OLIVE STREET PARKING FACILITY
GREENFIELD, MASSACHUSETTS

CONSTRUCTION DOCUMENTS - BID SET
SEPTEMBER 6, 2017

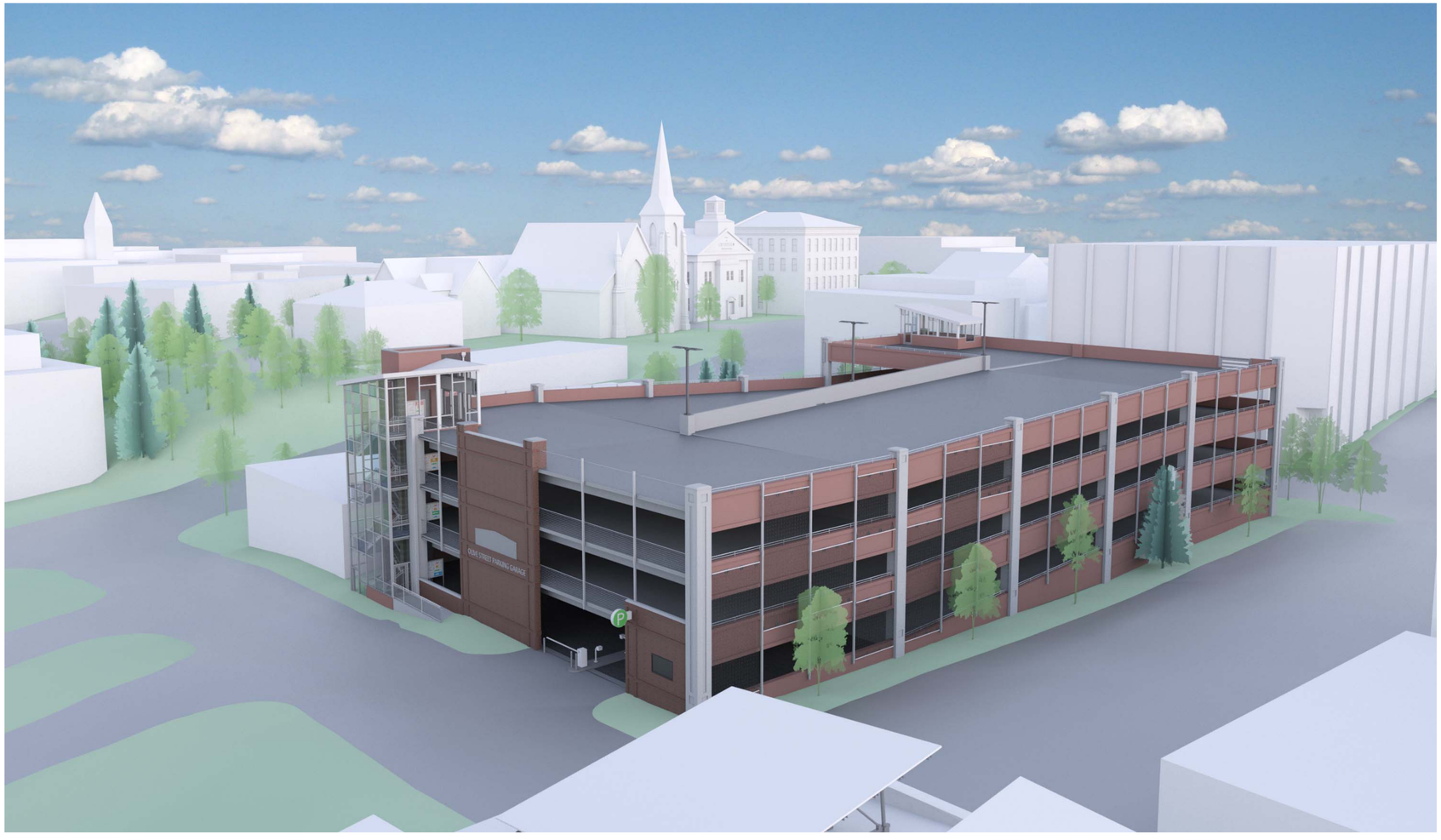

DESMAN Design Management

JWA JONES WHITSETT ARCHITECTS

SVE

edm

O'Reilly, Talbot & Okun [ASSOCIATES] ENGINEERING

VERMEULENS

DESMAN Design Management

Olive Street Parking Facility

Olive Street
Greenfield, MA

CONSTRUCTION DOCUMENTS - BID SET

ISSUE

NO.	DESCRIPTION	DATE

Copyright © 2017 DESMAN, Inc. All rights reserved. No part of these documents may be reproduced in any form or by any means without written permission from DESMAN, Inc.

DRAWING TITLE:
TITLE SHEET

DRAWING NO:
G000

SCALE:
DATE: 09/06/2017
PROJECT NO: 20-16105.01-1

DES.	DRWN.	CHK'D.
WJW	ALL	WTF

PROJECT DRAWING LIST

SHEET NUMBER:	SHEET NAME:	SCALE:	1/15/16 - 25% MASSWORKS PCKG	3/31/17 - DESIGN DEVELOPMENT PCKG	5/10/17 - PACKAGE 1: SITE UTILITY RELOCATION	5/10/17 - PACKAGE 2: PRECAST	5/23/17 - PACKAGE 3: FOUNDATION	6/2/17 - ADDENDUM 1: SITE, CIVIL, UTILITY & PRECAST	7/10/17 - 100% CONSTRUCTION DOCUMENTS	8/1/17 - 100% CONSTRUCTION DOCUMENTS - MOD. 1	8/23/17 - PERMIT SET (3)	09/06/17 - CONSTRUCTION DOCUMENTS - BID SET (5)
GENERAL												
G000	TITLE SHEET	AS INDICATED	X	X	X	X	X	X	X	X	X	X
G001	DRAWINGS LIST	AS INDICATED			X	X	X	X	X	X	X	X
CIVIL												
C1	STANDARD NOTES, LEGEND, & TABLE OF CONTENTS	AS INDICATED		X	X			X	X	X	X	X
C2	EXISTING CONDITION PLAN	1" = 20'-0"	X	X	X			X	X	X	X	X
C3	SITE PLAN	1" = 20'-0"	X	X	X			X	X	X	X	X
C4	GRADING PLAN	1" = 20'-0"	X	X	X			X	X	X	X	X
C5	UTILITY PLAN	1" = 20'-0"	X	X	X			X	X	X	X	X
C6	IMPROVEMENT PLAN - OLIVE STREET	AS INDICATED		X	X			X	X	X	X	X
C7	IMPROVEMENT PLAN - PROPOSED DRIVE	AS INDICATED		X	X			X	X	X	X	X
C8	IMPROVEMENT PLAN - ALLEY	AS INDICATED		X	X			X	X	X	X	X
C9	EROSION CONTROL	1" = 20'-0"		X	X			X	X	X	X	X
C10	DETAIL SHEET	AS INDICATED			X			X	X	X	X	X
C11	DETAIL SHEET	AS INDICATED			X			X	X	X	X	X
C12	DRY UTILITY PLAN	1" = 20'-0"									X	X
L1	LANDSCAPE PLAN	1" = 10'-0"			X			X	X	X	X	X
L2	LANDSCAPE PLAN	1" = 10'-0"			X			X	X	X	X	X
ARCHITECTURAL												
A001	CODE SUMMARY	AS INDICATED	X	X		X		X	X	X	X	X
A002	MOCK UP DETAILS	1" = 1'-0"				X		X	X	X	X	X
A101	GRADE LEVEL FLOOR PLAN	1/16" = 1'-0"	X	X		X		X	X	X	X	X
A102	SECOND LEVEL FLOOR PLAN	1/16" = 1'-0"	X	X		X		X	X	X	X	X
A103	THIRD LEVEL FLOOR PLAN	1/16" = 1'-0"	X	X		X		X	X	X	X	X
A104	ROOF LEVEL FLOOR PLAN	1/16" = 1'-0"	X	X		X		X	X	X	X	X
A201	EXTERIOR ELEVATIONS	1/8" = 1'-0"		X		X		X	X	X	X	X
A202	EXTERIOR ELEVATIONS	1/8" = 1'-0"		X		X		X	X	X	X	X
A203	ISOMETRIC VIEWS	AS INDICATED		X		X		X	X	X	X	X
A204	ELEVATION DETAILS	AS INDICATED		X		X		X	X	X	X	X
A205	ELEVATION DETAILS	AS INDICATED		X		X		X	X	X	X	X
A206	BAS-RELIEF DETAILS	AS INDICATED		X		X		X	X	X	X	X
A207	ROOF & CANOPY DETAILS	1 1/2" = 1'-0"				X		X	X	X	X	X
A208	SIGNAGE DETAILS	AS INDICATED				X			X	X	X	X
A301	INTERIOR SECTIONS	1/8" = 1'-0"		X		X		X	X	X	X	X
A302	EXTERIOR SECTIONS	1/8" = 1'-0"				X		X	X	X	X	X
A401	ENLARGED STAIR PLANS	1/4" = 1'-0"				X		X	X	X	X	X
A402	STAIR DETAILS	AS INDICATED				X			X	X	X	X
A501	CURTAIN WALL & STOREFRONT DETAILS	AS INDICATED				X			X	X	X	X
A502	DOOR SCHEDULE & MISC. DETAILS	AS INDICATED							X	X	X	X
A701	TYPICAL DETAILS	AS INDICATED							X	X	X	X

PROJECT DRAWING LIST

SHEET NUMBER:	SHEET NAME:	SCALE:	1/15/16 - 25% MASSWORKS PCKG	3/31/17 - DESIGN DEVELOPMENT PCKG	5/10/17 - PACKAGE 1: SITE UTILITY RELOCATION	5/10/17 - PACKAGE 2: PRECAST	5/23/17 - PACKAGE 3: FOUNDATION	6/2/17 - ADDENDUM 1: SITE, CIVIL, UTILITY & PRECAST	7/10/17 - 100% CONSTRUCTION DOCUMENTS	8/1/17 - 100% CONSTRUCTION DOCUMENTS - MOD. 1	8/23/17 - PERMIT SET (3)	09/06/17 - CONSTRUCTION DOCUMENTS - BID SET (5)
STRUCTURAL												
S001	GENERAL NOTES	AS INDICATED	X	X		X	X	X	X	X	X	X
S002	COLUMN LOADS AND BASE SHEAR DIAGRAM	1/16" = 1'-0"			X	X	X	X	X	X	X	X
S003	TYPICAL FOUNDATION DETAILS	AS INDICATED	X	X		X	X	X	X	X	X	X
S004	TYPICAL FOUNDATION DETAILS	AS INDICATED		X		X	X	X	X	X	X	X
S005	TYPICAL MASONRY DETAILS	AS INDICATED					X	X	X	X	X	X
S101	FOUNDATION PLAN	1/16" = 1'-0"	X	X	X	X	X	X	X	X	X	X
S102	FOUNDATION SECTIONS	AS INDICATED				X	X	X	X	X	X	X
S103	FOUNDATION SECTIONS	AS INDICATED					X	X	X	X	X	X
S104	FOUNDATION SECTIONS	AS INDICATED					X	X	X	X	X	X
S105	FOUNDATION ELEVATIONS	1/8" = 1'-0"				X	X	X	X	X	X	X
S106	FOUNDATION ELEVATIONS	1/8" = 1'-0"				X	X	X	X	X	X	X
S121	JUMP WALL DETAILS	AS INDICATED						X	X	X	X	X
S131	SHEAR WALL SECTIONS AND DETAILS	AS INDICATED							X	X	X	X
S140	SOUTH STAIR DETAILS	AS INDICATED							X	X	X	X
S201	SLAB-ON-GRADE PLAN	1/16" = 1'-0"	X	X		X	X	X	X	X	X	X
S202	TYPICAL LEVEL FRAMING PLAN	1/16" = 1'-0"	X	X		X		X	X	X	X	X
S203	ROOF LEVEL FRAMING PLAN	1/16" = 1'-0"	X	X		X		X	X	X	X	X
S301	TYPICAL PRECAST DETAILS	AS INDICATED	X	X		X		X	X	X	X	X
S302	TYPICAL PRECAST DETAILS	AS INDICATED	X	X		X		X	X	X	X	X
S303	TYPICAL PRECAST DETAILS	AS INDICATED	X	X		X		X	X	X	X	X
S401	SNOW GATE DETAILS	AS INDICATED	X	X		X		X	X	X	X	X
S402	ROOF STEEL DETAILS	AS INDICATED							X	X	X	X
S403	ROOF STEEL DETAILS	AS INDICATED									X	X
S404	TYPICAL BARRIER CABLE DETAILS	AS INDICATED							X	X	X	X
ELECTRICAL												
E-001	ELECTRICAL SYMBOLS, NOTES AND LEGENDS	AS INDICATED	X	X					X	X	X	X
E-002	ELECTRICAL SCHEDULES AND RISERS	AS INDICATED		X					X	X	X	X
E-003	ELECTRICAL SITE PLAN	AS INDICATED									X	X
E-111	GROUND FLOOR ELECTRICAL PLAN	AS INDICATED	X	X					X	X	X	X
E-121	SECOND LEVEL ELECTRICAL PLAN	1/16" = 1'-0"	X	X					X	X	X	X
E-131	THIRD LEVEL ELECTRICAL PLAN	1/16" = 1'-0"	X	X					X	X	X	X
E-141	ROOF LEVEL ELECTRICAL PLAN	1/16" = 1'-0"	X	X					X	X	X	X
FIRE PROTECTION												
FP001	FIRE PROTECTION NOTES, SYMBOLS, AND DETAILS	AS INDICATED	X	X					X	X	X	X
FP101	GROUND AND SECOND FLOOR PROTECTION PLANS	1/16" = 1'-0"		X					X	X	X	X
FP102	THIRD AND FOURTH FLOOR FIRE PROTECTION PLANS	1/16" = 1'-0"		X					X	X	X	X
HVAC												
H001	MECHANICAL LEGENDS, SCHEDULES AND DETAILS	AS INDICATED									X	X
H100	MECHANICAL GRADE LEVEL PLAN	1/16" = 1'-0"									X	X
H101	MECHANICAL ROOF LEVEL PLAN	1/16" = 1'-0"									X	X
PLUMBING												
P001	PLUMBING LEGENDS, SCHEDULES, AND DETAILS	AS INDICATED	X	X					X	X	X	X
P100	PLUMBING UNDERGROUND PLAN	1/16" = 1'-0"		X				X	X	X	X	X
P101	PLUMBING GRADE LEVEL PLAN	1/16" = 1'-0"	X	X					X	X	X	X
P102	PLUMBING SECOND LEVEL PLAN	1/16" = 1'-0"	X	X					X	X	X	X
P103	PLUMBING THIRD LEVEL PLAN	1/16" = 1'-0"	X	X					X	X	X	X
P104	PLUMBING ROOF LEVEL PLAN	1/16" = 1'-0"	X	X					X	X	X	X

DESMAN
Design Management

Olive Street Parking Facility

Olive Street
Greenfield, MA

CONSTRUCTION DOCUMENTS - BID SET

ISSUE

NO.	DESCRIPTION	DATE
5	CD - Bid Set	09/06/17
3	100% CD- MOD. 1	08/01/17

Copyright © 2017 DESMAN, Inc. All rights reserved. No part of these documents may be reproduced in any form or by any means without written permission from DESMAN, Inc.

DRAWING TITLE:
DRAWING LIST

DRAWING NO:
G001

SCALE: 1/8" = 1'-0"
DATE: 09/06/2017
PROJECT NO: 20-16105.01-1

DES.	DRWN.	CHK'D.
WJW	ALL	WTF

NOTES

GENERAL

1. APPROVAL OF THESE PLANS BY THE CITY/TOWN ENGINEER DOES NOT AUTHORIZE ANY WORK TO BE PERFORMED UNTIL A PERMIT/ A NOTICE TO PROCEED HAS BEEN ISSUED.

2. THE APPROVAL OF THIS PLAN OR ISSUANCE OF A PERMIT BY THE TOWN OF **GREENFIELD** DOES NOT AUTHORIZE THE SUBDIVIDER, OWNER AND CONTRACTOR TO VIOLATE ANY FEDERAL, STATE OR LOCAL LAWS, ORDINANCES, REGULATIONS, OR POLICIES. ALL IMPROVEMENTS (I.E. SEWER, WATER, DRAINAGE, ROAD, ETC.) SHALL CONFORM TO THE TOWN OF **GREENFIELD** CONSTRUCTION STANDARD SPECIFICATIONS AND DETAILS. ALL WORK MUST BE INSPECTED AND APPROVED BY THE DEPARTMENT OF PUBLIC WORKS PRIOR TO FINAL ACCEPTANCE.

3. THE CONTRACTOR SHALL BE RESPONSIBLE FOR SURVEY MONUMENTS AND/OR VERTICAL CONTROL BENCHMARKS WHICH ARE DISTURBED OR DESTROYED BY CONSTRUCTION. A LAND SURVEYOR MUST FIELD LOCATE, REFERENCE, AND/OR PRESERVE ALL HISTORICAL OR CONTROLLING MONUMENTS PRIOR TO ANY EARTHWORK. IF DESTROYED, A MASSACHUSETTS LICENSED LAND SURVEYOR SHALL REPLACE SUCH MONUMENTS WITH APPROPRIATE MONUMENTS AT NO COST TO THE OWNER, SUBDIVIDER AND/OR ENGINEER.

4. CONTRACTOR SHALL IMPLEMENT AN EROSION AND SEDIMENT CONTROL PROGRAM DURING THE PROJECT GRADING AND/OR CONSTRUCTION ACTIVITIES. THE PROGRAM SHALL MEET ALL APPLICABLE RE UIREMENTS OF THE STATE STORM WATER MANAGEMENT PLAN AND THE GENERAL PERMIT FOR CONSTRUCTION ACTIVITIES, NATIONAL POLLUTION DISCHARGE ELIMINATION SYSTEM (NPDES).

5. PUBLIC IMPROVEMENT SUBJECT TO DESUETUDE OR DAMAGE." IF REPAIR OR REPLACEMENT OF SUCH PUBLIC IMPROVEMENTS IS RE UIRED, THE OWNER SHALL OBTAIN THE RE UIRED PERMITS FOR WORK IN THE PUBLIC RIGHT-OF-WAY, SATISFACTORY TO THE PERMIT- ISSUING AUTHORITY.

6. PRIOR TO ANY DISTURBANCE TO THE SITE, EXCLUDING UTILITY MARK-OUTS AND SURVEYING, THE CONTRACTOR SHALL MAKE ARRANGEMENTS FOR A PRE-CONSTRUCTION MEETING WITH THE TOWN OF **GREENFIELD** AND SVE ASSOCIATES.

7. DEVIATIONS FROM THESE PLANS WILL NOT BE ALLOWED UNLESS A CONSTRUCTION CHANGE IS APPROVED BY THE CITY/TOWN ENGINEER AND SVE ASSOCIATES.

8. CONTRACTOR SHALL BE AWARE THAT THE UTILITIES SHOWN ARE APPROXIMATE AND ARE BASED ON AVAILABLE INFORMATION. OTHER UNKNOWN UTILITIES MAY LIKELY BE PRESENT THAT ARE NOT SHOWN ON THE PLAN. THE CONTRACTOR SHALL CONTACT, AT LEAST 72 HOURS PRIOR TO CONSTRUCTION, DIG SAFE, TOWN OF **GREENFIELD** PUBLIC WORKS DEPARTMENT, ELECTRIC AND TELEPHONE UTILITY SERVICE PROVIDER TO VERIFY THE LOCATIONS OF EXISTING UTILITIES PRIOR STARTING CONSTRUCTION. THE CONTRACTOR IS CAUTIONED TO PROCEED WITH CARE.

9. THE CONTRACTOR IS EXPECTED TO BE AWARE OF AND COMPLY WITH ALL PERMITS AND PERMIT CONDITIONS ASSOCIATED WITH THE PROJECT.

10. ALL TRENCHING, EXCAVATION, SHEETING, SHORING, ETC. SHALL COMPLY WITH THE MOST CURRENT OSHA REGULATIONS.

11. CONTRACTOR SHALL VERIFY INVERT ELEVATIONS OF ALL PIPES AND STRUCTURES PRIOR TO START OF CONSTRUCTION. THE CONTRACTOR SHALL NOTIFY SVE ASSOCIATES IF FIELD CONDITIONS VARY FROM THAT SHOWN ON THE PLAN(S)

12. IN CASE OF CONFLICTS BETWEEN SPECIFICATION, THE MOST STRINGENT INTERPRETATION OF THE PLANS, SPECIFICATIONS, LOCAL OR STATE REGULATION, OR PERMIT CONDITIONS SHALL APPLY

13. CONTRACTOR WILL BE RESPONSIBLE FOR ALL CONSTRUCTION LAYOUT. LAYOUT SHALL BE PERFORMED BY A LICENSED SURVEYOR OR LICENSED ENGINEER

14. CONTRACTOR SHALL PROVIDE A FULL SET OF AS-BUILT DRAWING TO THE OWNER WITH SWING TIE COORDINATES, LOCATING ALL VALVES, FITTINGS, CORPORATIONS, STRUCTURES, PIPES, ETC. THE AS-BUILTS BUILT SHALL INDICATE MATERIALS, PIPE LENGTHS INSTALLED, ALL INVERTS, AND ALL STRUCTURE ELEVATIONS. ACCEPTANCE OF THE WORK IS SUBJECT TO ACCEPTANCE OF THE AS-BUILTS BY THE ENGINEER AND OWNER.

15. ALL SURFACES SHALL BE GRADED TO DRAIN.

16. THE CONTRACTOR SHALL RESTORE ALL DISTURBED SURFACES TO THEIR ORIGINAL CONDITION OR BETTER AND EXISTING PIPES AND STRUCTURES SHALL BE CLEANED. ALL SIGNS SHALL BE REPLACED. ALL DAMAGED VEGETATION REPLACED.

EROSION AND SEDIMENT CONTROL

1. PROVIDE GRAVEL BAG CHEVRONS IMMEDIATELY UPSTREAM OF DRAINAGE INLETS AS INDICATED ON DETAILS.

2. THE CONTRACTOR OR UALIFIED PERSON SHALL BE RESPONSIBLE FOR CLEANUP OF SILT AND MUD ON ADJACENT STREET(S) AND STORM DRAIN SYSTEM DUE TO CONSTRUCTION ACTIVITY.

3. THE CONTRACTOR OR UALIFIED PERSON SHALL CHECK AND MAINTAIN ALL LINED AND UNLINED DITCHES AFTER EACH RAINFALL.

4. THE CONTRACTOR SHALL REMOVE SILT AND DEBRIS AFTER EACH MAJOR RAINFALL (0.2" OR GREATER).

5. UIPMENT AND WORKERS FOR EMERGENCY WORK SHALL BE MADE AVAILABLE AT ALL TIMES. ALL NECESSARY MATERIALS SHALL BE STOCKPILED ON SITE AT CONVENIENT LOCATIONS TO FACILITATE RAPID CONSTRUCTION OF TEMPORARY DEVICES WHEN RAIN IS IMMINENT.

6. THE CONTRACTOR SHALL RESTORE ALL EROSION/SEDIMENT CONTROL DEVICES TO WORKING ORDER TO THE SATISFACTION OF THE **TOWN** CONSERVATION COMMISSION.

7. THE CONTRACTOR SHALL INSTALL ADDITIONAL EROSION/SEDIMENT CONTROL MEASURES AS MAY BE RE UIRED BY THE CITY/TOWN ENGINEER DUE TO UNCOMPLETED GRADING OPERATIONS OR UNFORESEEN CIRCUMSTANCES, WHICH MAY ARISE.

8. THE CONTRACTOR SHALL BE RESPONSIBLE AND SHALL TAKE NECESSARY PRECAUTIONS TO PREVENT PUBLIC TRESPASS ONTO AREAS WHERE IMPOUNDED WATERS CREATE A HAZARDOUS CONDITION.

9. GRADED AREAS AROUND THE PROJECT PERIMETER MUST DRAIN AWAY FROM THE FACE OF THE SLOPE AT THE CONCLUSION OF EACH WORKING DAY.

10. ALL REMOVABLE PROTECTIVE DEVICES SHOWN SHALL BE IN PLACE AT THE END OF EACH WORKING DAY WHEN RAIN IS IMMINENT.

11. THE CONTRACTOR SHALL ONLY GRADE, INCLUDING CLEARING AND GRUBBING FOR THE AREAS FOR WHICH THE CONTRACTOR OR UALIFIED PERSON CAN PROVIDE EROSION/SEDIMENT CONTROL MEASURES.

12. DISCHARGING SEDIMENT-LADEN WATER INTO ANY RECEIVING WATER OR STORM DRAIN WITHOUT FILTRATION OR E UIVALENT TREATMENT IS PROHIBITED.

13. THE DISCHARGER SHALL AMEND THE SWPPP WHENEVER THERE IS A CHANGE IN CONSTRUCTION OR OPERATIONS, WHICH MAY AFFECT THE DISCHARGE OF POLLUTANTS TO SURFACE WATERS, GROUNDWATER, OR A MUNICIPAL STORM DRAIN SYSTEM. THE SWPPP SHALL ALSO BE AMENDED IF THE DISCHARGER VIOLATES ANY CONDITION OF THE GENERAL PERMIT OR HAS NOT ACHIEVED THE GENERAL OBJECTIVE OF REDUCING OR ELIMINATING POLLUTANTS IN STORM WATER DISCHARGES. ALL AMENDMENTS SHOULD BE DATED AND DIRECTLY ATTACHED TO THE SWPPP.

14. SEDIMENT CONTROL BMP'S ARE RE UIRED AT APPROPRIATE LOCATIONS ALONG THE SITE PERIMETER AND AT ALL OPERATIONAL INTERNAL INLETS TO THE STORM DRAIN SYSTEM AT ALL TIMES.

15. THE OUTLETS OF ALL SEDIMENT BASINS, TRAPS, AND LOCATIONS OF ARTIFICIALLY CONCENTRATED FLOW SHALL BE PROVIDED WITH OUTLET PROTECTION TO PREVENT EROSION AND SCOUR.

16. INSPECTIONS BY THE CONTRACTOR SHALL BE PERFORMED BEFORE AND AFTER STORM EVENTS AND ONCE EACH 24-HOUR PERIOD DURING EXTENDED STORM EVENTS TO IDENTIFY BMP EFFECTIVENESS AND IMPLEMENT REPAIRS OR DESIGN CHANGES AS SOON AS FEASIBLE, DEPENDING ON FIELD CONDITIONS. E UIPMENT, MATERIALS, AND WORKERS MUST BE AVAILABLE FOR RAPID RESPONSE TO FAILURES AND EMERGENCIES. ALL CORRECTIVE MAINTENANCE TO BMP'S SHALL BE PERFORMED AS SOON AS POSSIBLE AFTER THE CONCLUSION OF EACH STORM, DEPENDING UPON WORKER SAFETY.

17. THE CONTRACTOR SHALL MAINTAIN A COPY OF THE SWPPP AT THE CONSTRUCTION SITE.

18. A CONCRETE WASHOUT SHALL BE INSTALLED FOR ALL PROJECTS THAT PROPOSE CONCRETE TO BE MIXED ON SITE OR DELIVERED FROM A BATCH PLANT. THE CONCRETE WASHOUT SHALL BE LOCATED A MINIMUM OF 50' FROM ANY DRAINAGE INFRASTRUCTURE OR NATURAL DRAINAGE FEATURES OR WATER BODIES AND INCORPORATE AN IMPERMEABLE LINER (6 MIL MIN) TO CONTAIN THE RE UIRED VOLUME. ALL DRIED CONCRETE WASTE SHALL BE BROKEN INTO MANAGEABLE PIECES AND DISPOSED OF IN A PROPER MANNER.

WORK TO BE DONE

THE IMPROVEMENTS CONSIST OF THE FOLLOWING WORK TO BE DONE ACCORDING TO THESE PLANS AND THE SPECIFICATIONS AND STANDARD DRAWINGS OF THE TOWN OF **GREENFIELD.**

DIG SAFE

OTHER UNKNOWN UTILITIES MAY LIKELY BE PRESENT THAT ARE NOT SHOWN ON THE PLAN.
THE CONTRACTOR SHALL CONTACT (1-888-DIG-SAFE) AT LEAST 72 HOURS PRIOR TO CONSTRUCTION

NPDES NOTE

IN ACCORDANCE WITH THE CLEAN WATER ACT THIS PROJECT IS RE UIRED TO OBTAIN COVERAGE UNDER THE NATIONAL POLLUTION DISCHARGE ELIMINATION SYSTEM (N.P.D.E.S.). A NOTICE OF INTENT SHALL BE FILED WITH THE E.P.A.AND A STORM WATER POLLUTION PREVENTION PLAN SHALL BE RE UIRED PRIOR TO CONSTRUCTION.

STANDARD SPECIFICATIONS

1. STANDARD SPECIFICATIONS FOR PUBLIC WORKS CONSTRUCTION (2006 EDITION)

2. MANUAL ON UNIFORM TRAFFIC CONTROL DEVICES (MUTCD) FOR STREETS AND HIGHWAYS (2003 EDITION).

3. STANDARD SPECIFICATIONS FOR HIGHWAYS AND BRIDGES, MASSACHUSETTS HIGHWAY DEPARTMENT (CURRENT EDITION).

4. STANDARD SPECIFICATIONS FOR TOWN OF **GREENFIELD.**

BENCHMARK DATA

(2) BENCHMARK(S) EXIST ON THE SITE THEY ARE BASED ON **ASSUMED DATUM.**

BENCHMARK #1
LOCATION DESCRIPTION: **NAIL IN NORTH SIDE OF UTILITY POLE ALONG THE NORTH SIDE OF OLIVE STREET ON THE WEST SIDE OF THE DRIVEWAY ENTRANCE TO THE RECORDER PARKING LOT**
POINT DESCRIPTION: **BERKSHIRE DESIGN**
ELEVATION: **218.00**

BENCHMARK #2
LOCATION DESCRIPTION: **THE TOP OF THE SPINDLE OF THE FIRE HYDRANT ON OLIVE STREET, IN FRONT OF KAREN'S DANCE STUDIO.**
POINT DESCRIPTION: **SPINDLE**
ELEVATION: **213.24**

NOTES

TOPOGRAPHIC & BOUNDARY INFORMATION

TOPOGRAPHIC AND BOUNDARY INFORMATION BASED ON DRAWING PROVIDED BY BERKSHIRE DESIGN GROUP, INC. ENTITLED: "PLAN OF LAND IN GREENFIELD, MA PREPARED FOR THE TOWN OF GREENFIELD" DATED APRIL 27, 2009

TOPOGRAPHIC INFORMATION SUPPLEMENTED BY TOPOGRAPHIC SURVEY CONDUCTED BY SVE ASSOCIATES ON JANUARY 20, 2015.

FLOOD PLAIN INFORMATION

PROPERTY AS SHOWN LIES WITHIN FLOOD INSURANCE RATE MAP REFERENCED DIRECTLY BELOW AS PREPARED BY THE FEDERAL EMERGENCY MANAGEMENT AGENCY (FEMA):

NUMBER **250118 0008 B**, DATED **07/02/1980**.

THE SUBJECT PROPERTY IS LOCATED WITHIN ZONE **"C."**

GENERAL PROPERTY INFORMATION

ZONING DESIGNATION: **CENTRAL COMMERCIAL - CC**

THE TOWN OF GREENFIELD
14 COURT S UARE
GREENFIELD, MA 01300

LEGAL DESCRIPTION(S): LOT 16 & 23 BK.: 1483, PG.: **207**
LOT 21 & 22 BK.: 1445, PG.: **99**
LOT 120 BK.: 5656, PG.: **65** - SEE REFERENCE PLAN 11

RE UIRED:		PROVIDED:	
MIN. LOT AREA	- S.F.	LOT AREA	**0.862 ACRES**
MIN. FRONTAGE	**0'**	MIN. FRONTAGE	**200'±**
FRONT SETBACK	**0'**	FRONT SETBACK	**0'**
SIDE SETBACK	**0'**	SIDE SETBACK	**1.5'**
REAR SETBACK	**0'**	REAR SETBACK	**N/A**
MAX. BUILDING HEIGHT	**50'**	MAX. BUILDING HEIGHT	**56.8' AVERAGE**
OPEN SPACE	**15%**	OPEN SPACE	**19.6%**

GEOTECHNICAL INFORMATION

GEOTECHNICAL INFORMATION BELOW IS FROM A GEOTECHNICAL REPORT ENTITLED: "GEOTECHNICAL ENGINEERING RECOMMENDATIONS NEW PARKING GARAGE OLIVE STREET GREENFIELD, MA" PREPARED BY O'REILLY, TALBOT & OKUN ENGINEERING ASSOCIATES DATED FEBRUARY 23, 2017 FOR DESMAN ASSOCIATES. CONTRACTOR SHALL REVIEW AND PERFORM WORK IN ACCORDANCE WITH RECOMMENDATIONS PRESENTED WITHIN REPORT.

Table 1-1
Degree of Compaction Recommendations

Location	Minimum Compaction
Below Structures (Foundations and Slabs)	95%
Below Pavements/Sidewalks/Exterior Slabs	95%
Against Basement Walls/Retaining Walls	92%
Utility Trenches	95%
General Landscaped Areas	90%

Notes.
1. Percentage of the maximum dry density as determined by Modified Proctor ASTM D1557, Method C.
2. When location falls into two or more categories, the engineer should be notified to determine appropriate compaction efforts and/or methods.
3. Crushed stone should be compacted in lifts of 12 inches to form a dense matrix using either traditional compaction methods (vibratory plate and/or roller) or tamping with an excavator bucket in deep excavations. It is generally not necessary to perform laboratory or field density testing on crushed stone.

Table 3
Pavement Design Sections

Layer	Thickness
Asphalt Finish Course	2 inches
Asphalt Binder Course	2 inches
Gravel Base Course	10 inches
Sand & Gravel Sub-base	8 inches

Table 1-2
General Guidelines for Compaction Means and Methods

Compaction Method	Maximum Stone Size (Inches Diameter)	Maximum Lift Thickness (Inches)		Minimum Number of Passes	
		Below Structures & Pavement	Non-Critical Areas	Below Structures & Pavement	Non-Critical Areas
Hand-operated Vibratory Plate and confined spaces	3	6	8	6	4
Hand-operated vibratory drum roller (less than 1000 pounds)	3	6	8	6	4
Hand-operated vibratory drum roller (at least 1,000 pounds)	6	8	10	6	4
Light vibratory drum roller (minimum 3000 pounds)	6	10	14	6	4
Heavy vibratory drum roller (minimum 6000 pounds)	6	12	18	6	4

Note: The contractor should reduce or stop drum vibration if pumping of the subgrade is observed.

Table 4
Grain Size Distribution Requirements

Size	Sand and Gravel	Gravel Base Course	Granular Fill	Crushed Stone
	Percent Finer by Weight			
4 inch	100	100	100	100
1 inch	---	---	---	100
3/4 inch	---	---	---	90-100
1/2 inch	50-85	50-80	---	10-50
3/8 inch	---	---	---	0-20
No. 4	40-75	40-75	---	0-5
No. 10	---	30-60	30-90	---
No. 40	10-35	10-35	10-70	---
No. 100	---	5-20	---	---
No. 200	0-8	2-10	0-15	---

SYMBOL LEGEND

SECTIONS

NAME
A
1
SHEET ON WHICH SECTION IS FOUND
DIRECTION OF VIEW

LINE TYPES

PROPOSED (DARK) — EXISTING (LIGHT)

LIMIT OF GRADING
PROPOSED MAJOR CONTOUR (320)
PROPOSED MINOR CONTOUR
EXISTING MAJOR CONTOUR (320)
EXISTING MINOR CONTOUR
PROPERTY LINE
ABUTTER LINE
EASEMENT LINE
PROPERTY LINE SETBACK
BARBED WIRE FENCE
CHAIN LINK FENCE
STOCKADE FENCE
STONE WALL
TREELINE
SEWER LATERAL (S)
WATER SERVICE (W)
DRAINAGE LINE (D)
GAS MAIN (G)
WATER MAIN (W)
TELEPHONE LINE (T)
ELECTRIC POWER LINE
OVERHEAD UTILITIES (OH)
SANITARY SEWER LINE (SS)
SANITARY SEWER LINE WITH DIRECTION (SS)
STREAM OR BROOK
EDGE OF WATER (DOTS TOWARD WATER)
MEAN ANNUAL HIGH WATER LINE (MAHW)
REGULATORY SETBACK
SILT FENCE
FILTER SOCKS
FIBER ROLLS
GRAVEL BAGS
HAYBALES

MISCELLANEOUS

BONDED FIBER MATRIX WITH HYDROSEED
SPOT ELEVATION (123.45)
STRAW MAT
TOP OF WALL ELEV (95.5) / FINISH GROUND ELEV AT TOE OF WALL (94.0)
RIP RAP
SLOPE DART
ROCK DAM
DRAINAGE FLOW ARROW

EXIST	POINTS	PROP	EXIST	POINTS	PROP
	GUY POLE/WIRE			MONUMENT	
	LIGHT POLE			IRON PIN/PIPE/ROD	
M	METER	M		UNMARKED POINT	
E	ELECTRICAL BOX	E		BENCHMARK	
T	CABLE TV BOX	T	S	SEWER MANHOLE	S
	TELEPHONE PEDESTAL		D	DRAINAGE MANHOLE	D
U	UTILITY BOX	U	T	TELEPHONE MANHOLE	T
	UTILITY VAULT		E	ELECTRICAL MANHOLE	E
W	WATER WELL	W	W	WATER MANHOLE	W
	SIGN			UNKNOWN MANHOLE	
	MONITORING WELL			CATCH BASIN	
TP	TEST PIT	TP	L	LEACHING BASIN	
PT	PERC TEST	PT	WV	WATER VALVE	WV
	BORING		GV	GAS VALVE	GV
	WETLANDS FLAG			FIRE HYDRANT	
M	MAIL BOX	M		UTILITY POLE	

ABBREVIATIONS

IP	IRON PIPE / PIN
GMON	GRANITE MONUMENT
CMON	CONCRETE MONUMENT
MHB	MASSACHUSETTS HIGHWAY BOUND
DH	DRILL HOLE
P.I.L.	PIN IN LEAD
PCB	PROPOSED CATCH BASIN
PLB	PROPOSED LEACHING BASIN
PDMH	PROPOSED DRAINAGE MANHOLE
PSMH	PROPOSED SANITARY SEWER MANHOLE
PTMH	PROPOSED TELECOMM MANHOLE
PEMH	PROPOSED ELECTRIC MANHOLE
WM	WATER MAIN
GAS	GAS MAIN / LINE
SS	SANITARY SEWER
STM	STORM / DRAINAGE SEWER
OHD	OVERHEAD
UGD	UNDERGROUND
CB	EXISTING CATCH BASIN
LB	EXISTING LEACHING BASIN
DMH	EXISTING DRAINAGE MANHOLE
SMH	EXISTING SEWER MANHOLE
TMH	EXISTING TELECOMM MANHOLE
EMH	EXISTING ELECTRIC MANHOLE
MH	UNKNOWN MANHOLE
INV / IE	INVERT / INVERT ELEVATION
TG	TOP OF GRATE ELEVATION
RIM	STRUCTURE RIM ELEVATION
FL	FLOW LINE ELEVATION
HDPE	HIGH DENSITY POLYETHYLENE PIPE
RCP	REINFORCED CONCRETE PIPE
PVC	POLYVINYL CHLORIDE PIPE
CMP	CORRUGATED METAL PIPE
ACCMP	ASPHALT COATED CORRUGATED METAL PIPE
VC	VITREOUS CLAY PIPE
AC	ASBESTOS CONCRETE PIPE (TRANSITE)
DI	DUCTILE IRON PIPE
PROP	PROPOSED
EXIST	EXISTING
CONC	CONCRETE
RET	RETAINING
ROW	RIGHT-OF-WAY
CL	CENTERLINE
EL	ELEVATION
EOP / EP	EDGE OF PAVEMENT
BB	BITUMINOUS BERM CURBING
GC	GRANITE CURBING
CC	CONCRETE CURBING
TYP	TYPICAL
N/F	NOW OR FORMERLY
W/F	WOOD FRAME
TBM	TEMPORARY BENCHMARK
BM	BENCHMARK
PL	PROPERTY LINE
EASE	EASEMENT / EASEMENT LINE
SETB	PROPERTY / LOT LINE SETBACK LINE
WET	WETLAND
BVW	BORDERING VEGETATED WETLAND
RA	RIVER FRONT RESOURCE AREA
EOW	EDGE OF WATER
EOWET	EDGE OF WETLANDS
MAHW	MEAN ANNUAL HIGH WATER
WETSET	WETLAND SETBACK LINE
PT	PERCOLATION TEST SITE
TP	SOIL TEST PIT
BOR	BORING
MW	MONITOR WELL
SF	SILTFENCE
CHLF	CHAIN LINK FENCE
STOCK	STOCKADE FENCE
BWF	BARBED WIRE FENCE
STWL	STONE WALL

TABLE OF CONTENTS

STANDARD NOTES, LEGEND, & TABLE OF CONTENTS — SHEET C1
EXISTING CONDITIONS PLAN — SHEET C2
PROPOSED SITE PLAN — SHEET C3
GRADING PLAN — SHEET C4
UTILITY PLAN — SHEET C5
IMPROVEMENT PLAN OLIVE STREET — SHEET C6
IMPROVEMENT PLAN RECORDER PARKING LOT — SHEET C7
IMPROVEMENT PLAN ALLEY — SHEET C8
EROSION CONTROL PLAN — SHEET C9
DETAIL SHEET — SHEET C10
DETAIL SHEET — SHEET C11
DRY UTILITY PLAN — SHEET C12
LANDSCAPE PLAN — SHEET L1
LANDSCAPE PLAN — SHEET L2

COMMONWEALTH OF MASSACHUSETTS
ANTHONY WONSESKI JR.
CIVIL
No. 46615
REGISTERED PROFESSIONAL ENGINEER

ANTHONY WONSESKI, JR. DATE
R.C.E. NUMBER: 46615

DESMAN Design Management
SVE
Engineering
Planning
Landscape Architecture
Surveying

SVE Associates
PO Box 1818
439 West River Road
Brattleboro, VT 05302
T 802.257.0561
F 802.257.0721
www.sveassoc.com

Olive Street Parking Facility

Olive Street
Greenfield, MA

CONSTRUCTION DOCUMENTS - BID SET

ISSUE

NO.	DESCRIPTION	DATE
5	CD - BID SET	09/06/17
4	Permit Set	08/23/17
3	100% CD	7/10/17
2	ADDENDUM 1	6/2/17
1	PKG - 1	5/10/17

Copyright © 2017 DESMAN, Inc. All rights reserved. No part of these documents may be reproduced in any form or by any means without written permission from DESMAN, Inc.

DRAWING TITLE:
STANDARD NOTES, LEGEND, & TABLE OF CONTENTS

DRAWING NO:
C1

SCALE: As indicated
DATE: 09/06/2017
PROJECT NO: 20-16105.01-1

DES.	DRWN.	CHK'D.
AW	MJS	AW

Drawing name: P: Project G1605 Gfld Municipal Garage Dwg Concepts G1605-100% CONSTRUCTION DWG.REV 4 - 8-23-17.dwg Sep 05, 2017 - 11:19am

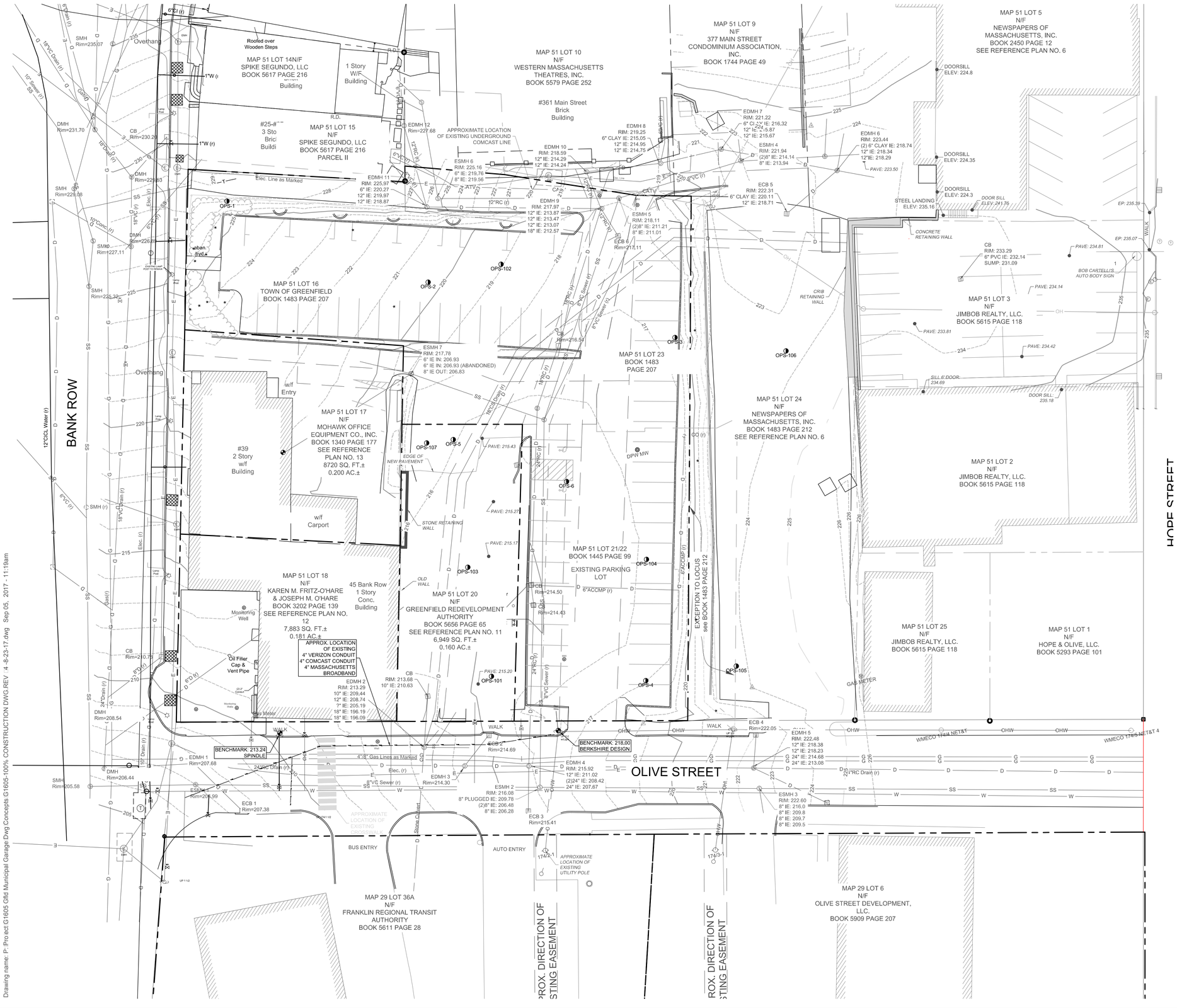

GENERAL PROPERTY INFORMATION

OWNER: THE TOWN OF GREENFIELD
14 COURT S□UARE
GREENFIELD, MA 01301

LEGAL DESCRIPTION(S): LOT 16 & 23 BK.: 1483, PG.: **207**
LOT 21 & 22 BK.: 1445, PG.: **99**
LOT 120 BK.: 5656, PG.: **65** - SEE REFERENCE PLAN □11

ASSESSOR PARCEL NUMBER(S): MAP **51** LOTS: **16, 20, 21, 22, 23**

TOPOGRAPHIC & BOUNDARY INFORMATION

TOPOGRAPHIC AND BOUNDARY INFORMATION BASED ON DRAWING PROVIDED BY BERKSHIRE DESIGN GROUP, INC. ENTITLED: "PLAN OF LAND IN GREENFIELD, MA PREPARED FOR THE TOWN OF GREENFIELD" DATED APRIL 27, 2009

TOPOGRAPHIC INFORMATION SUPPLEMENTED BY TOPOGRAPHIC SURVEY CONDUCTED BY SVE ASSOCIATES ON JANUARY 20, 2015.

FLOOD PLAIN INFORMATION

PROPERTY AS SHOWN LIES WITHIN FLOOD INSURANCE RATE MAP REFERENCED DIRECTLY BELOW AS PREPARED BY THE FEDERAL EMERGENCY MANAGEMENT AGENCY (FEMA):

NUMBER **250118 0008 B**, DATED **07/02/1980**.

THE SUBJECT PROPERTY IS LOCATED WITHIN ZONE "**C**."

ZONING DESIGNATION: **CENTRAL COMMERCIAL - CC**

RE□UIRED:		PROVIDED:	
MIN. LOT AREA	- S.F.	LOT AREA	**0.862 ACRES**
MIN. FRONTAGE	**0'**	MIN. FRONTAGE	**200'±**
FRONT SETBACK	**0'**	FRONT SETBACK	**0'**
SIDE SETBACK	**0'**	SIDE SETBACK	**1.5'**
REAR SETBACK	**0'**	REAR SETBACK	**N/A**
MAX. BUILDING HEIGHT	**50'**	MAX. BUILDING HEIGHT	**56.8 AVERAGE**
OPEN SPACE	**15%**	OPEN SPACE	**19.6%**

GEOTECHNICAL INFORMATION

GEOTECHNICAL INFORMATION BASED OFF OF A GEOTECHNICAL REPORT ENTITLED: "GEOTECHNICAL ENGINEERING RECOMMENDATIONS NEW PARKING GARAGE OLIVE STREET GREENFIELD, MA" PREPARED BY O'REILLY, TALBOT & OKUN ENGINEERING ASSOCIATES DATED FEBRUARY 23, 2017 FOR DESMAN ASSOCIATES

BORING LOCATIONS ARE APPROXIMATE BASED ON SITE PLAN PROVIDED WITHIN THE GEOTECHNICAL REPORT PREPARED BY O'REILLY, TALBOT & OKUN. PLEASE SEE REFERENCED GEOTECHNICAL REPORT FOR BORING LOGS.

NOTE:

EXISTING FOUNDATION FROM DEMOLISHED BUILDING ON LOT 20 PRESENT ALONG THE BUILDING OF KAREN'S DANCE STUDIO & MOHAWK OFFICE E□UIPMENT.

DESMAN
Design Management
SVE
Engineering
Planning
Landscape Architecture
Surveying

SVE Associates
PO Bo□ 1818
439 West River Road
Brattleboro, VT 05302
T 802.257.0561
F 802.257.0721
www.sveassoc.com

Olive Street Parking Facility

Olive Street
Greenfield, MA

CONSTRUCTION DOCUMENTS - BID SET

ISSUE

NO.	DESCRIPTION	DATE
5	CD - SET	09/06/17
4	Permit Set	08/23/17
3	100% CD	7/10/17
2	ADDENDUM 1	6/2/17
1	PKG - 1	5/10/17

Copyright © 2017 DESMAN, Inc. All rights reserved. No part of these documents may be reproduced in any form or by any means without written permission from DESMAN, Inc.

COMMONWEALTH OF MASSACHUSETTS
ANTHONY WONSESKI JR.
CIVIL
No. 46615
REGISTERED PROFESSIONAL ENGINEER

ANTHONY WONSESKI, JR. DATE
R.C.E. NUMBER: 46615

DRAWING TITLE:

EXISTING CONDITION PLAN

0 10 20 40
GRAPHIC SCALE 1" = 20'

SVE PROJ. □:
G1605

N
NORTH

DRAWING NO:

C2

SCALE:	As indicated
DATE:	09/06/2017
PROJECT NO:	20-16105.01-1

DES.	DRWN.	CHK'D.
AW	MJS	AW

Drawing name: P: Project G1605 Gfld Municipal Garage Dwg Concepts G1605-100% CONSTRUCTION DWG.REV 4 - 8-23-17.dwg Sep 05, 2017 - 11:19am

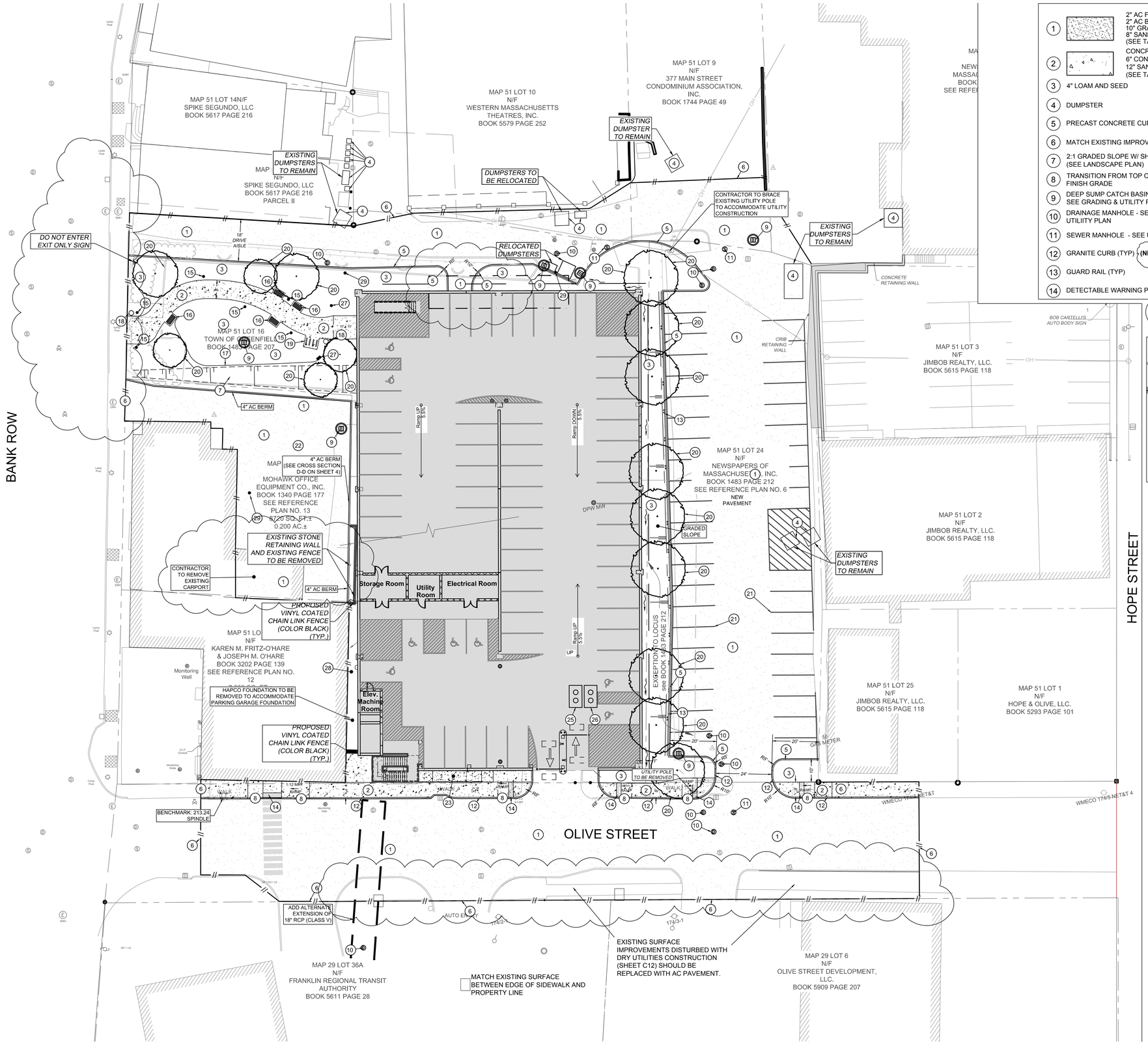

1. 2" AC FINISH
   2" AC BINDER
   10" GRAVEL BASE
   8" SAND & GRAVEL SUB BASE
   (SEE TABLE 4 SHEET C1)
2. CONCRETE WALK
   6" CONCRETE (4000 PSI)
   12" SAND & GRAVEL BASE
   (SEE TABLE 4 SHEET C1)
3. 4" LOAM AND SEED
4. DUMPSTER
5. PRECAST CONCRETE CURB (TYP)
6. MATCH EXISTING IMPROVEMENTS
7. 2:1 GRADED SLOPE W/ SHRUB COVERAGE (SEE LANDSCAPE PLAN)
8. TRANSITION FROM TOP OF CURB TO FINISH GRADE
9. DEEP SUMP CATCH BASIN - SEE GRADING & UTILITY PLAN
10. DRAINAGE MANHOLE - SEE GRADING & UTILIITY PLAN
11. SEWER MANHOLE - SEE UTILITY PLAN
12. GRANITE CURB (TYP) (NIC)
13. GUARD RAIL (TYP)
14. DETECTABLE WARNING PANEL (TYP)
15. LIGHTED BOLLARD (TYP) (2) IN CONTRACT
16. BENCH (TYP) - (NIC)
17. TOP OF SLOPE
18. TRASH RECEPTACLE (TYP) (1) IN CONTRACT
19. BICYCLE RACK
20. TREES (TYP.) (SEE LANDSCAPE PLANS L1 & L2)
21. PAVEMENT STRIPING (TYP.)
22. OFFSITE STORM DRAIN IMPROVEMENT & PAVEMENT REPAIR
23. CONCRETE RAMP WITH PEDESTRIAN RAILING
24. PAVEMENT REPAIR
25. OIL/WATER SEPARATOR FOR OPEN AREA STORMWATER RUNOFF (SEE PLUMBING PLAN)
26. OIL/WATER SEPARATOR FOR COVERED AREA STORMWATER RUNOFF (SEE PLUMBING PLAN)
27. UPLIGHT - (NIC)
28. AC PAVED SWALE
29. SDR-35 SEWER CLEAN OUT - SEE UTILITY PLAN

NIC = DENOTES NOT IN CONTRACT - BY OTHERS

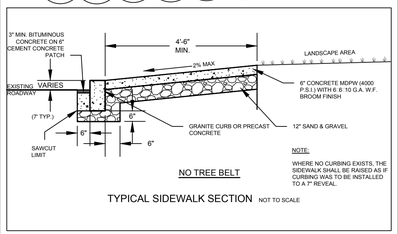

TYPICAL SIDEWALK SECTION NOT TO SCALE

CM SCOPE OF SERVICE ADJUSTMENT NOTE:
GRANITE CURB, CONCRETE SIDE WALKS WITHIN THE OLIVE STREET PUBLIC RIGHT-OF-WAY AND TOP COURSE OF PAVEMENT ARE NOT IN CM SCOPE OF SERVICES. THESE ITEMS OF WORK ARE TO BE PERFORMED BY OTHERS.

DESMAN
Design Management

SVE
Engineering
Planning
Landscape Architecture
Surveying

SVE Associates
PO Box 1818
439 West River Road
Brattleboro, VT 05302
T 802.257.0561
F 802.257.0721
www.sveassoc.com

Olive Street Parking Facility

Olive Street
Greenfield, MA

CONSTRUCTION DOCUMENTS - BID SET

ISSUE

NO.	DESCRIPTION	DATE
5	CD - BID SET	09/06/17
4	Permit Set	08/23/17
3	100% CD	7/10/17
2	ADDENDUM 1	6/2/17
1	PKG - 1	5/10/17

Copyright © 2017 DESMAN, Inc. All rights reserved. No part of these documents may be reproduced in any form or by any means without written permission from DESMAN, Inc.

COMMONWEALTH OF MASSACHUSETTS
ANTHONY WONSESKI JR.
CIVIL
No. 46615
REGISTERED PROFESSIONAL ENGINEER

ANTHONY WONSESKI, JR. DATE
R.C.E. NUMBER: 46615

DRAWING TITLE:

SITE PLAN

0 10 20 40
GRAPHIC SCALE 1" = 20'

SVE PROJ. G1605

N
NORTH

DRAWING NO:

C3

SCALE: As indicated
DATE: 09/06/2017
PROJECT NO: 20-16105.01-1

DES.	DRWN.	CHK'D.
AW	MJS	AW

Drawing name: P:\Project G1605 Gfld Municipal Garage\Dwg Concepts G1605-100% CONSTRUCTION DWG.REV 4-8-23-17.dwg Sep 05, 2017 - 11:19am

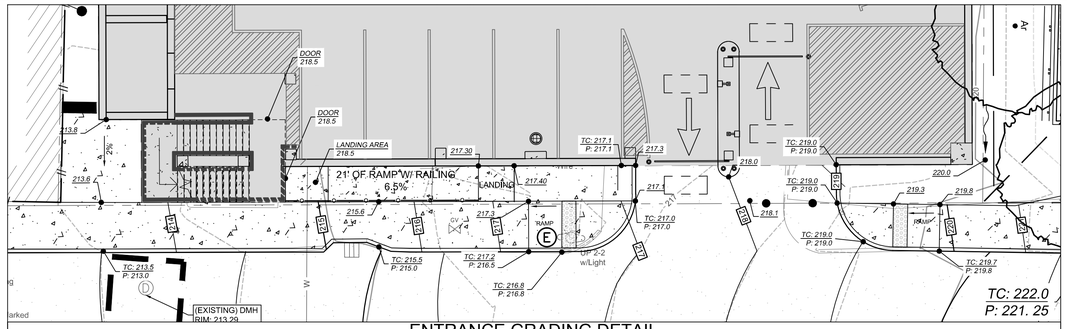

ENTRANCE GRADING DETAIL

SCALE: 1" = 10'

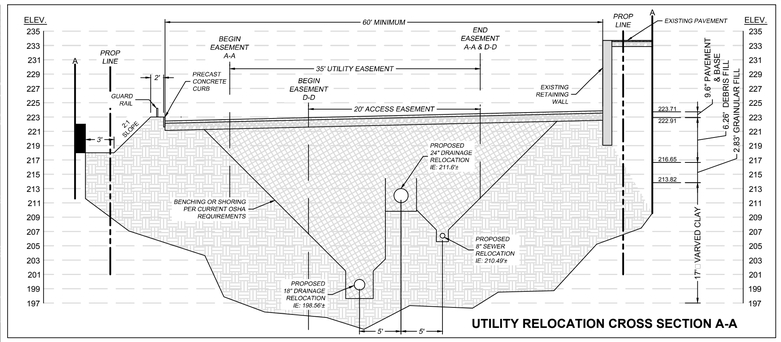

UTILITY RELOCATION CROSS SECTION A-A

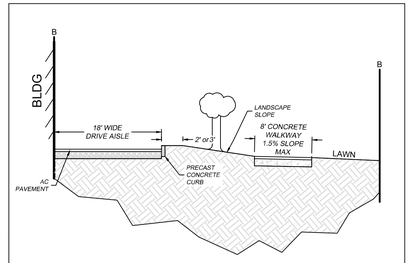

ALLEY CROSS SECTION B-B

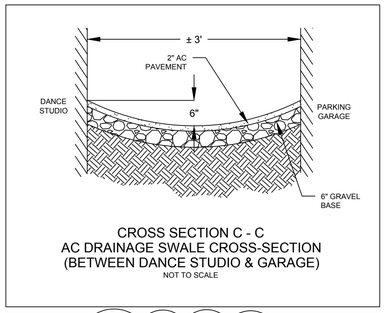

CROSS SECTION C - C
AC DRAINAGE SWALE CROSS-SECTION
(BETWEEN DANCE STUDIO & GARAGE)
NOT TO SCALE

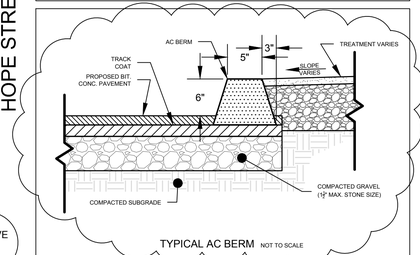

TYPICAL AC BERM NOT TO SCALE

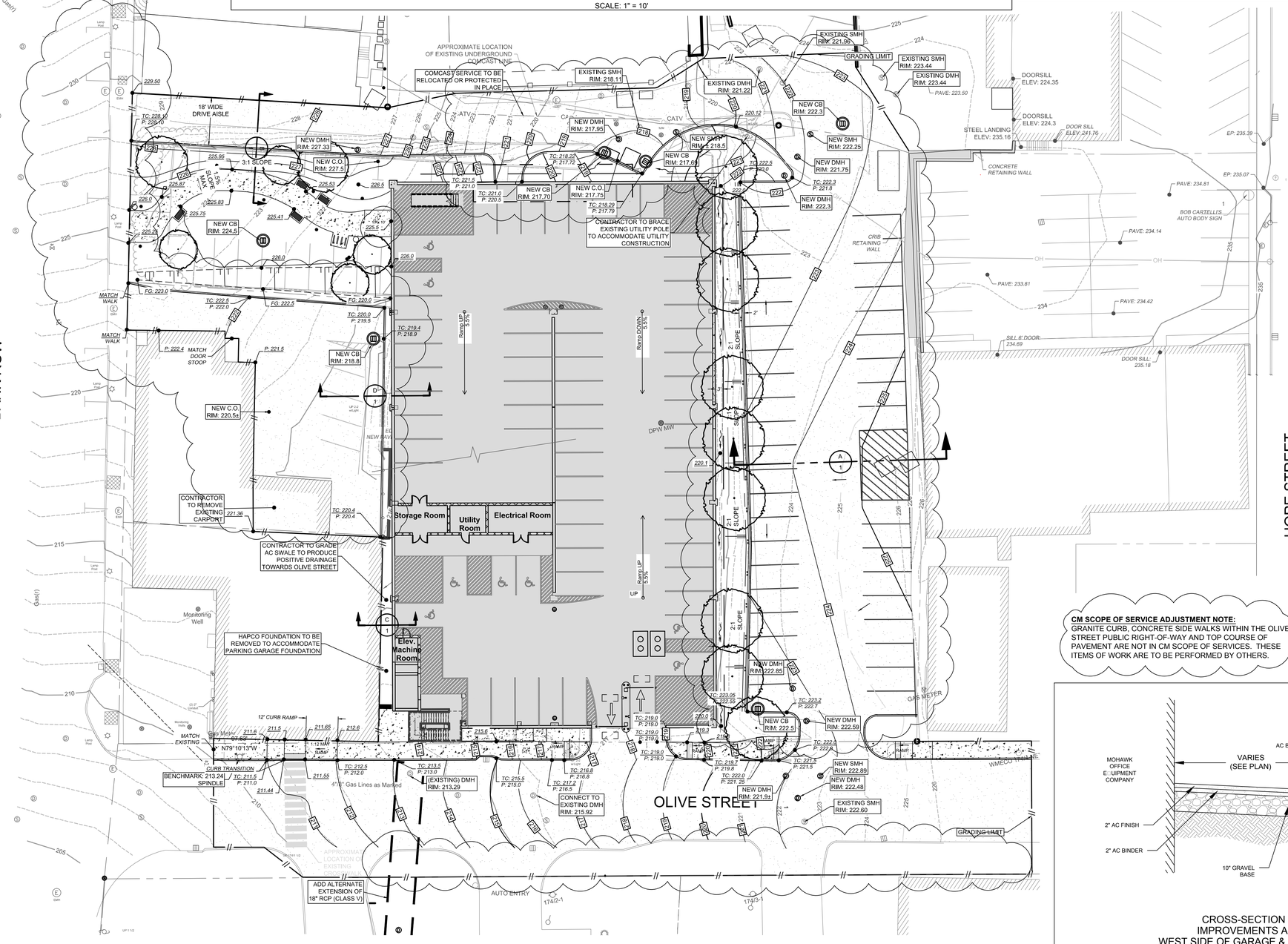

CM SCOPE OF SERVICE ADJUSTMENT NOTE:
GRANITE CURB, CONCRETE SIDE WALKS WITHIN THE OLIVE STREET PUBLIC RIGHT-OF-WAY AND TOP COURSE OF PAVEMENT ARE NOT IN CM SCOPE OF SERVICES. THESE ITEMS OF WORK ARE TO BE PERFORMED BY OTHERS.

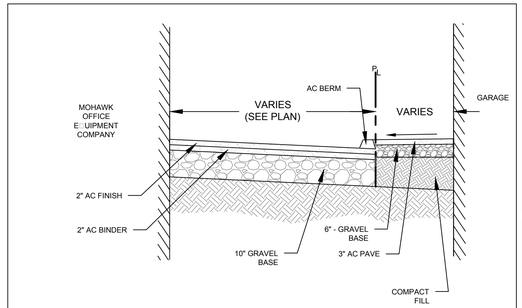

CROSS-SECTION D - D
IMPROVEMENTS ALONG
WEST SIDE OF GARAGE & PARKING LOT
NOT TO SCALE

COMMONWEALTH OF MASSACHUSETTS
ANTHONY WONSESKI JR.
CIVIL
No. 46615
REGISTERED PROFESSIONAL ENGINEER

ANTHONY WONSESKI, JR. DATE
R.C.E. NUMBER: 46615

0 10 20 40
GRAPHIC SCALE 1" = 20'

SVE PROJ. G1605

N
NORTH

DESMAN
Design Management
SVE
Engineering
Planning
Landscape Architecture
Surveying

SVE Associates
PO Box: 1818
439 West River Road
Brattleboro, VT 05302
T 802.257.0561
F 802.257.0721
www.sveassoc.com

Olive Street Parking Facility

Olive Street
Greenfield, MA

CONSTRUCTION DOCUMENTS - BID SET

ISSUE		
5	CD - BID SET	09/06/17
4	Permit Set	08/23/17
3	100% CD	7/10/17
2	ADDENDUM 1	6/2/17
1	PKG - 1	5/10/17
NO.	DESCRIPTION	DATE

Copyright © 2017 DESMAN, Inc. All rights reserved. No part of these documents may be reproduced in any form or by any means without written permission from DESMAN, Inc.

DRAWING TITLE:

GRADING PLAN

DRAWING NO:

C4

SCALE:	As indicated	
DATE:	09/06/2017	
PROJECT NO:	20-16105.01-1	
DES. AW	DRWN. MJS	CHK'D. AW

Drawing name: P:\Project G1605 Gfld Municipal Garage\Dwg Concepts G1605-100% CONSTRUCTION DWG REV 4 -8-23-17.dwg Sep 05, 2017 - 11:19am

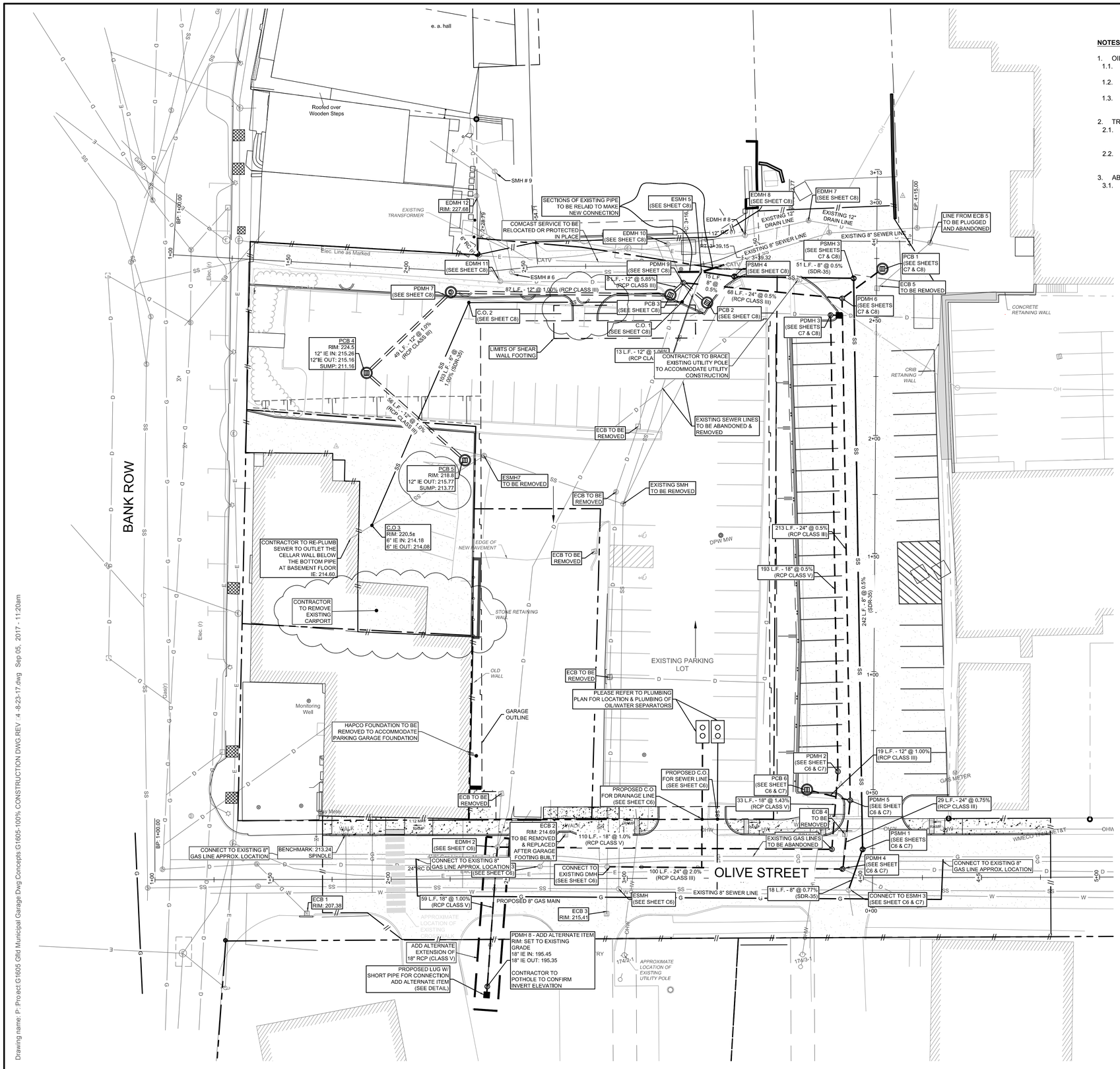

NOTES:

1. OIL/WATER SEPARATORS NOTE:
   - 1.1. OIL/WATER SEPARATORS TO BE LOCATED WITHIN PARKING GARAGE FOOTPRINT. FOR LOCATION PLEASE REFER TO GARAGE PLUMBING PLANS.
   - 1.2. STORMWATER CAPTURED ON THE UNCOVERED UPPER DECK WILL BE PLUMBED INTO A OIL/WATER SEPARATOR WHICH WILL FLOW INTO THE MUNICIPAL DRAINAGE SYSTEM.
   - 1.3. STORMWATER COLLECTED FROM THE COVERED DECKS WILL BE PLUMBED INTO A OIL/WATER SEPARATOR WHICH WILL FLOW INTO THE MUNICIPAL SEWER SYSTEM.
2. TRAFFIC CONTROL NOTE:
   - 2.1. CONTRACTOR SHALL COORDINATE TRAFFIC CONTROL MEASURES WITH THE TOWN OF GREENFIELD TO ALLOW CONTINUOUS ACCESS TO THE TRANSPORTATION CENTER DURING CONSTRUCTION.
   - 2.2. CONTRACTOR SHALL COORDINATE PARKING WITH TOWN OF GREENFIELD THROUGHOUT CONSTRUCTION SCHEDULE.
3. ABANDONED UTILITIES:
   - 3.1. ALL ABANDONED SEWER MANHOLES, CATCH BASINS, DRAINAGE MANHOLES, SEWER PIPES & DRAINAGE PIPES TO BE REMOVED IN THE FOOT PRINT OF THE PROPOSED GARAGE STRUCTURE AND WITHIN THE INFLUENCED AREA OF THE GARAGE FOOTING.

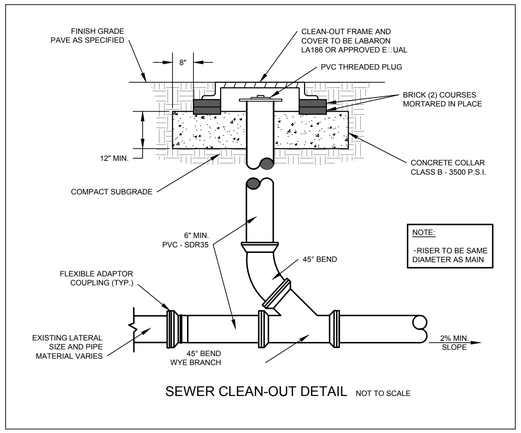

SEWER CLEAN-OUT DETAIL NOT TO SCALE

DESMAN Design Management

SVE
Engineering
Planning
Landscape Architecture
Surveying

SVE Associates
PO Box 1818
439 West River Road
Brattleboro, VT 05302
T 802.257.0561
F 802.257.0721
www.sveassoc.com

Olive Street Parking Facility

Olive Street
Greenfield, MA

CONSTRUCTION DOCUMENTS - BID SET

ISSUE

NO.	DESCRIPTION	DATE
5	CD - BID SET	09/06/17
4	Permit Set	08/23/17
3	100% CD	7/10/17
2	ADDENDUM 1	6/2/17
1	PKG - 1	5/10/17

Copyright © 2017 DESMAN, Inc. All rights reserved. No part of these documents may be reproduced in any form or by any means without written permission from DESMAN, Inc.

COMMONWEALTH OF MASSACHUSETTS ANTHONY WONSESKI JR. CIVIL No. 46615 REGISTERED PROFESSIONAL ENGINEER

ANTHONY WONSESKI, JR. DATE
R.C.E. NUMBER: 46615

DRAWING TITLE:

UTILITY PLAN

0 10 20 40
GRAPHIC SCALE 1" = 20'

SVE PROJ. G1605

N NORTH

DRAWING NO:

C5

SCALE:	As indicated
DATE:	09/06/2017
PROJECT NO:	20-16105.01-1

DES.	DRWN.	CHK'D.
AW	MJS	AW

Drawing name: P: Project G1605 Gfld Municipal Garage Dwg Concepts G1605-100% CONSTRUCTION DWG.REV 4 -8-23-17.dwg Sep 05, 2017 - 11:20am

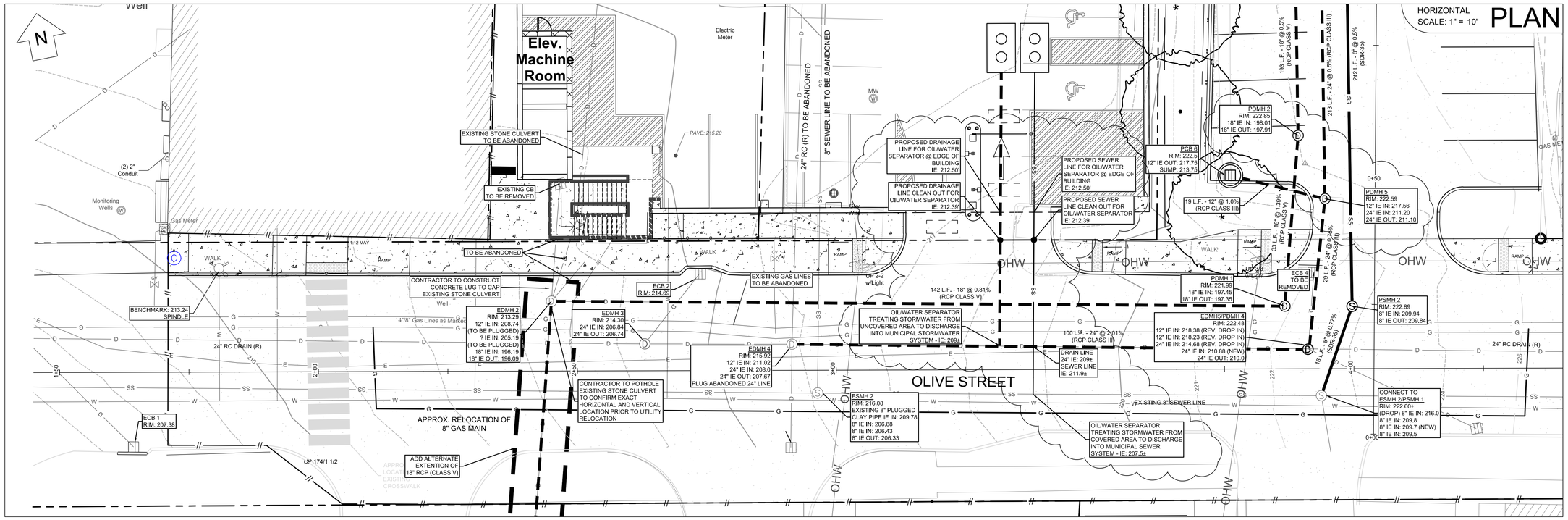

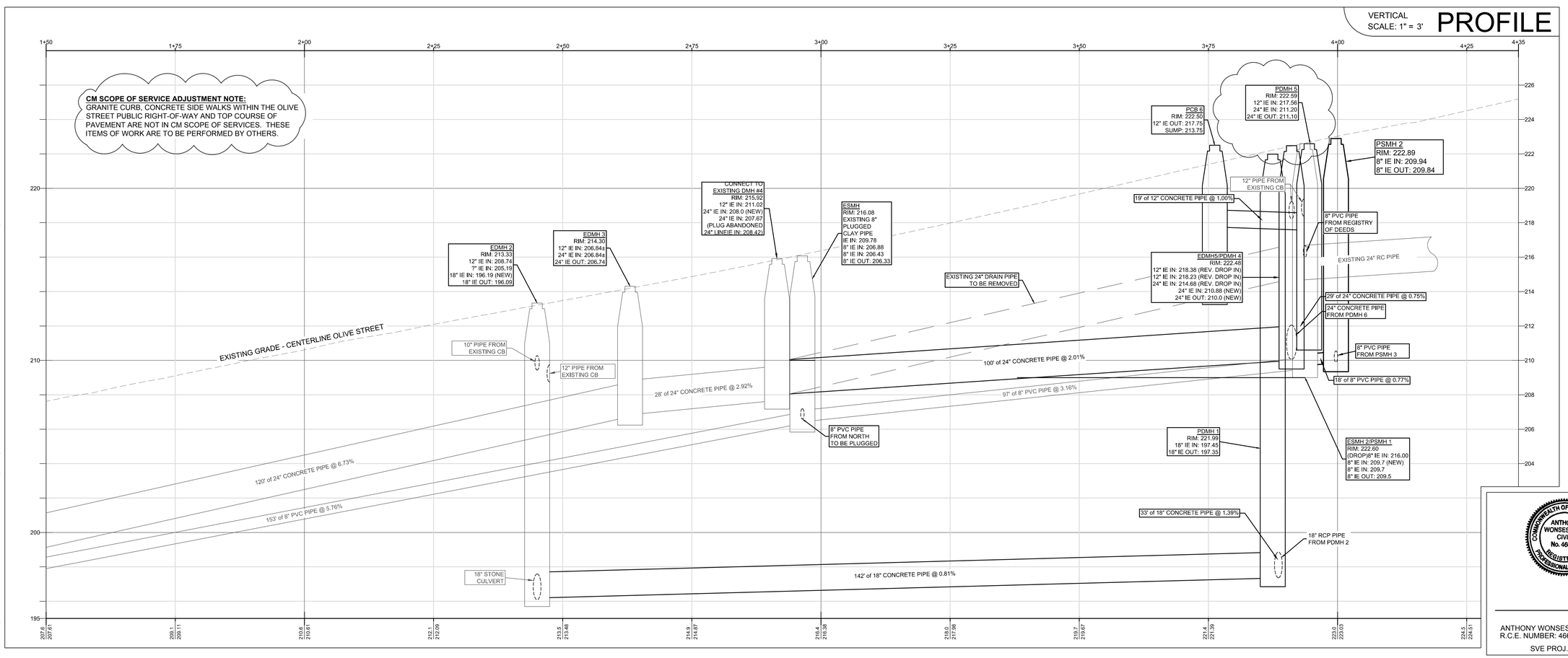

Drawing name: P:\Project\G1605 Olfd Municipal Garage\Dwg\Concepts\G1605-100% CONSTRUCTION DWG.REV 4-8-23-17.dwg Sep 05, 2017 - 11:20am

DESMAN Design Management

SVE
Engineering
Planning
Landscape Architecture
Surveying

SVE Associates
PO Box: 1818
439 West River Road
Brattleboro, VT 05302
T 802.257.0561
F 802.257.0721
www.sveassoc.com

Olive Street Parking Facility

Olive Street
Greenfield, MA

CONSTRUCTION DOCUMENTS - BID SET

ISSUE

NO.	DESCRIPTION	DATE
5	CD - SET	09/06/17
4	Permit Set	08/23/17
3	100% CD	7/10/17
2	ADDENDUM 1	6/2/17
1	PKG - 1	5/10/17

Copyright © 2017 DESMAN, Inc. All rights reserved. No part of these documents may be reproduced in any form or by any means without written permission from DESMAN, Inc.

DRAWING TITLE:

IMPROVEMENT PLAN OLIVE ST

DRAWING NO:

C6

SCALE: As indicated

DATE: 09/06/2017

PROJECT NO: 20-16105.01-1

DES.	DRWN.	CHK'D.
AW	MJS	AW

COMMONWEALTH OF MASSACHUSETTS
ANTHONY WONSESKI JR.
CIVIL
No. 46615
REGISTERED PROFESSIONAL ENGINEER

ANTHONY WONSESKI, JR. DATE
R.C.E. NUMBER: 46615

SVE PROJ. #: G1605

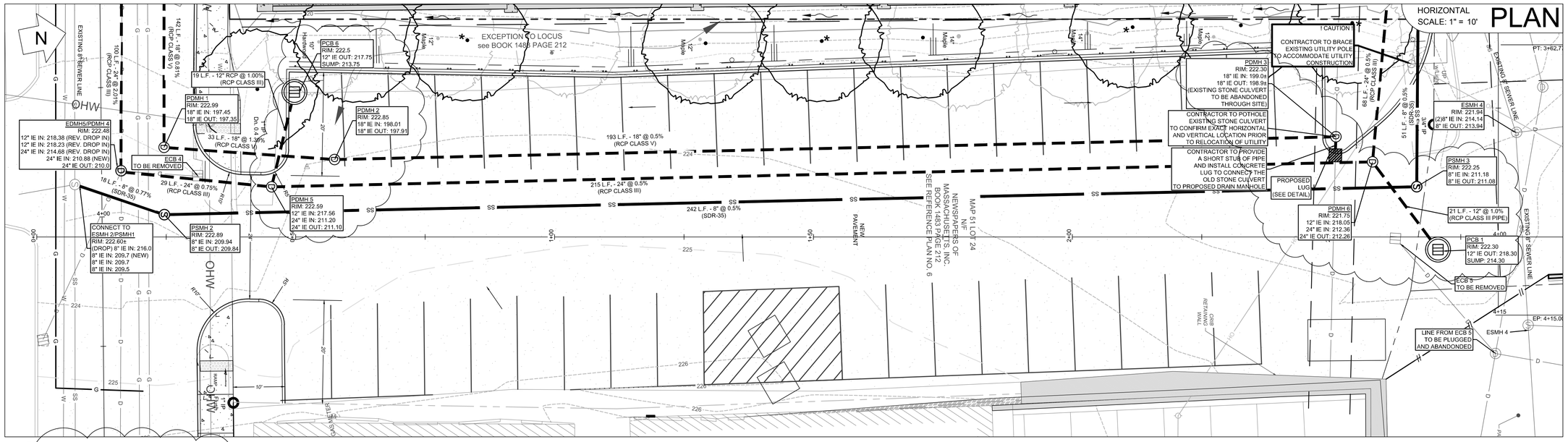

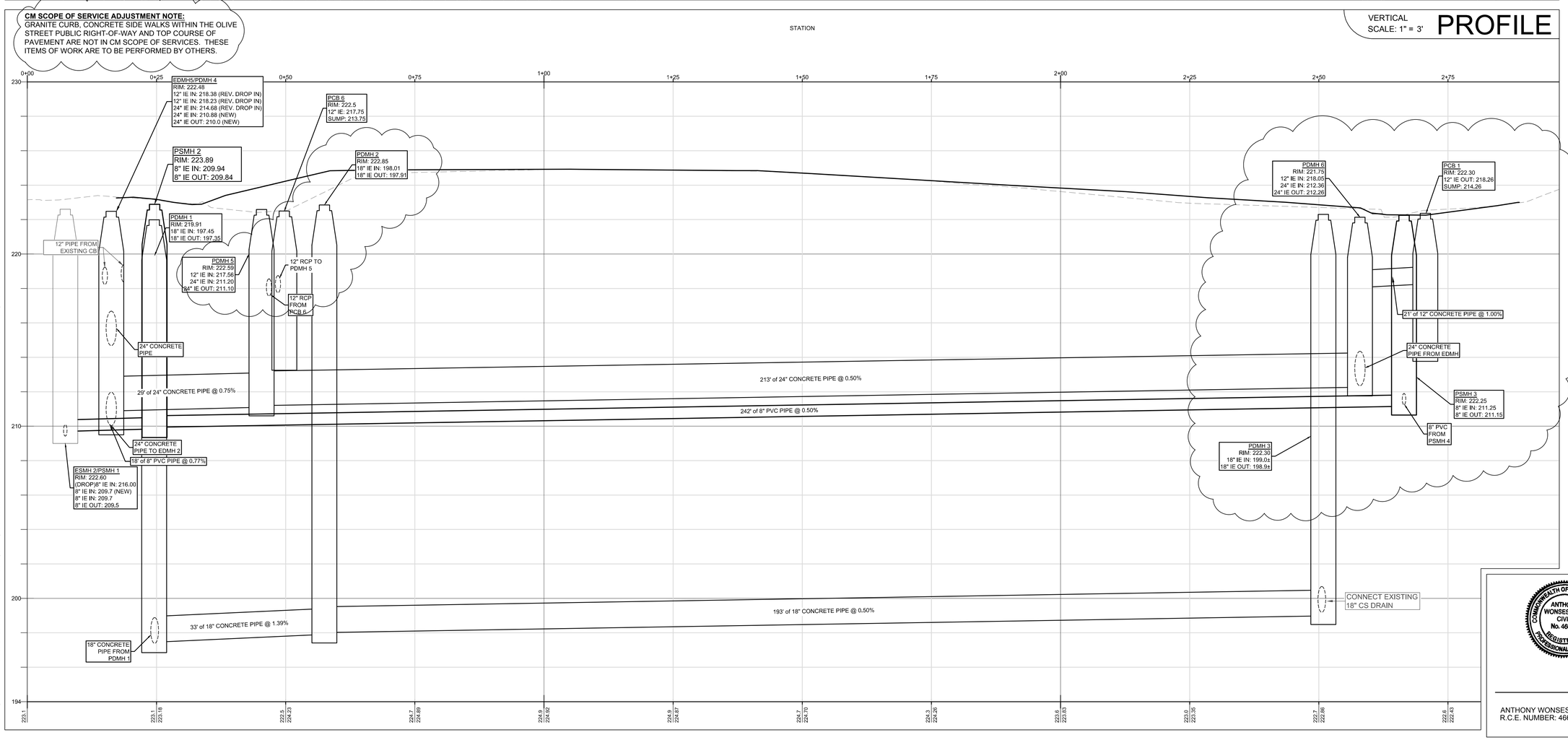

COMMONWEALTH OF MASSACHUSETTS ANTHONY WONSESKI JR. CIVIL No. 46615 REGISTERED PROFESSIONAL ENGINEER

ANTHONY WONSESKI, JR. DATE
R.C.E. NUMBER: 46615

DESMAN Design Management
SVE
Engineering
Planning
Landscape Architecture
Surveying

SVE Associates
PO Box: 1818
439 West River Road
Brattleboro, VT 05302
T 802.257.0561
F 802.257.0721
www.sveassoc.com

Olive Street Parking Facility

Olive Street
Greenfield, MA

CONSTRUCTION DOCUMENTS - BID SET

ISSUE

NO	DESCRIPTION	DATE
5	CD - BID SET	09/06/17
4	Permit Set	08/23/17
3	100% CD	7/10/17
2	ADDENDUM 1	6/2/17
1	PKG - 1	5/10/17

Copyright © 2017 DESMAN, Inc. All rights reserved. No part of these documents may be reproduced in any form or by any means without written permission from DESMAN, Inc.

DRAWING TITLE:
IMPROVEMENT PLAN PROPOSED DRIVE

DRAWING NO:
C7

SCALE: As indicated
DATE: 09/06/2017
PROJECT NO: 20-16105.01-1

DES.	DRWN.	CHK'D.
AW	MJS	AW

Drawing name: P:\Project G1605 GMd Municipal Garage\Dwg Concepts G1605-100% CONSTRUCTION DWG.REV 4-8-23-17.dwg Sep 05, 2017 - 11:20am

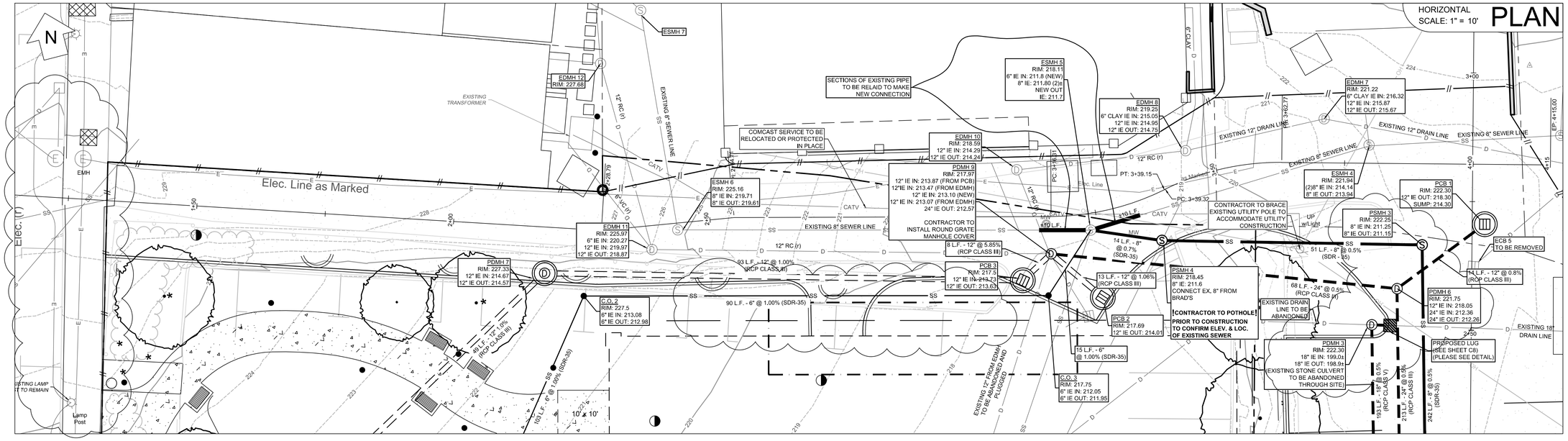

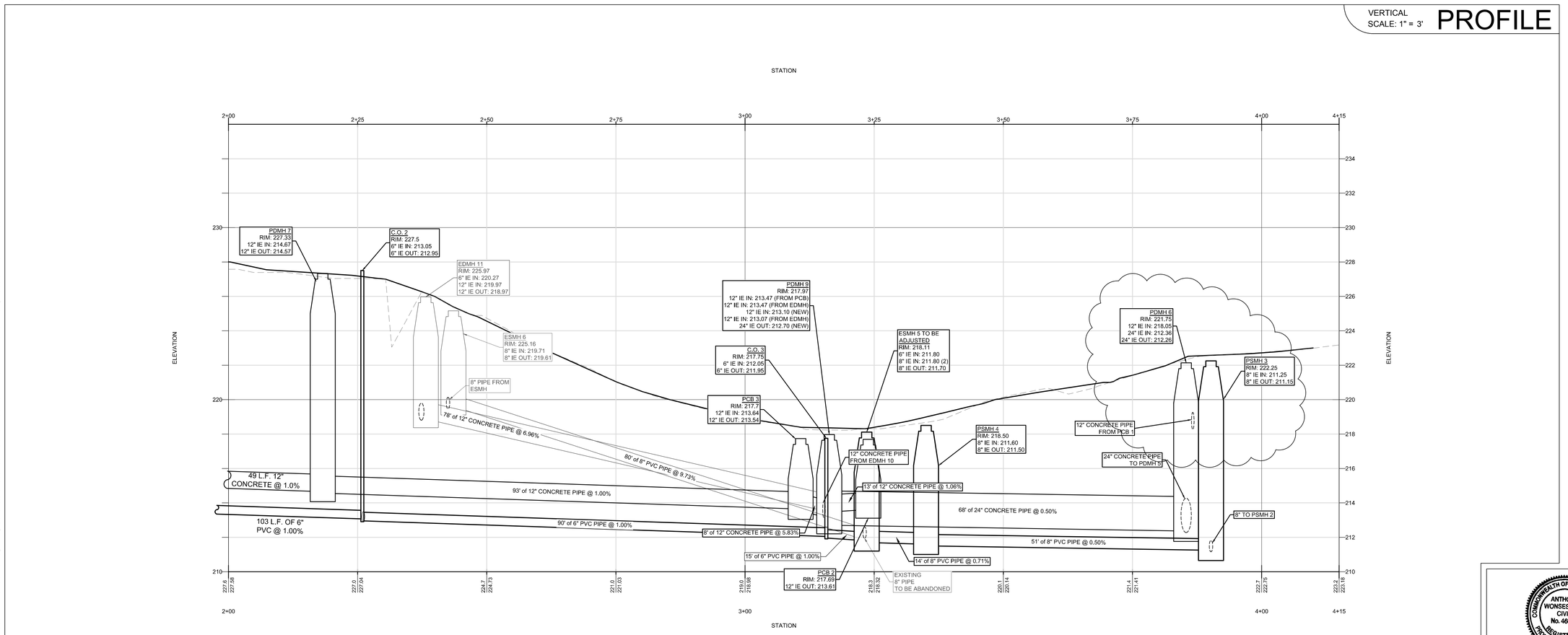

Drawing name: P:\Projects\G1605 Gifd Municipal Garage Dwg Concepts\G1605-100% CONSTRUCTION DWG.REV 4-8-23-17.dwg Sep 05, 2017 - 11:20am

DESMAN
Design Management
SVE
Engineering
Planning
Landscape Architecture
Surveying

SVE Associates
PO Box 1818
439 West River Road
Brattleboro, VT 05302
T 802.257.0561
F 802.257.0721
www.sveassoc.com

Olive Street Parking Facility

Olive Street
Greenfield, MA

CONSTRUCTION DOCUMENTS - BID SET

ISSUE

NO.	DESCRIPTION	DATE
5	CD - BID SET	09/06/17
4	Permit Set	08/23/17
3	100% CD	7/10/17
2	ADDENDUM 1	6/2/17
1	PKG - 1	5/10/17

Copyright © 2017 DESMAN, Inc. All rights reserved. No part of these documents may be reproduced in any form or by any means without written permission from DESMAN, Inc.

DRAWING TITLE:

IMPROVEMENT PLAN ALLEY

DRAWING NO:

C8

SCALE: As indicated

DATE: 09/06/2017

PROJECT NO: 20-16105.01-1

DES.	DRWN.	CHK'D.
AW	MJS	AW

COMMONWEALTH OF MASSACHUSETTS
ANTHONY WONSESKI JR.
CIVIL
No. 46615
REGISTERED PROFESSIONAL ENGINEER

ANTHONY WONSESKI, JR. DATE
R.C.E. NUMBER: 46615

SVE PROJ. #: G1605

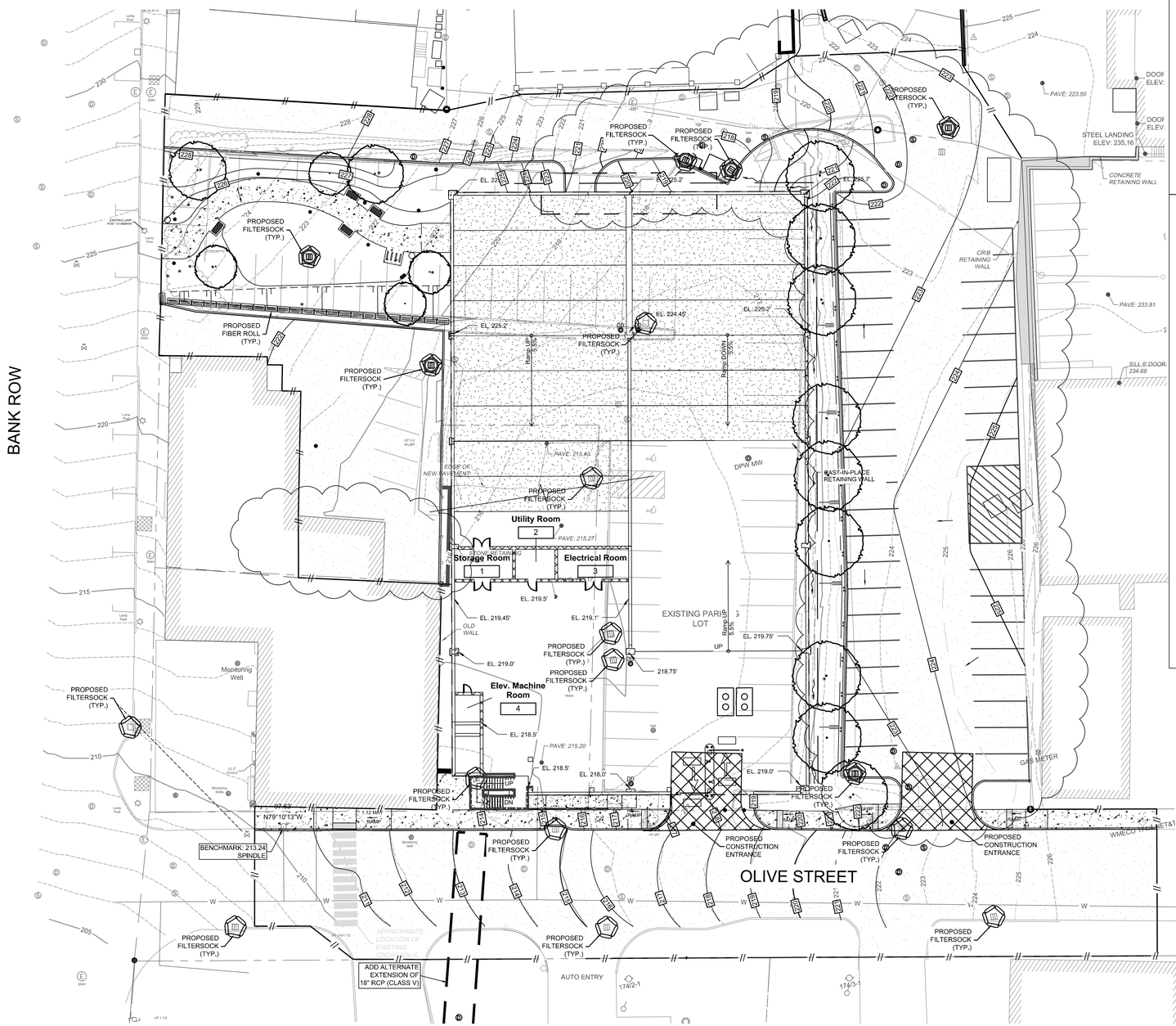

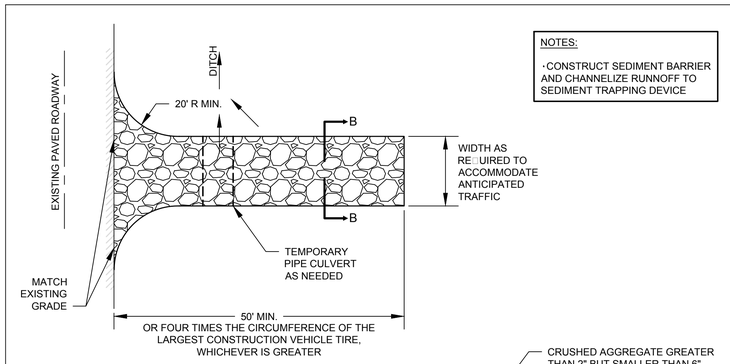

NOTES:

- CONSTRUCT SEDIMENT BARRIER AND CHANNELIZE RUNNOFF TO SEDIMENT TRAPPING DEVICE

PLAN

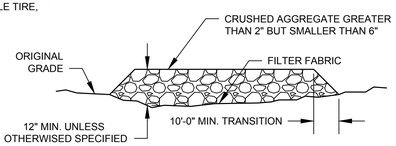

SECTION B - B

STABILIZED CONSTRUCTION ENTRANCE NOT TO SCALE

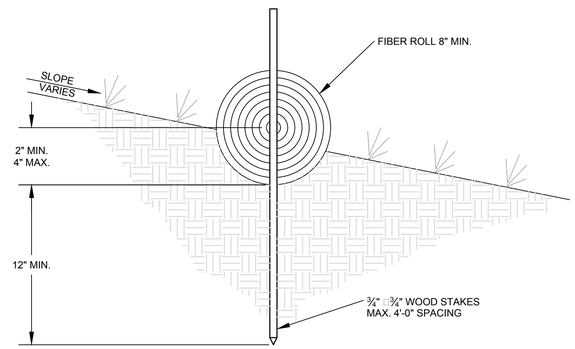

FIBER ROLL ENTRENCHMENT DETAIL NOT TO SCALE

NOTE:

SILT SACS SHALL BE IN USED FOR THE CATCH BASINS IN THE LOWER PARKING LOT FOR THE DURATION OF THE WORK ASSOCIATED WITH THE UTILITY RELOCATION PORTION OF THE PROJECT.

COMMONWEALTH OF MASSACHUSETTS
ANTHONY WONSESKI JR.
CIVIL
No. 46615
REGISTERED PROFESSIONAL ENGINEER

ANTHONY WONSESKI, JR. DATE
R.C.E. NUMBER: 46615

0 10 20 40
GRAPHIC SCALE 1" = 20'

SVE PROJ. #
G1605

N
NORTH

DESMAN
Design Management

SVE
Engineering
Planning
Landscape Architecture
Surveying

SVE Associates
PO Box 1818
439 West River Road
Brattleboro, VT 05302
T 802.257.0561
F 802.257.0721
www.sveassoc.com

Olive Street Parking Facility

Olive Street
Greenfield, MA

PERMIT SET

ISSUE

NO.	DESCRIPTION	DATE
4	Permit Set	08/23/17
3	100% CD	7/10/17
2	ADDENDUM 1	6/2/17
1	PKG - 1	5/10/17

Copyright © 2017 DESMAN, Inc. All rights reserved. No part of these documents may be reproduced in any form or by any means without written permission from DESMAN, Inc.

DRAWING TITLE:
EROSION CONTROL

DRAWING NO:
C9

SCALE: As indicated
DATE: 08/01/2017
PROJECT NO: 20-16105.01-1

DES.	DRWN.	CHK'D.
AW	MJS	AW

Drawing name: P:\Project G1605 Gfld Municipal Garage\Dwg Concepts G1605-100% CONSTRUCTION DWG.REV 4 8-23-17.dwg Sep 05, 2017 - 11:20am

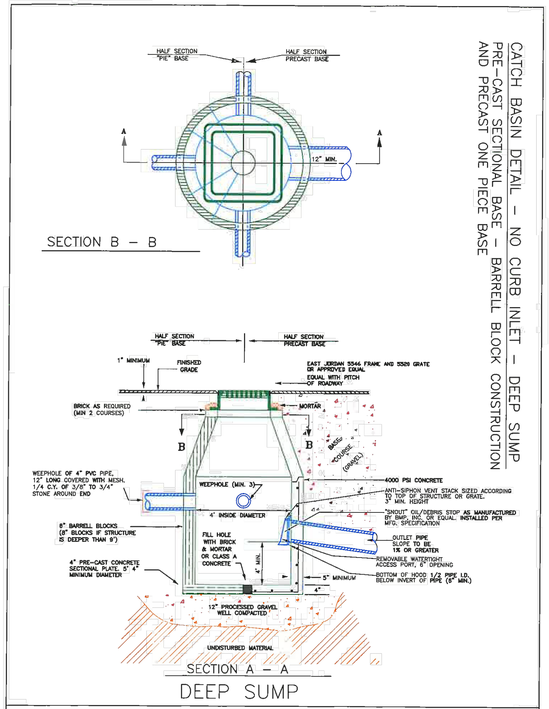

CATCH BASIN DETAIL – NO CURB INLET – DEEP SUMP
PRE-CAST SECTIONAL BASE – BARRELL BLOCK CONSTRUCTION
AND PRECAST ONE PIECE BASE

Greenfield Department of Public Works | July 1997 By: S.J. Roberts CBDET.dwg | Rev. 11/13 Rev. 8/99 Rev. 3/07

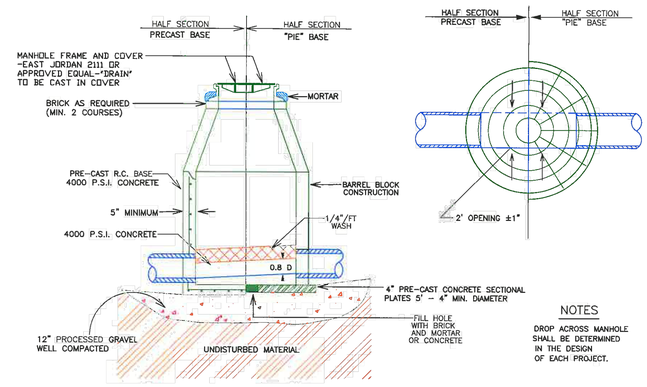

NOTES

DROP ACROSS MANHOLE SHALL BE DETERMINED IN THE DESIGN OF EACH PROJECT.

DRAIN MANHOLE DETAILS

PRE-CAST BASE AND SECTIONAL PLATE BASE

Greenfield Department of Public Works | Rev. 11/13 1997 By: S.J.R. DMH-Detail.dwg

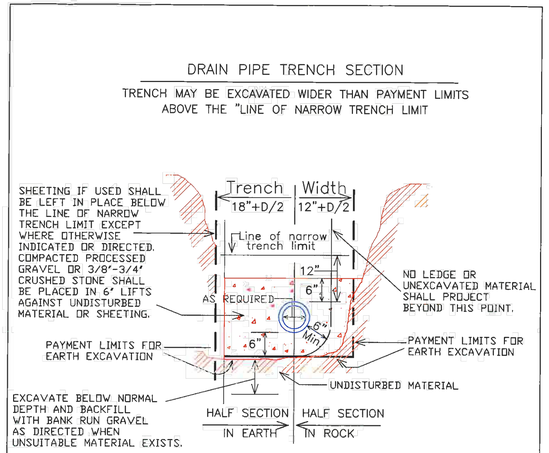

1. Pipe shall be 12" minimum. Concrete class III, SDR 35 PVC or other material as approved by the Greenfield Department of Public Works. All joints to be rubber gasket "O" ring types.
2. Pipe shall be to proper line and grade with a minimum of three (3) feet of cover. Minimum grade shall be 0.5 ft/100 ft unless otherwise approved by the Town Engineer.
3. All pipe not laid by the Greenfield Department of Public Works shall be inspected by the Engineering Division of said D.P.W. prior to burial.

Greenfield Department of Public Works | July 1997 By: S.J. Roberts DTRSEC.dwg

COMMONWEALTH OF MASSACHUSETTS
ANTHONY WONSESKI JR.
CIVIL
No. 46615
REGISTERED PROFESSIONAL ENGINEER

ANTHONY WONSESKI, JR. DATE
R.C.E. NUMBER: 46615

SVE PROJ. :: G1605

DESMAN Design Management
SVE
Engineering
Planning
Landscape Architecture
Surveying

SVE Associates
PO Box 1818
439 West River Road
Brattleboro, VT 05302
T 802.257.0561
F 802.257.0721
www.sveassoc.com

Olive Street Parking Facility

Olive Street
Greenfield, MA

PERMIT SET

ISSUE

NO.	DESCRIPTION	DATE
4	Permit Set	08/23/17
3	100% CD	7/10/17
2	ADDENDUM 1	6/2/17
1	PKG - 1	5/10/17

Copyright © 2017 DESMAN, Inc. All rights reserved. No part of these documents may be reproduced in any form or by any means without written permission from DESMAN, Inc.

DRAWING TITLE:

DETAIL SHEET

DRAWING NO:

C10

SCALE: As indicated
DATE: 08/01/2017
PROJECT NO: 20-16105.01-1

DES.	DRWN.	CHK'D.
AW	MJS	AW

0MA211000018

26 X 6 FRAME & DRAIN COVER

2111 Cover

00211125
QTY: 1

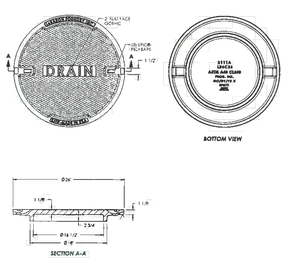

2266 Frame

00226611
QTY: 1

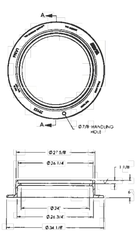

Call Today for More Information
800.626.4653

Corporate Headquarters
301 Spring Street
PO Box 439
East Jordan, MI
49727-0439
EJ GROUP

- Weights (lbs./kg.), dimensions (inches/mm) and drawings provided for your guidance
- We reserve the right to modify specifications without prior notice
- Uncontrolled distribution

CONFIDENTIAL: This drawing is the property of East Jordan Iron Works, Inc. and embodies confidential information, registered marks, trade secret information and/or know how that is the property of East Jordan Iron Works, Inc. ©Copyright 2012 East Jordan Iron Works, Inc.

EJIW EAST JORDAN IRON WORKS EST.1883
WE COVER YOUR INFRASTRUCTURE
www.ejiw.com MADE IN THE USA

0MA211000024

26 X 8 FRAME & SEWER COVER

2111 Frame

00211111
QTY: 1

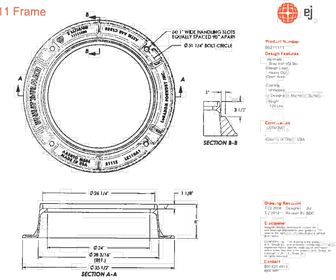

2111 Cover

00211123
QTY: 1

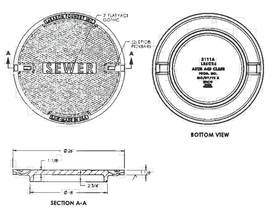

Call Today for More Information
800.626.4653

Corporate Headquarters
301 Spring Street
PO Box 439
East Jordan, MI
49727-0439
EJ GROUP

- Weights (lbs./kg.), dimensions (inches/mm) and drawings provided for your guidance
- We reserve the right to modify specifications without prior notice
- Uncontrolled distribution

CONFIDENTIAL: This drawing is the property of East Jordan Iron Works, Inc. and embodies confidential information, registered marks, trade secret information and/or know how that is the property of East Jordan Iron Works, Inc. ©Copyright 2012 East Jordan Iron Works, Inc.

EJIW EAST JORDAN IRON WORKS EST.1883
WE COVER YOUR INFRASTRUCTURE
www.ejiw.com MADE IN THE USA

0MA552000027

24X24X6 FR HD SQ HOLE GRATE 6" 4FLG

5520 Grate

00552060
QTY: 1

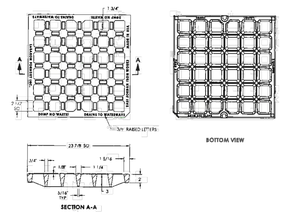

5546 Frame

00554611
QTY: 1

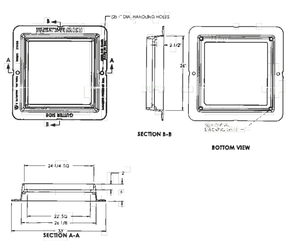

Call Today for More Information
800.626.4653

Corporate Headquarters
301 Spring Street
PO Box 439
East Jordan, MI
49727-0439
EJ GROUP

- Weights (lbs./kg.), dimensions (inches/mm) and drawings provided for your guidance
- We reserve the right to modify specifications without prior notice
- Uncontrolled distribution

CONFIDENTIAL: This drawing is the property of East Jordan Iron Works, Inc. and embodies confidential information, registered marks, trade secret information and/or know how that is the property of East Jordan Iron Works, Inc. ©Copyright 2012 East Jordan Iron Works, Inc.

EJIW EAST JORDAN IRON WORKS EST.1883
WE COVER YOUR INFRASTRUCTURE
www.ejiw.com MADE IN THE USA

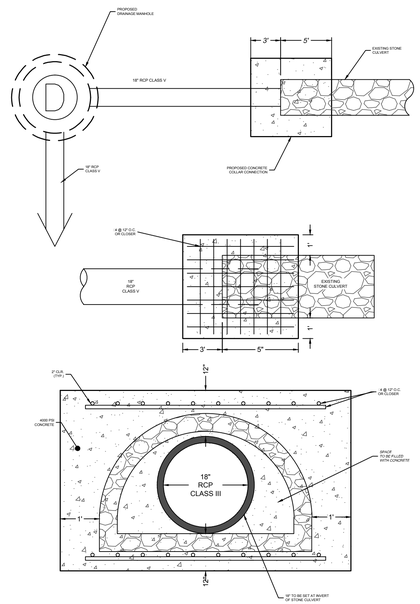

DETAIL
CONCRETE COLLAR CONNECTION
18" RCP (CLASS V) TO EXISTING STONE CULVERT

Drawing name: P:\Project G1605 Gfld Municipal Garage\Dwg Concepts G1605-100% CONSTRUCTION DWG.REV 4-8-23-17.dwg Sep 05, 2017 - 11:20am

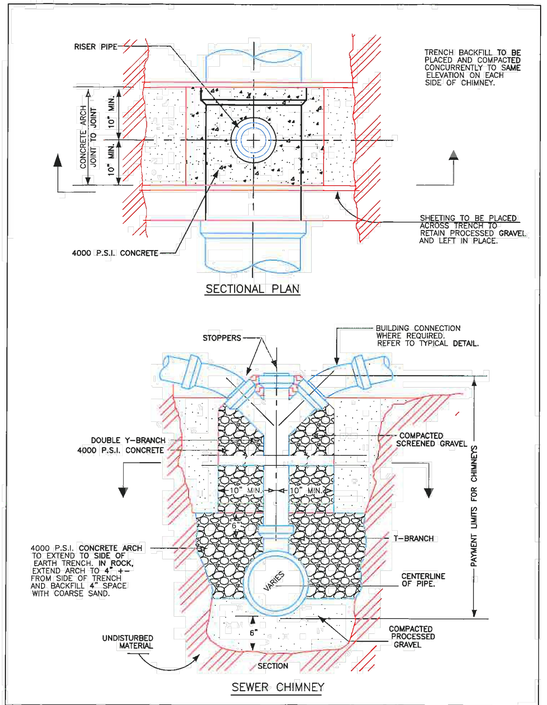

Greenfield Department of Public Works — July 1997 By: S.J. Roberts SEWCHIM.dwg

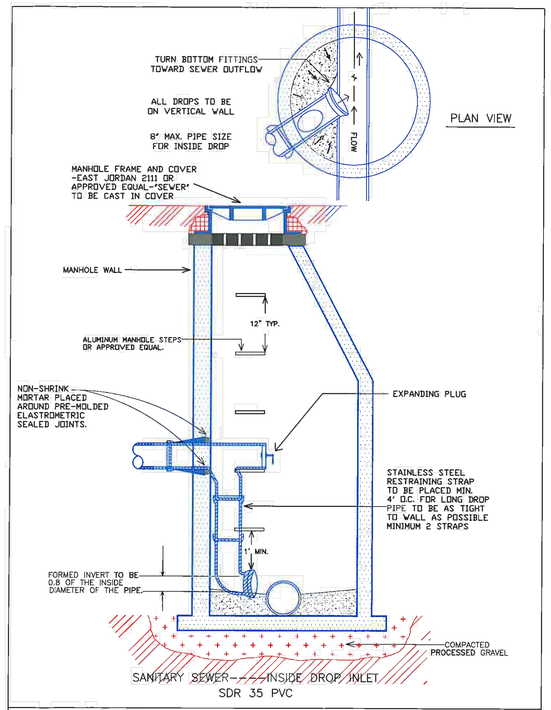

Greenfield Department of Public Works — REV 11/13 — June 2008 By: S.J. Roberts SEWINDI.dwg

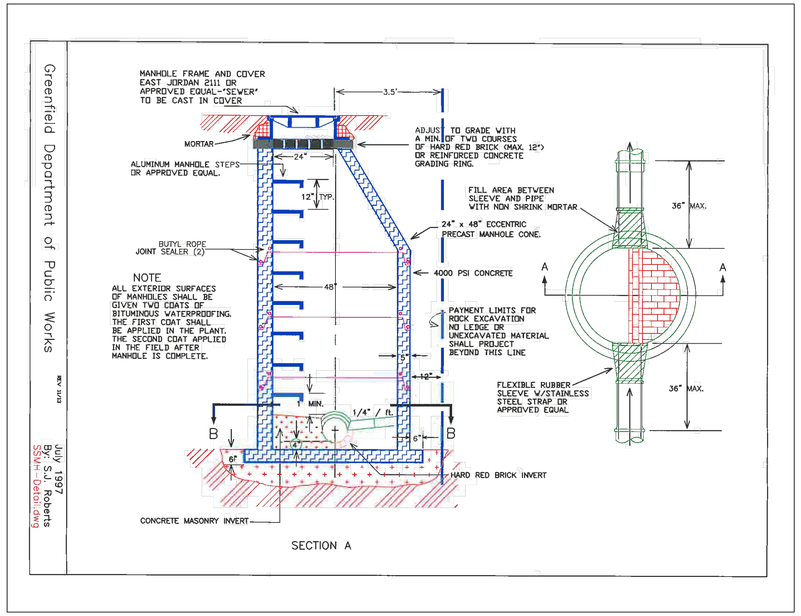

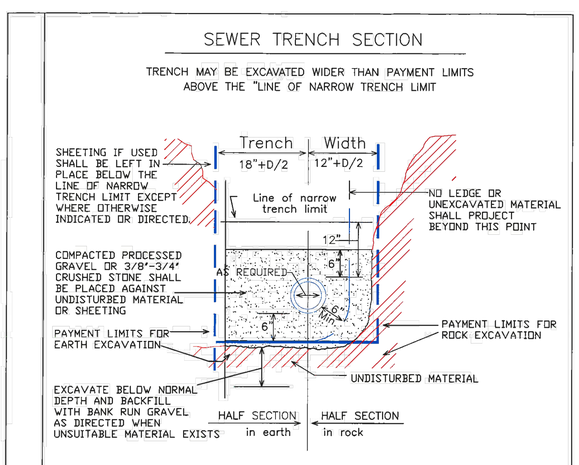

1. PIPE SHALL BE 4' MIN. FOR SERVICE LINE AND 8' MIN FOR TRUNK LINES. POLYVINYL CHLORIDE (P.V.C.) SEWER PIPE CONFORMING TO A.S.T.M. DESIGNATION D 3034-73 SDR 35 IN NOT LESS THAN TWELVE (12) FOOT LENGTHS; -or- OTHER MATERIAL AS APPROVED BY THE GREENFIELD DEPARTMENT OF PUBLIC WORKS. ALL JOINTS TO BE RUBBER GASKET TYPE.
2. PIPE SHALL BE TO PROPER LINE AND GRADE WITH A MINIMUM OF THREE (3) FEET OF COVER. MINIMUM GRADE SHALL BE 0.5 FT./100 FT. UNLESS OTHERWISE APPROVED BY THE TOWN ENGINEER.
3. ALL PIPE NOT LAID BY THE GREENFIELD DEPARTMENT OF PUBLIC WORKS SHALL BE INSPECTED BY THE ENGINEERING DIVISION OF SAID DPW PRIOR TO BURIAL.
4. ALL TAPS, CONNECTIONS, OR REPAIRS TO ANY SEWERS SHALL BE MADE USING APPROVED TAPPING SADDLES AND/OR COMPRESSION COUPLINGS CONFORMING TO A.S.T.M. DESIGNATION C594.

Greenfield Department of Public Works — July 1997 By: S.J. Roberts SSTRSEC.dwg

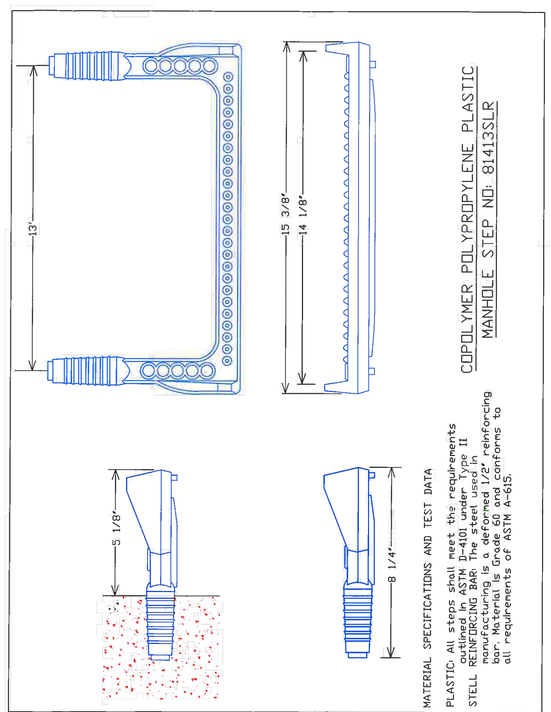

Greenfield Department of Public Works — July 1997 By: S.J. Roberts SMH-Step.dwg

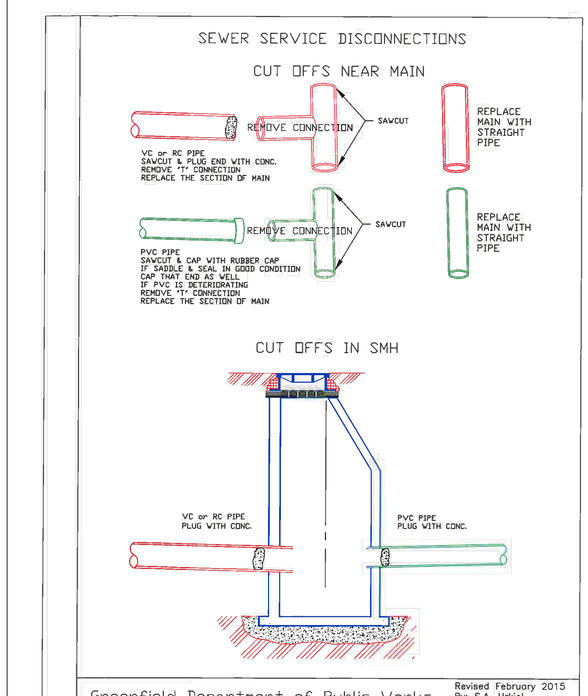

Greenfield Department of Public Works — Revised February 2015 By: S.A. Urkiel SS - D/SCONNECTION.dwg

DESMAN Design Management
SVE
Engineering
Planning
Landscape Architecture
Surveying

SVE Associates
PO Box 1818
439 West River Road
Brattleboro, VT 05302
T 802.257.0561
F 802.257.0721
www.sveassoc.com

Olive Street Parking Facility

Olive Street
Greenfield, MA

CONSTRUCTION DOCUMENTS - BID SET

ISSUE

NO.	DESCRIPTION	DATE
5	CD - BID SET	09/06/17
4	Permit Set	08/23/17
3	100% CD	7/10/17
2	ADDENDUM 1	6/2/17
1	PKG - 1	5/10/17

Copyright © 2017 DESMAN, Inc. All rights reserved. No part of these documents may be reproduced in any form or by any means without written permission from DESMAN, Inc.

DRAWING TITLE:

DETAIL SHEET

DRAWING NO:

C11

SCALE: As indicated

DATE: 09/06/2017

PROJECT NO: 20-16105.01-1

DES.	DRWN.	CHK'D.
AW	MJS	AW

COMMONWEALTH OF MASSACHUSETTS — ANTHONY WONSESKI JR. — CIVIL — No. 46615 — REGISTERED PROFESSIONAL ENGINEER

ANTHONY WONSESKI, JR. DATE
R.C.E. NUMBER: 46615

SVE PROJ. :: G1605

Drawing name: P: Project G1605 Gfld Municipal Garage Dwg Concepts G1605-100% CONSTRUCTION DWG.REV 4-8-23-17.dwg Sep 05, 2017 - 11:20am

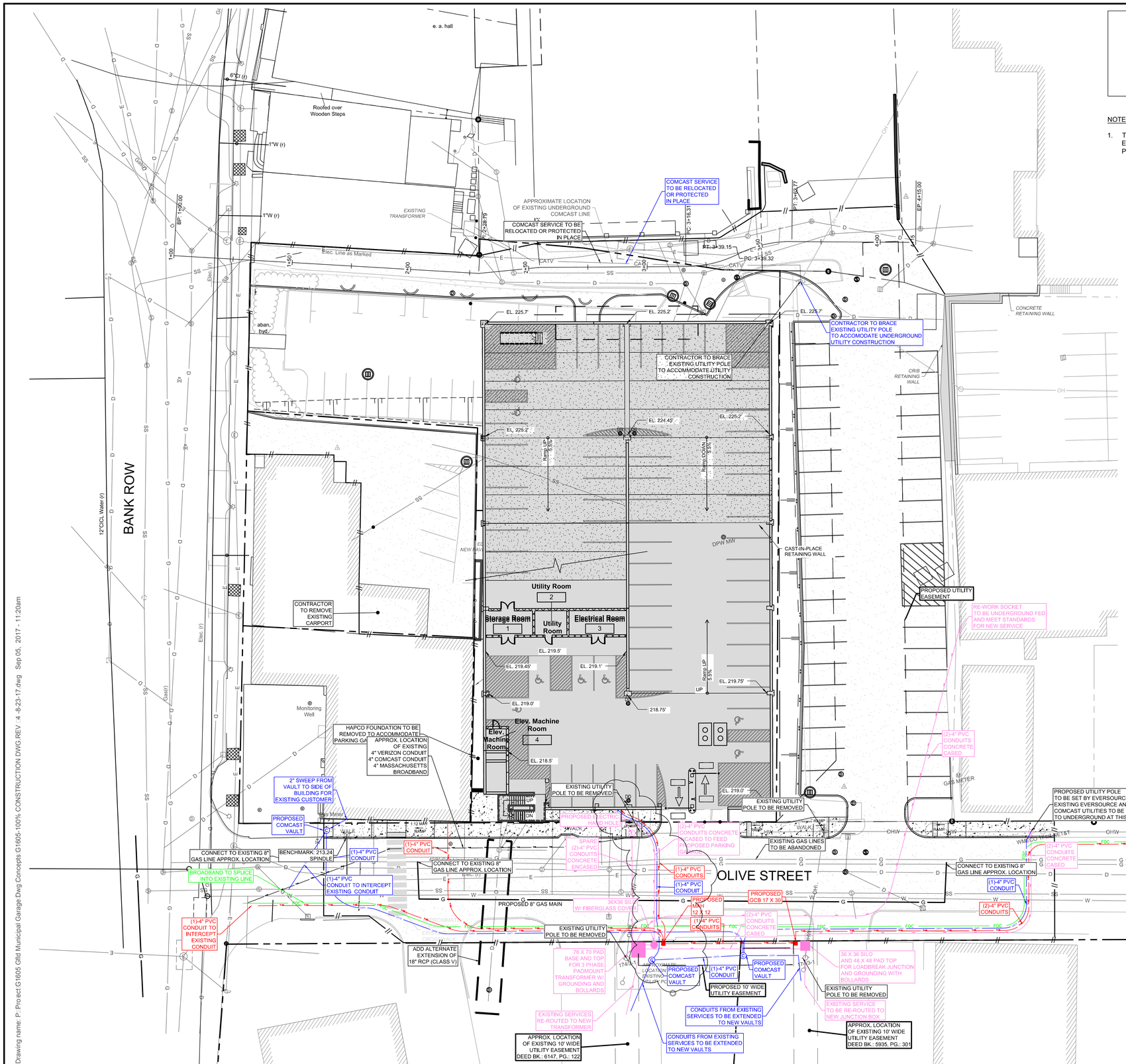

DRY UTILITY LEGEND

- EVERSOURCE ELECTRIC
- CATV — COMCAST CABLE
- VERIZON
- FIBER — MASSACHUSETTS BROADBAND INSTITUTE

NOTES:

1. THE LOCATION OF DRY UTILITIES SHOWN ON THIS PLAN ARE APPROXIMATE. EXACT ROUTING OF THE DRY UTILITIES WILL BE DETERMINED BY EACH SERVICE PROVIDER.

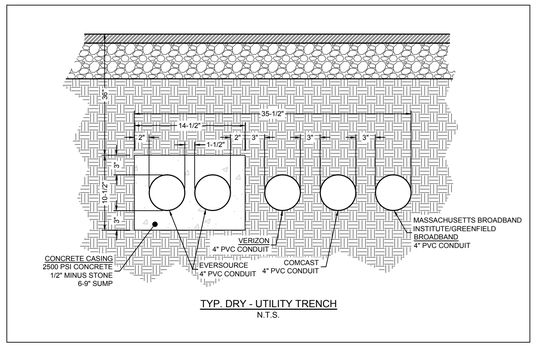

TYP. DRY - UTILITY TRENCH
N.T.S.

DESMAN Design Management

SVE
Engineering
Planning
Landscape Architecture
Surveying

SVE Associates
PO Box: 1818
439 West River Road
Brattleboro, VT 05302
T 802.257.0561
F 802.257.0721
www.sveassoc.com

Olive Street Parking Facility

Olive Street
Greenfield, MA

CONSTRUCTION DOCUMENTS - BID SET

ISSUE

NO.	DESCRIPTION	DATE
5	CD - BID SET	09/06/17
4	Permit Set	08/23/17

Copyright © 2017 DESMAN, Inc. All rights reserved. No part of these documents may be reproduced in any form or by any means without written permission from DESMAN, Inc.

DRAWING TITLE:

DRY UTILITY PLAN

COMMONWEALTH OF MASSACHUSETTS
ANTHONY WONSESKI JR.
CIVIL
No. 46615
REGISTERED PROFESSIONAL ENGINEER

ANTHONY WONSESKI, JR. DATE
R.C.E. NUMBER: 46615

0 10 20 40
GRAPHIC SCALE 1" = 20'

SVE PROJ. #: G1605

N
NORTH

DRAWING NO:

C-12

SCALE: As indicated
DATE: 09/06/2017
PROJECT NO: 20-16105.01-1

DES.	DRWN.	CHK'D.
AW	MJS	AW

Drawing name: P:\Project G1605 Gfld Municipal Garage Dwg Concepts G1605-100% CONSTRUCTION DWG.REV 4 8-23-17.dwg Sep 05, 2017 - 11:20am

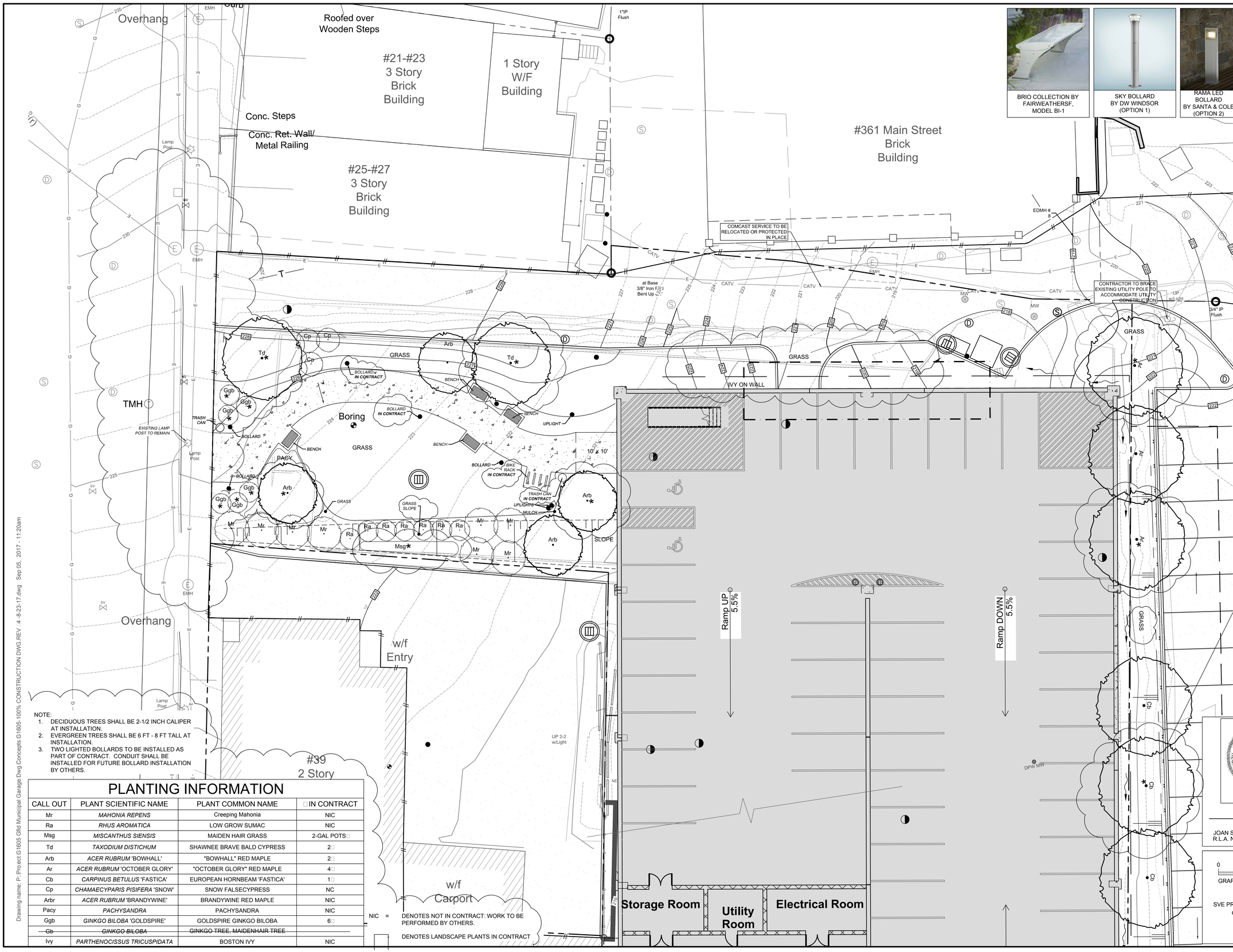

BRIO COLLECTION BY FAIRWEATHERSF, MODEL BI-1

SKY BOLLARD BY DW WINDSOR (OPTION 1)

RAMA LED BOLLARD BY SANTA & COLE (OPTION 2)

BRIO COLLECTION BY FAIRWEATHERSF, MODEL TR-26 (40 GALLON)

NOTE:
1. DECIDUOUS TREES SHALL BE 2-1/2 INCH CALIPER AT INSTALLATION.
2. EVERGREEN TREES SHALL BE 6 FT - 8 FT TALL AT INSTALLATION.
3. TWO LIGHTED BOLLARDS TO BE INSTALLED AS PART OF CONTRACT. CONDUIT SHALL BE INSTALLED FOR FUTURE BOLLARD INSTALLATION BY OTHERS.

PLANTING INFORMATION

CALL OUT	PLANT SCIENTIFIC NAME	PLANT COMMON NAME	□ IN CONTRACT
Mr	*MAHONIA REPENS*	Creeping Mahonia	NIC
Ra	*RHUS AROMATICA*	LOW GROW SUMAC	NIC
Msg	*MISCANTHUS SIENSIS*	MAIDEN HAIR GRASS	2-GAL POTS□
Td	*TAXODIUM DISTICHUM*	SHAWNEE BRAVE BALD CYPRESS	2□
Arb	*ACER RUBRUM* 'BOWHALL'	"BOWHALL" RED MAPLE	2□
Ar	*ACER RUBRUM* 'OCTOBER GLORY'	"OCTOBER GLORY" RED MAPLE	4□
Cb	*CARPINUS BETULUS* 'FASTICA'	EUROPEAN HORNBEAM 'FASTICA'	1□
Cp	*CHAMAECYPARIS PISIFERA* 'SNOW'	SNOW FALSECYPRESS	NC
Arbr	*ACER RUBRUM* 'BRANDYWINE'	BRANDYWINE RED MAPLE	NIC
Pacy	*PACHYSANDRA*	PACHYSANDRA	NIC
Ggb	*GINKGO BILOBA* 'GOLDSPIRE'	GOLDSPIRE GINKGO BILOBA	6□
~~Gb~~	~~*GINKGO BILOBA*~~	~~GINKGO TREE, MAIDENHAIR TREE~~	
Ivy	*PARTHENOCISSUS TRICUSPIDATA*	BOSTON IVY	NIC

NIC = DENOTES NOT IN CONTRACT. WORK TO BE PERFORMED BY OTHERS.

□ DENOTES LANDSCAPE PLANTS IN CONTRACT

Drawing name: P:\Project\G1605 Gfld Municipal Garage\Dwg\Concepts\G1605-100% CONSTRUCTION DWG.REV 4 -8-23-17.dwg Sep 05, 2017 - 11:20am

DESMAN Design Management

SVE
Engineering
Planning
Landscape Architecture
Surveying

SVE Associates
PO Box: 1818
439 West River Road
Brattleboro, VT 05302
T 802.257.0561
F 802.257.0721
www.sveassoc.com

Olive Street Parking Facility

Olive Street
Greenfield, MA

CONSTRUCTION DOCUMENTS - BID SET

LANDSCAPE ARCHITECT
Joan S. Rockwell & Associates
16 Call Rd
Colrain, MA 01340
(413) 624 9666 PHONE
joansrockwell@gmail.com

MASSACHUSETTS JOAN S. ROCKWELL No. 1006 REGISTERED LANDSCAPE ARCHITECT

JOAN S. ROCKWELL DATE
R.L.A. NUMBER: 1006

0 5 10 20
GRAPHIC SCALE 1" = 10'

SVE PROJ. □: G1605

N NORTH

ISSUE

NO.	DESCRIPTION	DATE
5	CD - BID SET	09/06/17
4	Permit Set	08/23/17
2	100% CD	7/10/17
1	PKG - 1	5/10/17

Copyright © 2017 DESMAN, Inc. All rights reserved. No part of these documents may be reproduced in any form or by any means without written permission from DESMAN, Inc.

DRAWING TITLE:
LANDSCAPE PLAN SHEET 1

DRAWING NO:
L1

SCALE: As indicated
DATE: 09/06/2017
PROJECT NO: 20-16105.01-1

DES.	DRWN.	CHK'D.
JS	MJS	JS

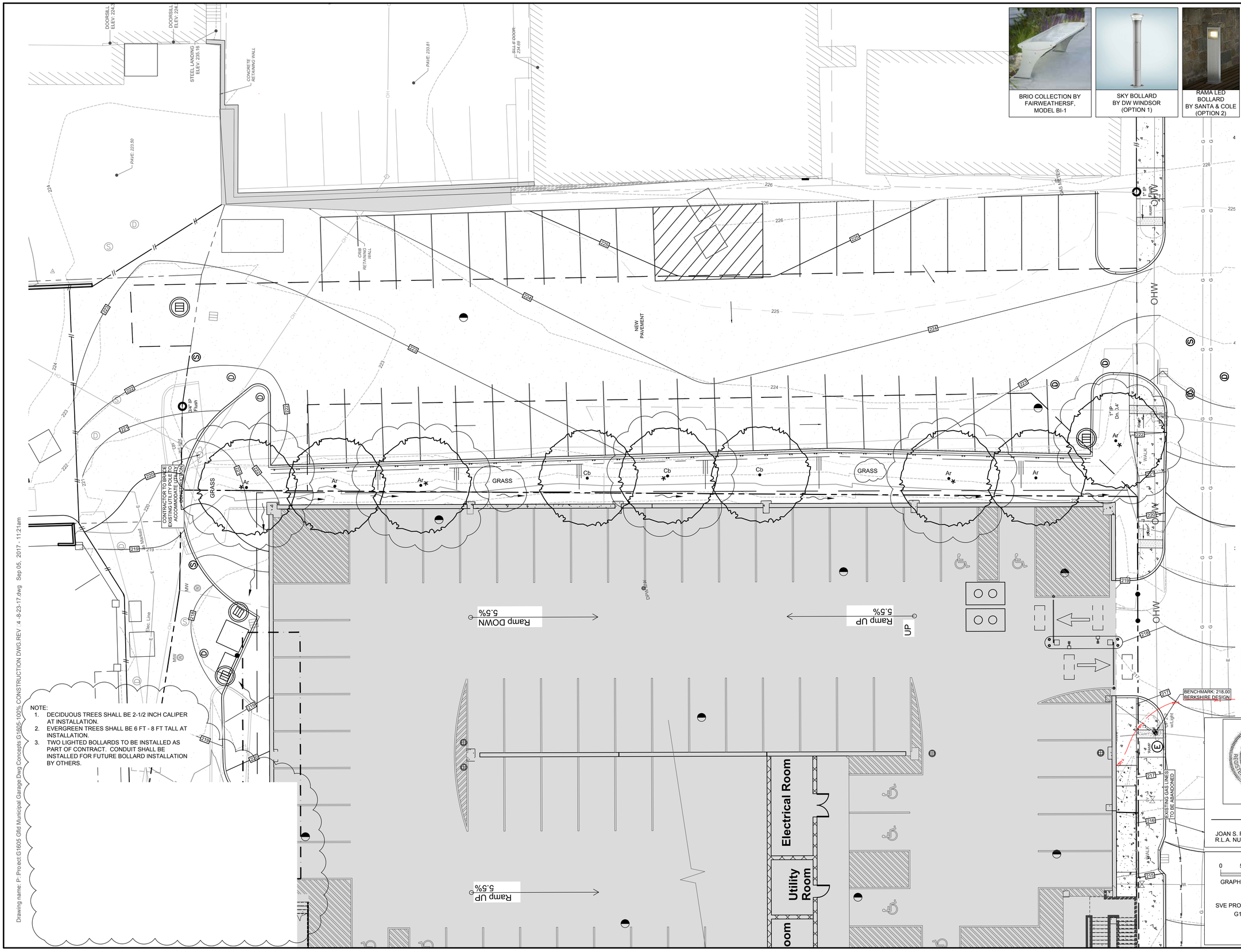

BRIO COLLECTION BY FAIRWEATHERSF, MODEL BI-1

SKY BOLLARD BY DW WINDSOR (OPTION 1)

RAMA LED BOLLARD BY SANTA & COLE (OPTION 2)

BRIO COLLECTION BY FAIRWEATHERSF, MODEL TR-26 (40 GALLON)

NOTE:
1. DECIDUOUS TREES SHALL BE 2-1/2 INCH CALIPER AT INSTALLATION.
2. EVERGREEN TREES SHALL BE 6 FT - 8 FT TALL AT INSTALLATION.
3. TWO LIGHTED BOLLARDS TO BE INSTALLED AS PART OF CONTRACT. CONDUIT SHALL BE INSTALLED FOR FUTURE BOLLARD INSTALLATION BY OTHERS.

DESMAN
Design Management

SVE
Engineering
Planning
Landscape Architecture
Surveying

SVE Associates
PO Bo: 1818
439 West River Road
Brattleboro, VT 05302
T 802.257.0561
F 802.257.0721
www.sveassoc.com

Olive Street Parking Facility

Olive Street
Greenfield, MA

CONSTRUCTION DOCUMENTS - BID SET

LANDSCAPE ARCHITECT
Joan S. Rockwell & Associates
16 Call Rd
Colrain, MA 01340
(413) 624 9666 PHONE
joansrockwell@gmail.com

MASSACHUSETTS JOAN S. ROCKWELL No. 1006 REGISTERED LANDSCAPE ARCHITECT

JOAN S. ROCKWELL DATE
R.L.A. NUMBER: 1006

0 5 10 20
GRAPHIC SCALE 1" = 10'

SVE PROJ. G1605

N
NORTH

ISSUE

NO.	DESCRIPTION	DATE
5	CD - BID SET	09/06/17
4	Permit Set	08/23/17
2	100% CD	7/10/17
1	PKG - 1	5/10/17

Copyright © 2017 DESMAN, Inc. All rights reserved. No part of these documents may be reproduced in any form or by any means without written permission from DESMAN, Inc.

DRAWING TITLE:
LANDSCAPE PLAN SHEET 2

DRAWING NO:
L2

SCALE: As indicated
DATE: 09/06/2017
PROJECT NO: 20-16105.01-1

DES.	DRWN.	CHK'D.
JS	MJS	JS

THE FOLLOWING IS A PARTIAL SUMMARY OF SIGNIFICANT PREVISIONS OF APPLICABLE CODES AND REFERENCE STANDARDS. THIS IS NOT INTENDED TO BE A COMPREHENSIVE OR ALL-INCLUSIVE SUMMARY NOR IT IS INTENDED TO REPLACE, SUPERCEDE, LIMIT OR AMEND IN ANY WAY THE LISTED CODES AND STANDARDS AS APPLICABLE TO THIS PROJECT. ALL CODE SECTION REFERENCE ARE BASED ON MASSACHUSETTS 780 CMR, UNLESS NOTED OTHERWISE.

PARTIAL LISTING OF APPLICABLE CODES AND REFERENCE STANDARDS:

BUILDING_____780 CMR: MASSACHUSETTS STATE BUILDING CODE, EIGHTH ED. (MSBC 2009)
BASED ON 2009 IBC WITH AMENDMENTS

FIRE PREVENTION_____527 CMR: MASSACHUSETTS FIRE PREVENTION REGULATIONS

ACCESSIBILITY_____521 CMR: MASSACHUSETTS ARCHITECTURAL ACCESS BOARD REGULATIONS

ELECTRICAL_____ 527 CMR 12, NFPA 70 MASSACHUSETTS STATE ELECTRICAL CODE
NATIONAL ELECTRICAL CODE (NEC 2005)

ELEVATORS_____524 CMR: MASSACHUSETTS STATE ELEVATOR CODE

MECHANICAL_____2009 INTERNATIONAL MECHANICAL CODE (IMC 2009)

PLUMBING_____248 CMR: MASSACHUSETTS PLUMBING CODE

ENERGY CONSERVATION ___2009 INTERNATIONAL ENERGY CONSERVATION CODE (IECC 2009)

CHAPTER 3: USE AND OCCUPANCY CLASSIFICATION:
USE GROUP S-2 (LOW HAZARD) PARKING GARAGE, OPEN OR ENCLOSED (780 CMR 311.3)

CHAPTER 4: SPECIAL DETAILED REQUIREMENTS BASED ON USE AND OCCUPANCY:
406.2: PARKING GARAGES
406.2.2.1 CLEAR HEIGHT: THE CLEAR HEIGHT OF EACH FLOOR LEVEL IN VEHICLE AND PEDESTRIAN TRAFFIC AREAS SHALL NOT BE LESS THAN 7 FEET. VEHICLE AND PEDESTRIAN AREAS ACCOMMODATING VAN-ACCESIBLE PARKING REQUIRED BY SECTION 1106.5 SHALL CONFORM TO 521 CMR 23.00: PARKING AND PASSENGER LOADING ZONES.
406.2.3 GUARDS: GUARDS SHALL BE PROVIDED IN ACCORDANCE WITH SECTION 1013. GUARDS SERVING AS VEHICLE BARRIER SYSTEMS SHALL COMPLY WITH 406.2 AND 1013.
406.3 OPEN PARKING GARAGE
406.3.3.1 OPENINGS: FOR NATURAL VENTILATION PURPOSES, THE EXTERIOR SIDE OF THE STRUCTURE SHALL HAVE UNIFORMLY DISTRIBUTED OPENINGS ON TWO OR MORE SIDES. THE AREA OF SUCH OPENINGS IN EXTERIOR WALLS ON A TIER MUST BE AT LEAST 25 PERCENT OF THE TOTAL PERIMETER WALL AREA FOR EACH TIER. THE AGGREGATE LENGTH OF SUCH OPENINGS SHALL CONSTITUTE A MINIMUM OF 40 PERCENT OF THE PERIMETER OF THE TIER. INTERIOR WALLS SHALL BE AT LEAST 25 PERCENT OPEN WITH UNIFORMLY DISTRIBUTED OPENINGS.
406.3.5.1 SINGLE USE: WHEN THE OPEN PARKING GARAGE IS USED EXCLUSIVELY FOR PARKING OF MOTOR VEHICLES... THE AREA AND HEIGHT SHALL BE PERMITTED TO COMPLY WITH TABLE 406.3.6...

OPEN PARKING GARAGE AREA AND HEIGHT

TYPE OF CONSTRUCTION	AREA PER TIER	RAMP ACCESS
IIB	50,000 SF	8 TIERS

MGL CH148 SEC. 26G: SPRINKLER SYSTEMS ARE NOT REQUIRED IN OPEN-AIR PARKING STRUCTURES DEFINED AS: BUILDING, STRUCTURES OR PORTIONS THEREOF USED FOR PARKING MOTOR VEHICLES AND HAVING NOT LESS THAN 25 PERCENT OF TOTAL WALL AREA OPEN TO ATMOSPHERE AT EACH LEVEL, UTILIZING AT LEAST TWO SIDES OF THE STRUCTURE.

406.3.5 OPEN PARKING GARAGE AREA AND HEIGHT: (TABLE 406.3.5)
TYPE IIB CONSTRUCTION = 50,000 S.F. AREA PER TIER & 8 TIERS IN HEIGHT
PROVIDED AREA: 25,110 SF (MAXIMUM)
PROVIDED HEIGHT: 5 TIER

406.3.12 VENTILATION: VENTILATION, OTHER THAN THE PERCENTAGE OF OPENINGS SPECIFIED IN SECTION 406.3.3.1, SHALL NOT BE REQUIRED.

FIRE SEPARATION AND DISTANCE:
EXTERIOR WALLS AND OPENINGS IN EXTERIOR WALLS SHALL COMPLY WITH TABLES 601 & 602.
THE DISTANCE TO AN EXISTING LOT LINE SHALL BE DETERMINED IN ACCORDANCE WITH TABLE 602 & SECTION 705.

CHAPTER 5: GENERAL BUILDING HEIGHTS AND AREAS

508.2 ACCESSORY OCCUPANCIES. ACCESSORY OCCUPANCIES ARE THOSE THAT ARE ANCILLARY TO THE MAIN OCCUPANCY OF THE BUILDING OR PORTION THEREOF. ACCESSORY OCCUPANCIES SHALL COMPLY WITH THE PROVISIONS OF SECTION 508.2.1. THROUGH 508.2.5.3

508.2.1 AREA LIMITATIONS: AGGREGATE ACCESSORY OCCUPANCIES SHALL NOT OCCUPY MORE THAN 10 PERCENT OF THE BUILDING AREA OF THE STORY IN WHICH THEY ARE LOCATED AND SHALL NOT EXCEED THE TABULAR VALUES IN TABLE 506 FOR ACCESSORY OCCUPANCIES. (3,500 SF/42,858 SF=8.2 PERCENT)

508.2.4 NO SEPARATION IS REQUIRED BETWEEN THE ACCESSORY OCCUPANCIES AND THE MAIN OCCUPANCY.

CHAPTER 6: TYPES OF CONSTRUCTION

CONSTRUCTION CLASSIFICATION= IIB (SEE TABLE 406.3.5)

TABLE 601: FIRE RESISTANCE RATING REQUIREMENTS FOR BUILDING ELEMENTS

STRUCTURAL FRAME (INCLUDING COLUMNS, GIRDERS, TRUSSES) = 0 HOUR
BEARING WALLS (EXTERIOR & INTERIOR) = 0 HOURS
FLOOR CONSTRUCTION (INCLUDING SUPPORTING BEAMS AND JOISTS) = 0 HOUR
ROOF CONSTRUCTION (INCLUDING SUPPORTING BEAMS AND JOISTS) = 0 HOUR
ELEVATOR HOISTWAY = 2 HOUR (SEE SECTION 708.4)

NOTE: STAIRS IN GARAGE PERMITTED TO BE OPEN (SECTION 1022.1 EXCEPTION #4)

TABLE 602: FIRE RESISTANCE RATING REQUIREMENTS FOR EXTERIOR WALLS BASED ON SEPARATION DISTANCE

TWO HOUR FIRE WALL IS PROVIDED WHERE OPEN PARKING GARAGE IS LESS THAN 10 FEET FROM ADJACENT RESIDENTIAL BUILDING.

FOOTNOTE "D" - OPEN PARKING GARAGE COMPLYING WITH SECTION 406 SHALL NOT BE REQUIRED TO HAVE A FIRE-RESISTENCE RATING

FIRE RATED WALL IS PROVIDED ON THE WEST PORTION OF THE GARAGE WHERE THE FIRE SEPARATION IS LESS THAN 10 FEET FROM /2. ACCESSORY STORAGE/MECH. EXISTING ADJACENT BUILDING. NORTH, EAST AND SOUTH SIDES WHERE FIRE SEPARATION IS GREATER THAN 10 FEET FROM AN ADJACENT BUILDING, PROPERTY LINE OR PROPOSED EASEMENTS, FIRE RATED WALLS ARE NOT REQUIRED.

CHAPTER 7: FIRE RESISTANCE-RATED CONSTRUCTION:

TABLE 705.8: MAXIMUM AREA OF EXTERIOR WALL OPENINGS

FOOTNOTE "C" - OPENINGS IN FIRE WALLS FOR BUILDINGS ON THE SAME LOT SHALL CONFORM TO SECTION 706.8 AND SECTION 715.4 - OPENING SHALL NOT EXCEED 156 S.F. AND SHALL BE PROTECTED WITH FIRE DOOR ASSEMBLIES.
MAX DOOR OPENING PROVIDED - 30 S.F.

FOOTNOTE "G" - THE AREA OF OPENINGS IN AN OPEN PARKING STRUCTURE WITH A FIRE SEPARATION DISTANCE OF 10 FEET OR GREATER SHALL NOT BE LIMITED.

705.8.5: VERTICAL SEPARATION OF OPENINGS:
OPENINGS IN EXTERIOR WALLS IN ADJACENT STORIES SHALL BE SEPARATED VERTICALLY TO PROTECT AGAINST FIRE SPREAD ON THE EXTERIOR OF THE BUILDINGS...
EXCEPTION C: OPEN PARKING GARAGES

705.9: JOINTS:
JOINTS MADE IN OR BEWTEEN EXTERIOR WALLS REQUIRED BY THIS SECTION TO HAVE A FIRE-RESTIANCE RATING SHALL COMPLY WITH SECTION 714: FIRE-RESISTANT JOINT SYSTEMS.

708.14.1 ELEVATOR LOBBY:
EXCEPTION 7: ENCLOSED ELEVATOR LOBBIES ARE NOT REQUIRED WHERE THE ELEVATOR SERVES ONLY OPEN PARKING GARAGES IN ACCORDANCE WITH SECTION 406.3

CHAPTER 9: FIRE PROTECTION REQUIREMENTS:

GENERAL NOTE: ALL FIRE PROTECTION EQUIPMENT, PROPOSED LOCATIONS AND APPLICABILITY OF REFERENCED CODES ARE SUBJECT TO THE REVIEW OF THE FIRE OFFICIAL(S) HAVING JURISDICTION.

903.2.11.3 AUTOMATIC SPRINKLER SYSTEMS
BUILDINGS 55 FT OR MORE IN HEIGHT, AN AUTOMATIC SPRINKLER SYSTEM SHOULD BE INSTALLED THROUGHOUT BUILDINGS WITH FLOOR LEVEL HAVING AN OCCUPANT LOAD OF 30 OR MORE THAT IS LOCATED 55 FT OR MORE ABOVE THE LOWEST LEVEL OF FIRE DEPARTMENT ACCESS.
*EXCEPTION: OPEN PARKING GARAGES.

905 STANDPIPE SYSTEM:
CLASS 1 MANUAL STANDPIPES ARE ALLOWED IN OPEN PARKING GARAGES WHERE THE HIGHEST FLOOR IS LOCATED NOT MORE THAN 150 FT ABOVE THE LOWEST LEVEL OF FIRE DEPARTMENT ACCESS VEHICLE (780 CMR 905.3.1.2)
CLASS 1 MANUAL DRY STANDPIPES ARE ALLOWED IN OPEN PARKING GARAGES THAT ARE SUBJECT TO FREEZING TEMPERATURES PROVIDED THAT THE HOSE CONNECTIONS ARE LOCATED AS REQUIRED FOR CLASS II STANDPIPES IN ACCORDANCE WITH SECTION 905.5 (780 CMR 905 3.1.3)

906 PORTABLE FIRE EXTINGUISHERS (PFE)
PORTABLE FIRE EXTINGUISHERS SHALL BE INSTALLED IN THE FOLLOWING LOCATIONS:
IN NEW AND EXISTING GROUP S OCCUPANCIES (780 CMR 906.1)
FIRE EXTINGUISHERS FOR CLASS A FIRE HAZARD (780 CMR TABLE 906.3)

LOW HAZARD OCCUPANCY
MAXIMUM RATED SINGLE EXTINGUISHE2-AC
MAXIMUM FLOOR AREA PER UNIT OF A 3000 SF
MAXIMUM FLOOR AREA PER EXTINGUISHER 11,250 SF
MAXIMUM TRAVEL DISTANCE 75 FT

CHAPTER 10: MEANS OF EGRESS:
A. DESIGN OCCUPANT LOAD (IBC 2009, TABLE 1004.1.1)
1. PARKING GARAGES: 200 S.F./OCCUPANT (GROSS)
2. ACCESSORY STORAGE/MECHANICAL: 300 S.F./OCCUPANT (GROSS)
B. EGRESS WIDTH (IBC 2009 SEC.1005)
1. OCCUPANCIES, OTHER - 0.3 INCHES PER OCCUPANT FOR STAIRWAY WIDTH.
2. OCCUPANCIES, OTHER - 0.2 INCHES PER OCCUPANT FOR DOOR WIDTH.
C. GUARDS (IBC 2009 SEC 1013) - REQUIRED AT ALL OPEN-SIDED AREAS MORE THAN 30 INCHES ABOVE THE FLOOR OR GRADE BELOW.
1. HEIGHT: 42 INCHES (1013.2)
2. VEHICLE BARRIER: STRENGTH AND ATTACHMENT REQUIREMENTS PER IBC 1607.7.1.

D. NUMBER OF EXITS AND CONTINUITY - NOT LESS THAN TWO (780 CMR 1021).
1. OPEN EXIT STAIRWAYS PERMITTED (780 CMR 1022.1.4).
2. AREAS OF REFUGE: NOT REQUIRED FOR OPEN PARKING GARAGE (1007.3 EXCEPTION 5)
E. PARKING GARAGE RAMPS SHALL NOT BE CONSIDERED AS REQUIRED EXIT (IBC 406.2.5).
F. EXIT ACCESS:
1. EXIT ARRANGEMENT: MINIMUM EXIT SEPARATION DISTANCE EQUAL TO ONE-HALF THE OVERALL DIAGONAL DIMENSION OF THE AREA BEING SERVED (IBC 2009 1015.2.1).
2. MAX. TRAVEL DISTANCE (780 CMR, TABLE 1016.1):
a. S-2 OCCUPANCY (PARKING GARAGES): 300 FT.
G. DEAD END CORRIDORS SHALL BE 20 FT OR LESS (IBC 1018.4)
1. A DEAD-END CORRIDOR SHALL NOT BE LIMIITED IN LENGTH WHERE THE LENGTH OF THE DEAD-END CORRIDOR IS LESS THAN 2.5 TIMES THE LEAST WIDTH OF THE DEAD-END CORRIDOR

3

CODE COMPLIANCE CALCULATIONS

BUILDING HEIGHT: 52'-6"± (HIGHEST), 4 SUPPORTED STRUCTURAL LEVELS.

# OF TIERS	LEVEL AREA PROVIDED (S.F.)
1	23,758 S.F.
2	25,110 S.F.
3	25,110 S.F.
4	22,063 S.F.

OCCUPANT LOAD	TIER	AREA	DIVISOR	OCC.
	2	25,110 SF	/200	=126
	3	25,110 SF	/200	=126
	4	22,063 SF	/200	=110

GROUND LEVEL OCCUPANT LOAD:
1. PARKING AREAS: 23,758 SF / 200 = 119
2. ACCESSORY STORAGE/MECH. 720 SF / 300 = 3

EGRESS

1. OPEN PARKING GARAGE EGRESS WIDTH:
A) DOORS:
1) REQUIRED EXIT WIDTH = 126x0.2/2=13" OF DOOR WIDTH PER STAIR
2) PROVIDED EXIT WIDTH = 36" OK
B) STAIRS:
1) REQUIRED EXIT WIDTH = 126x0.3/2=19" OF STAIR WIDTH
2) REQUIRED EXIT WIDTH = NOT LESS THAN 44"
3) PROVIDED EXIT WIDTH = 60" OF WIDTH OK
C) MAX. TRAVEL DISTANCE (780 CMR , TABLE 1016.1) :
1) PARKING AREAS: PROVIDED MAX. TRAVEL DISTANCE = 200 FT<300 FT OK

ADA PARKING SPACES

ACCESSIBLE SPACES SHALL BE PROVIDED AS FOLLOWS (521 CMR 23.2.1)

201-300 SPACES ARE REQUIRED 7 ACCESSIBLE SPACES
PROVIDED: 8 ACCESSIBLE SPACES

VAN PARKING SPACES (ADA 208.2.4)
FOR EVERY SIX ACCESSIBLE SPACES AT LEAST ONE SHOULD BE VAN ACCESSIBLE PARKING SPACE:
7 SPACES / 6 = 2 VAN ACCESSIBLE SPACES REQUIRED
PROVIDED: 2 VAN ACCESSIBLE SPACE

VAN ACCESSIBLE SPACE REQUIREMENTS:
1. VERTICAL CLEARANCE 8'-2"
2. "VAN ACCESSIBLE" SIGNAGE
3. MIN. 8'-0" CLEAR WIDTH STALL WITH 8'-0" CLEAR ACCESS AISLE

ALL ADA SPACES ARE UNDER THE REQUIRED 2% TRANSVERSE SLOPE

REFERENCE SYMBOLS

BUILDING ELEVATION REFERENCE
SECTION REFERENCE
DETAIL REFERENCE
DOOR NUMBER
KEY NOTE - OR WINDOW NUMBER
REVISION
COLUMN GRID
ROOM NUMBER
INTERIOR ELEVATION
SIGN AND MOUNTING
INTERNATIONAL ACCESSIBILITY SYMBOL (ADA COMPLIANT)
XXX.XX FLOOR ELEVATION (IN FEET ABOVE DATUM)

3

OPENNESS CALCULATIONS:

LEVEL	1	2	3
TIER WALL AREA	6,629 S.F.	7,245 S.F.	7,245 S.F.
OPEN WALL AREA (25% REQ.)	2,599 S.F. (39.2%) OK	2,397 S.F. (33.1%) OK	2,744 S.F. (37.8%) OK
LENGTH OF PERIMETER WALL OF TIER	635 FT.	666 FT.	666 FT.
AGGR. LENGTH OF OPNG/TIER (40% REQ.)	405 FT (64%) OK	421 FT. (63%) OK	510 FT. (77%) OK

PARKING SUMMARY

LEVEL	CARS	HC	TOTALS	Area (SF)
GRADE LEVEL	54	8	62	23,758
SECOND LEVEL	73	0	73	25,110
THIRD LEVEL	75	0	75	25,110
FOURTH LEVEL	62	0	62	22,063
TOTAL	264	8	272	96,041
			353 SF/CAR	

ADD ALTERNATE/DEDUCT LISTING:

1. ADD THE 4X4 TUBE STEEL
2. ADD THE STAINLESS STEEL MESH AT EXTERIOR
3. ADD MESH UPLIGHTING
4. ADD RAILINGS TO TOP OF SPANDREL, LOWERING THE HEIGHT OF THE SPANDREL PANELS.

REFERENCE TO TECHNICAL SPECIFICATIONS FOR DETAILS

ABBREVIATIONS

@	AT	CB	CATCH BASIN	EA	EACH	G	GUTTER	K	KIPS	SCH	SCHEDULE	UL	UNDERWRITERS LABORATORIES
ACI	AMERICAN CONCRETE INSTITUTE	COND	CONDUIT	EF	EACH FACE	GA	GAUGE	KD	KNOCKED	SECT	SECTION	UON	UNLESS OTHERWISE NOTED
ADA	AMERICANS WITH DISABILITIES	CAB	CABINET	EL	ELEVATION	GALV	GALVANIZED	KO	KNOCKOUT	SF	SQUARE FEET	UNO	UNLESS NOTED OTHERWISE
ADD	ADDITIONAL	CEM	CEMENT	ELEC	ELECTRICAL	GB	GRADE BEAM	KSF	KIPS PER SQUARE FOOT	SHT	SHEET		
ADJ	ADJACENT	CER	CERAMIC	ELEV	ELEVATOR	GC	GENERAL CONTRACTOR	KSI	KIPS PER SQUARE INCH	SIM	SIMILAR	V	VOLTS
AFF	ABOVE FINISH FLOOR	CI	CAST IRON	EMERG	EMERGENCY	GEN	GENERAL	KW	KILOWATT	SK	SKETCH		
AGGR	AGGREGATE	CIP	CAST IN PLACE	EQ	EQUAL	GL	GLASS			SL	SLAB	WC	WATER CLOSET
AISC	AMERICAN INSTITUTE OF STEEL CONSTRUCTION	CJ	CONTROL JOINT	EQUIP	EQUIPMENT	GPM	GALLONS PER MINUTE	PASS	PASSENGER	SN	SINGLE	WD	WOOD
		CKT	CIRCUIT	EQUIV	EQUIVALENT	GRD	GRADE	PH	PANIC HARDWARE	SPEC	SPECIFICATION	W/O	WITHOUT
AL ALUM	ALUMINUM	CL	CENTER LINE	EW	EACH WAY	GYP	GYPSUM	PL	PLATE	SQ	SQUARE	WP	WEATHERPROOF
ALT	ALTERNATE	CMU	CONCRETE MASONRY UNITS	EWH	ELECTRIC WALL HEATER	GYP BD	GYPSUM BOARD	P	PROPERTY LINE	SS	STAINLESS STEEL	WWF	WELDED WIRE FABRIC
ANOD	ANODIZED	COL	COLUMN	EXH	EXHAUST			PLWD	PLYWOOD	ST	STREET	WWM	WELDED WIRE MESH
APPD	APPROVED	CONC	CONCRETE	EXIST	EXISTING	HDCP	HANDICAPPED	PNL	PANEL	STD	STANDARD		
APPROX	APPROXIMATE	CONN	CONNECTION	EXP	EXPANSION	HDR	HEADER	PPT	PARAPET	STL ST	STEEL		
ARCH	ARCHITECTURAL	CONST	CONSTRUCTION	EXP JT	EXPANSION JOINT	HDW	HARDWARE	PSI	POUNDS PER SQUARE INCH	STOR	STORAGE		
ASTM	AMERICAN SOCIETY FOR TESTING AND MATERIALS	CONT	CONTINUOUS	EXT	EXTERIOR	HK	HOOK	PT	POST-TENSIONED	STRUCT	STRUCTURAL		
		CONTR	CONTRACTOR			HM	HOLLOW METAL	PTD	PAINTED	SW	SWITCH		
		CORR	CORRIDOR	FD	FLOOR DRAIN	HORIZ	HORIZONTAL	PTN	PARTITION				
B/	BOTTOM OF	CRS	COURSE	FDN	FOUNDATION	HP	HIGH POINT	PJF	PREMOLDED JOINT FILLER	T	TREADS		
BC	BOTTOM OF CURBS			FE	FIRE EXTINGUISHER	HPS	HIGH PRESSURE SODIUM			T & B	TOP AND BOTTOM		
BD	BOARD	DBL	DOUBLE	FEC	FIRE EXTINGUISHER CABINET	HT HGT	HEIGHT	R RAD	RADIUS	T/BM	TOP OF BEAM		
BIT	BITUMINOUS	DD	DECK DRAIN	FHC	FIRE HOSE CABINET	HTR	HEATER	R	RISERS	TC	TOP OF CURB		
BIT PAV'T	BITUMINOUS PAVEMENT	DEPT	DEPARTMENT	FIN	FINISHED	HVAC	HEATING VENTILATING AND AIR CONDITIONING	RB	ROOF BEAM	TEL	TELEPHONE		
BLDG	BUILDING	DIA	DIAMETER	FL FLR	FLOOR			RD	ROOF DRAIN	TEM	TEMPERED		
BLK	BLOCK	DIM	DIMENSION	FLOUR	FLUORESCENT	HW	HOT WATER	RECEPT	RECEPTACLE	TEMP	TEMPERATURE		
BM	BEAM	DL	DEAD LOAD	FSP	FIRE STAND PIPE	HWY	HIGHWAY	REINF	REINFORCING	TH THK	THICK		
BOTT BOT	BOTTOM	DN	DOWN	FTG	FOOTING			REQD	REQUIRED	TO T/	TOP OF		
BRG	BEARING	DS	DOWN SPOUT	FT (')	FEET	ID	INSIDE DIAMETER	RET	RETAINING	TOIL	TOILET		
BS	BOTH SIDES	DTL	DETAIL	FTG	FOOTING	IE	INVERT ELEVATION	RF	ROOF	TOS T/SL	TOP OF SLAB		
BSMT	BASEMENT	DWG	DRAWING	FURR	FURRING	IN (")	INCH	RH	RIGHT HAND	TOS T/S	TOP OF STEEL		
BTWN	BETWEEN	DWLS	DOWELS	FUT	FUTURE	INFO	INFORMATION	RM	ROOM	TOW T/W	TOP OF WALL		
						INSUL	INSULATION	RO	ROUGH OPENING	T/PC	TOP OF PILE CAP		
						INT	INTERIOR	ROW	RIGHT OF WAY	TYP	TYPICAL		
						INV	INVERT						
						JT	JOINT						

DESMAN Design Management

Olive Street Parking Facility

Olive Street
Greenfield, MA

CONSTRUCTION DOCUMENTS - BID SET

ISSUE

NO.	DESCRIPTION	DATE
3	100% CD- MOD. 1	08/01/17

Copyright © 2017 DESMAN, Inc. All rights reserved. No part of these documents may be reproduced in any form or by any means without written permission from DESMAN, Inc.

DRAWING TITLE:
CODE SUMMARY

DRAWING NO:
A001

SCALE: As indicated
DATE: 09/06/2017
PROJECT NO: 20-16105.01-1

DES.	DRWN.	CHK'D.
WJW	ALL	WJW

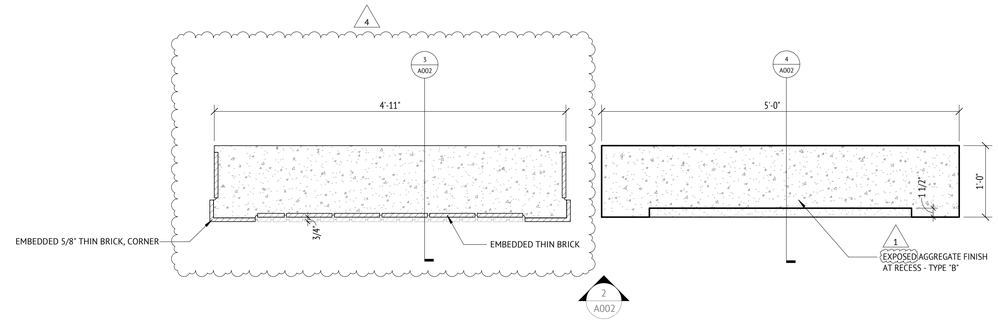

1 PRECAST MOCK UP PLAN
1" = 1'-0"

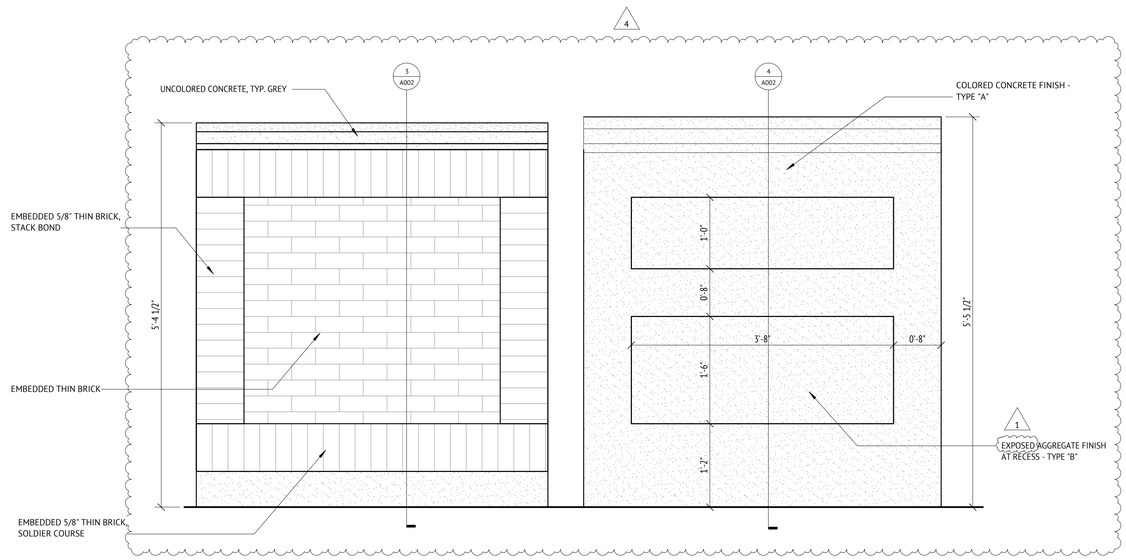

2 PRECAST MOCK UP ELEVATION
1" = 1'-0"

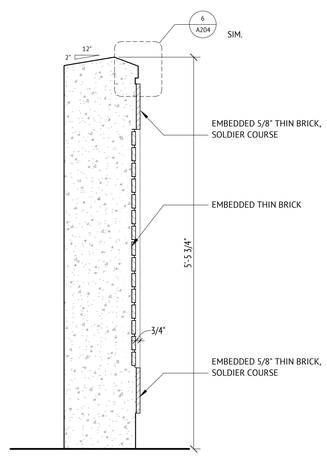

3 PRECAST MOCK UP - SECTION 1
1" = 1'-0"

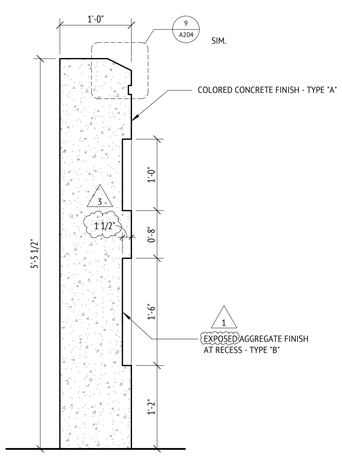

4 PRECAST MOCK UP - SECTION 2
1" = 1'-0"

JWA JONES WHITSETT ARCHITECTS
308 Main Street, Greenfield, MA 01301 T: 413.773.5551

DESMAN Design Management

Olive Street Parking Facility

Olive Street
Greenfield, MA

CONSTRUCTION DOCUMENTS - BID SET

ISSUE

NO.	DESCRIPTION	DATE
4	Permit Set	08/23/17
3	100% CD- MOD. 1	08/01/17
1	Addendum 1	06/02/17

Copyright © 2017 Desman, Inc. All rights reserved. No Part of these documents may be reproduced in any form or by any means without written permission from DESMAN, Inc.

DRAWING TITLE:
MOCK UP DETAILS

DRAWING NO:
A002

SCALE: 1" = 1'-0"
DATE: 09/06/2017
PROJECT NO: 20-16105.01-1

DES.	DRWN.	CHK'D.
JWA	HDA	KW

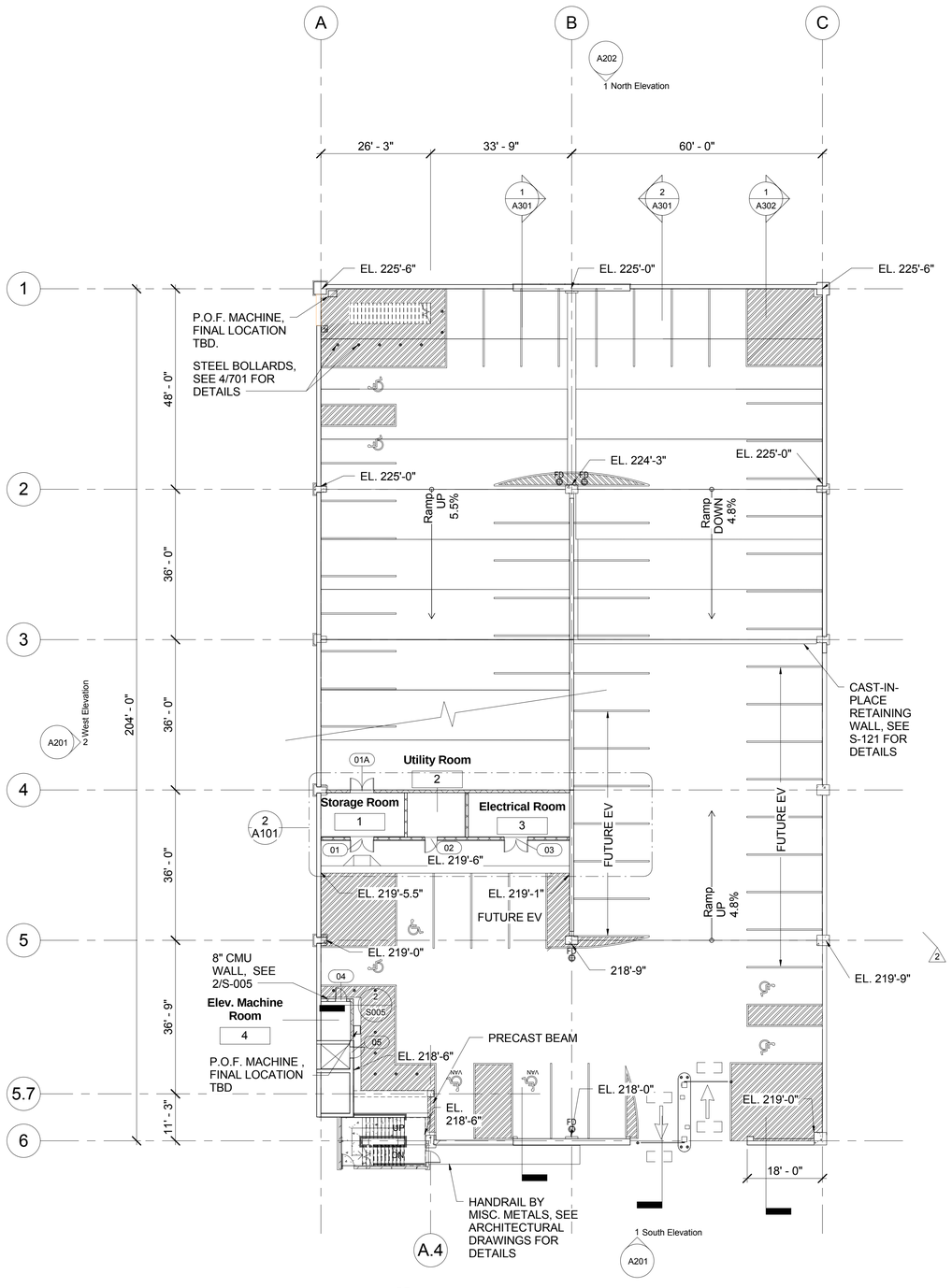

1 A101 **Grade Level Striping Plan**
1/16" = 1'-0"

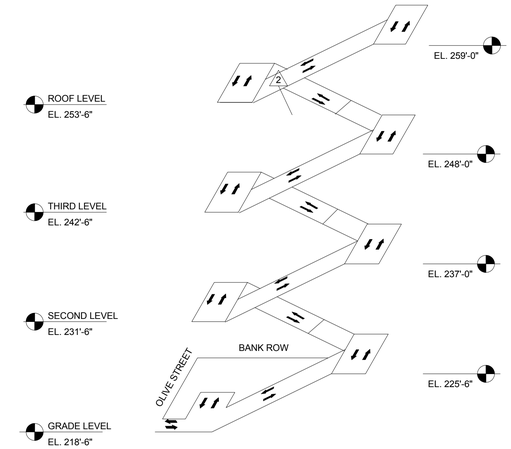

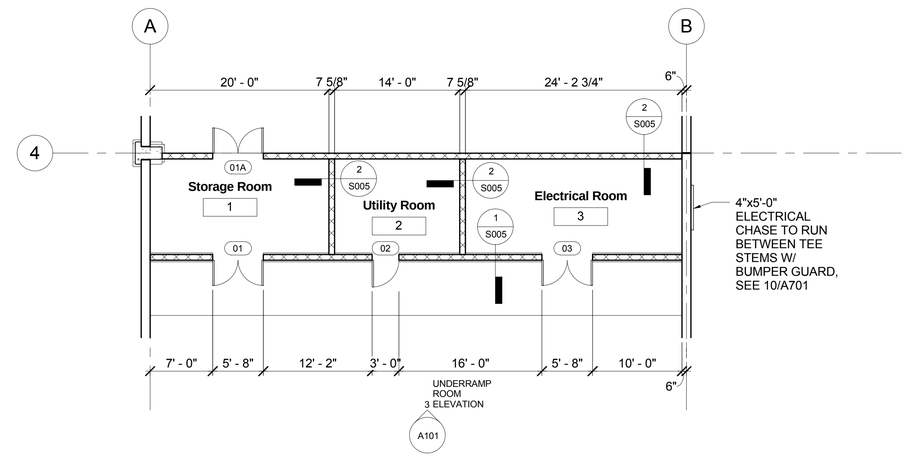

2 A101 **UNDERRAMP ROOM DETAIL PLAN**
1/8" = 1'-0"

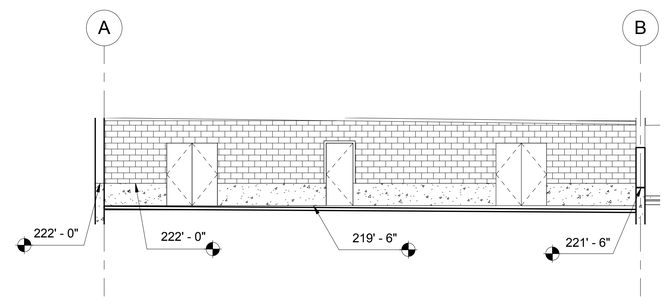

NOTE: CURB HEIGHT TO VARY AT THIS ELEVATION

3 A101 **UNDERRAMP ROOM ELEVATION**
1/8" = 1'-0"

DESMAN Design Management

Olive Street Parking Facility

Olive Street
Greenfield, MA

CONSTRUCTION DOCUMENTS - BID SET

ISSUE

NO.	DESCRIPTION	DATE
2	100% CD	07/10/17

Copyright © 2017 DESMAN, Inc. All rights reserved. No part of these documents may be reproduced in any form or by any means without written permission from DESMAN, Inc.

DRAWING TITLE:
GRADE LEVEL FLOOR PLAN

DRAWING NO:
A101

SCALE: As indicated
DATE: 09/06/2017
PROJECT NO: 20-16105.01-1

DES.	DRWN.	CHK'D.
WJW	ALL	WTF

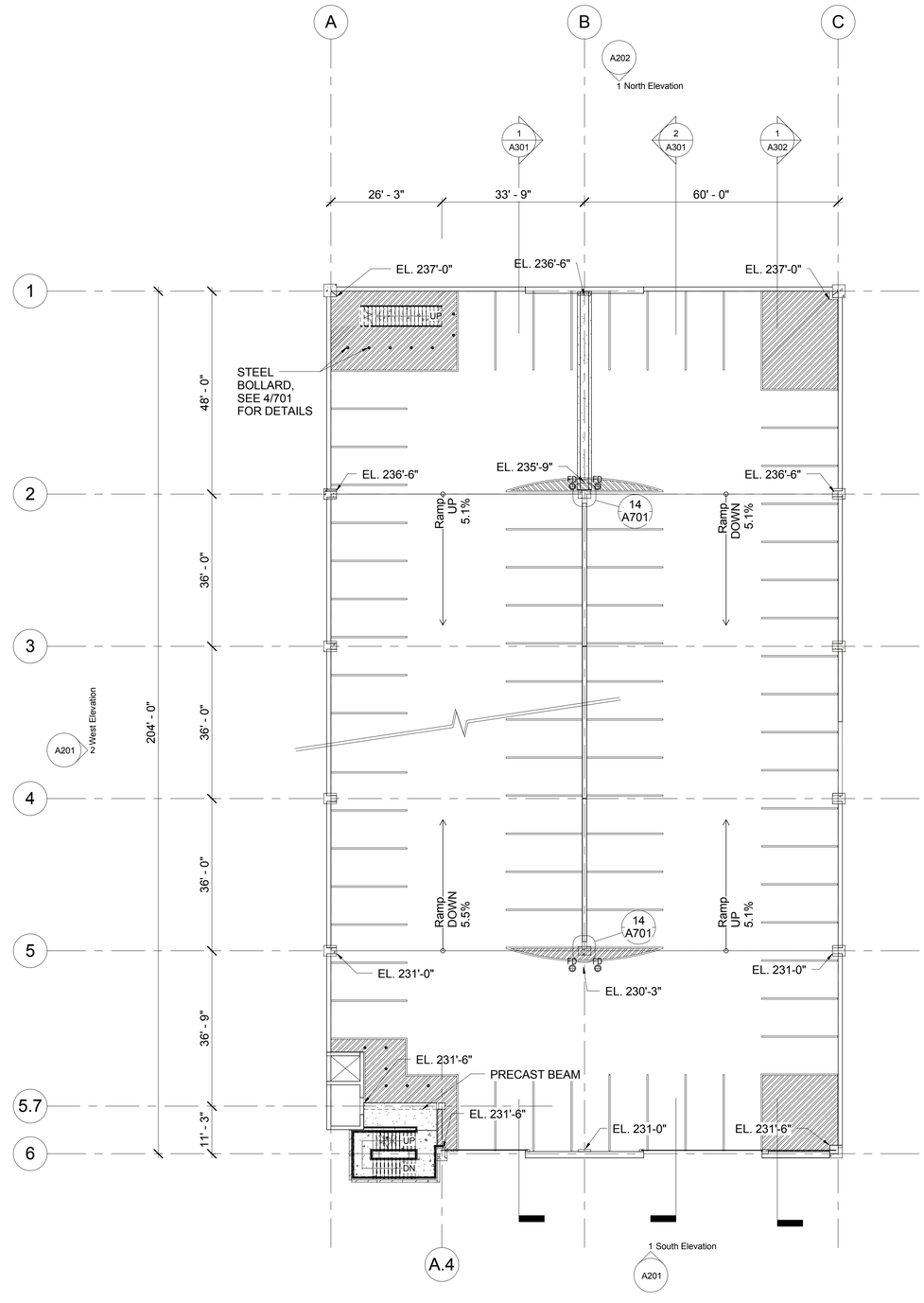

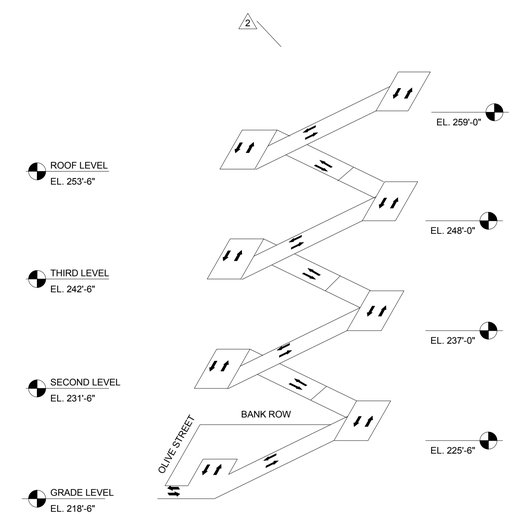

1 / A102 **2nd Level Striping Plan**
1/16" = 1'-0"

DESMAN
Design Management

Olive Street Parking Facility

Olive Street
Greenfield, MA

CONSTRUCTION DOCUMENTS - BID SET

ISSUE

NO.	DESCRIPTION	DATE
2	100% CD	07/10/17

Copyright © 2017 DESMAN, Inc. All rights reserved. No part of these documents may be reproduced in any form or by any means without written permission from DESMAN, Inc.

DRAWING TITLE:
SECOND LEVEL FLOOR PLAN

DRAWING NO:
A102

SCALE: As indicated
DATE: 09/06/2017
PROJECT NO: 20-16105.01-1

DES.	DRWN.	CHK'D.
WJW	ALL	WTF

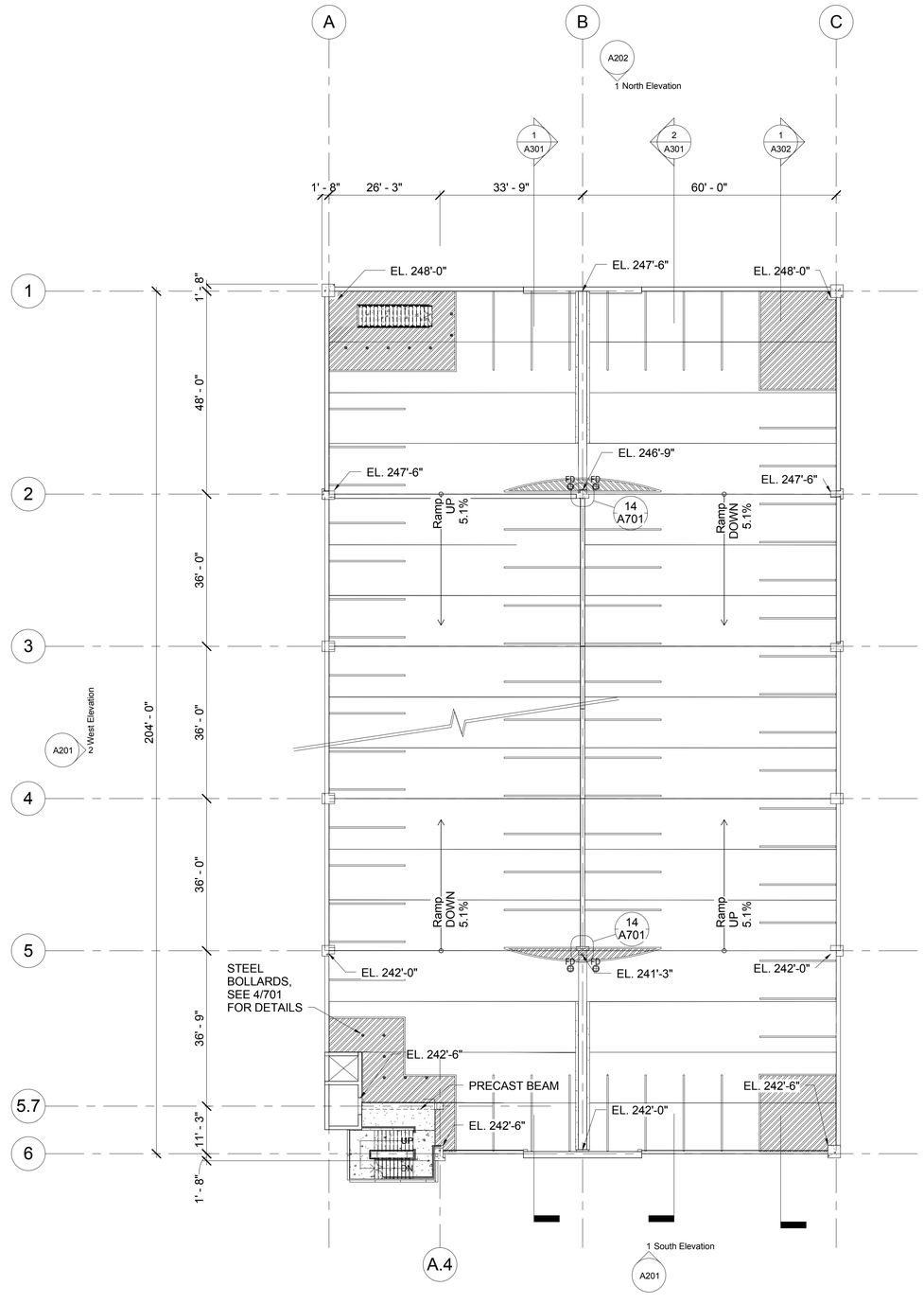

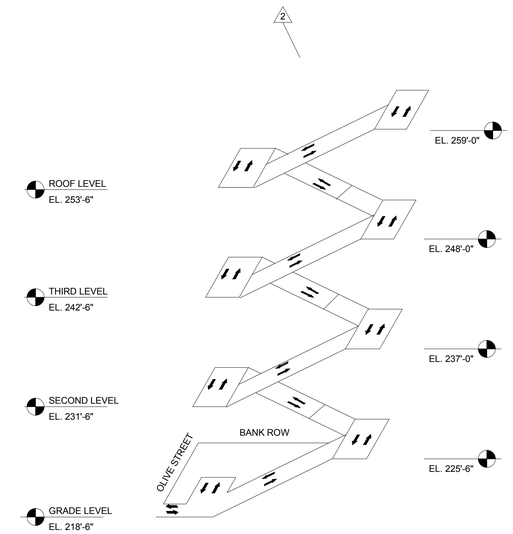

1 / A103 **3rd Level Striping Plan**
1/16" = 1'-0"

DESMAN
Design Management

Olive Street Parking Facility

Olive Street
Greenfield, MA

CONSTRUCTION DOCUMENTS - BID SET

ISSUE

NO.	DESCRIPTION	DATE
2	100% CD	07/10/17

Copyright © 2017 DESMAN, Inc. All rights reserved. No part of these documents may be reproduced in any form or by any means without written permission from DESMAN, Inc.

DRAWING TITLE:
THIRD LEVEL FLOOR PLAN

DRAWING NO:
A103

SCALE: As indicated
DATE: 09/06/2017
PROJECT NO: 20-16105.01-1

DES.	DRWN.	CHK'D.
WJW	ALL	WTF

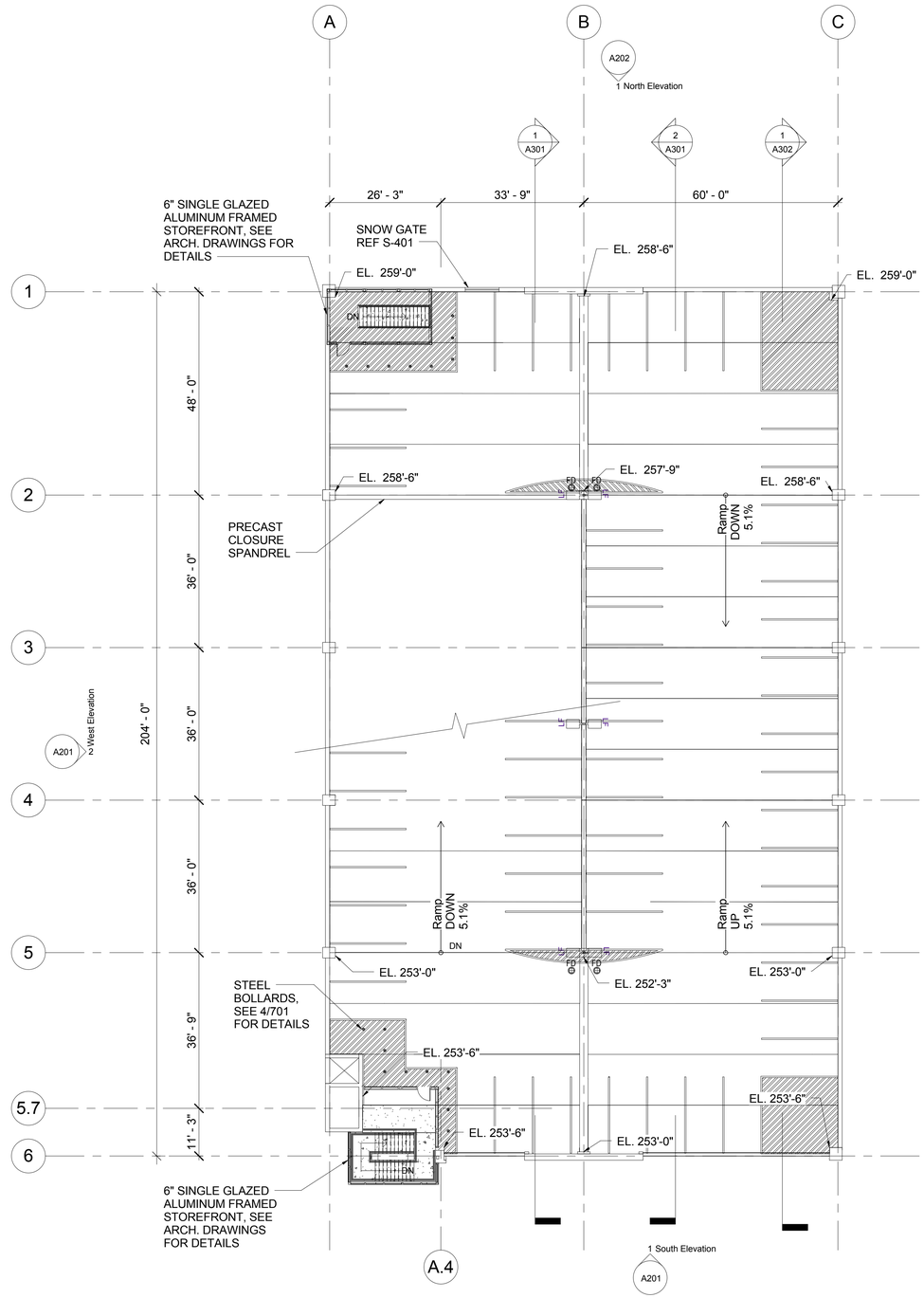

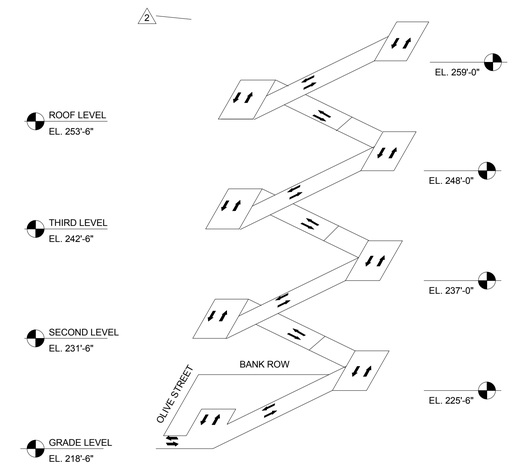

1 / A104 **Roof Level Striping Plan**
1/16" = 1'-0"

2

DESMAN
Design Management

Olive Street Parking Facility

Olive Street
Greenfield, MA

CONSTRUCTION DOCUMENTS - BID SET

ISSUE

NO.	DESCRIPTION	DATE
2	100% CD	07/10/17

Copyright © 2017 DESMAN, Inc. All rights reserved. No part of these documents may be reproduced in any form or by any means without written permission from DESMAN, Inc.

DRAWING TITLE:
ROOF LEVEL FLOOR PLAN

DRAWING NO:
A104

SCALE: As indicated
DATE: 09/06/2017
PROJECT NO: 20-16105.01-1

DES.	DRWN.	CHK'D.
WJW	ALL	WJW

PRECAST FINISH SCHEDULE

ELEMENT	COLOR	FINISH
ELEVATOR SHAFT	TINT TYPE 1 (RED)	LIGHT SANDBLAST / BRUSHED (TYPE A)
NORTH SHEAR WALL	UNTINTED	LIGHT SANDBLAST / BRUSHED (TYPE A)
NORTH SPANDREL PANELS	TINT TYPE 1 (RED)	LIGHT SANDBLAST / BRUSHED (TYPE A)
PRECAST COLUMNS	TINT TYPE 2 (WHITE)	LIGHT SANDBLAST / BRUSHED (TYPE A)
PRECAST COLUMNS, INSET	TINT TYPE 2 (WHITE)	EXPOSED AGGREGATE FINISH (TYPE B)
SOUTH SHEAR WALL	UNTINTED	LIGHT SANDBLAST / BRUSHED (TYPE A)
SPANDREL PANELS, FRAME	TINT TYPE 1 (RED)	LIGHT SANDBLAST / BRUSHED (TYPE A)
SPANDREL PANELS, INSET	TINT TYPE 1 (RED)	EXPOSED AGGREGATE FINISH (TYPE B)

JWA JONES WHITSETT ARCHITECTS
308 Main Street, Greenfield, MA 01301 T: 413.773.5551

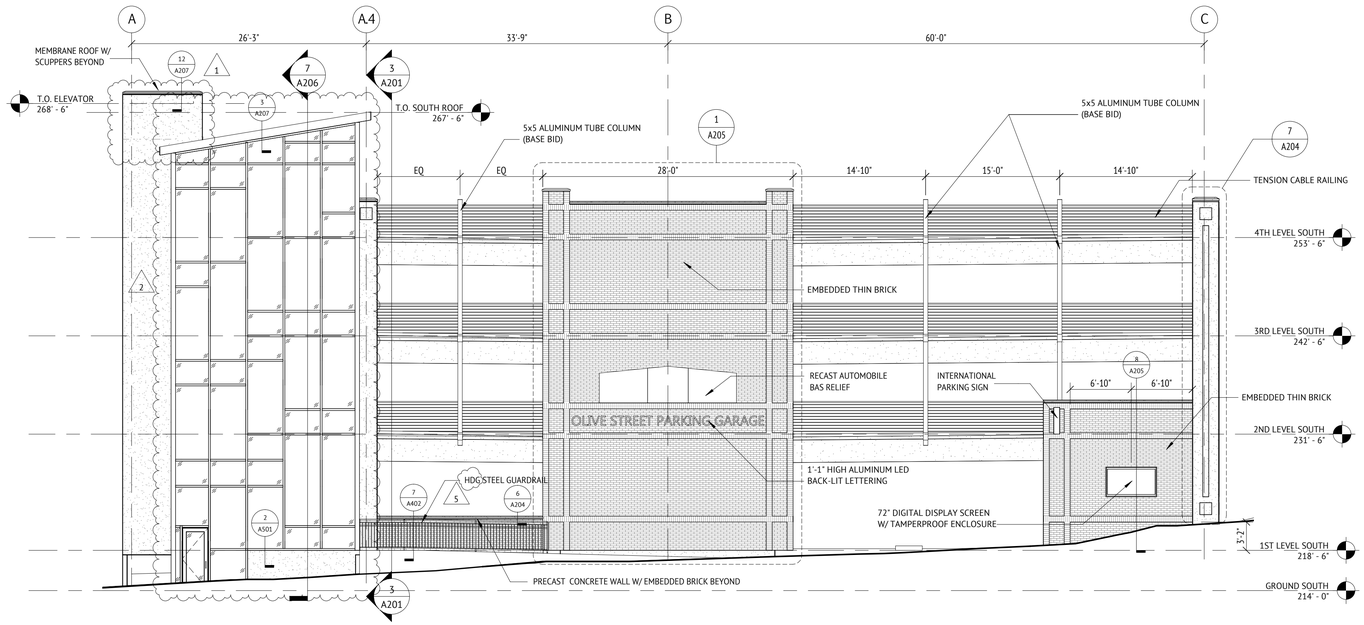

1 SOUTH ELEVATION
1/8" = 1'-0"

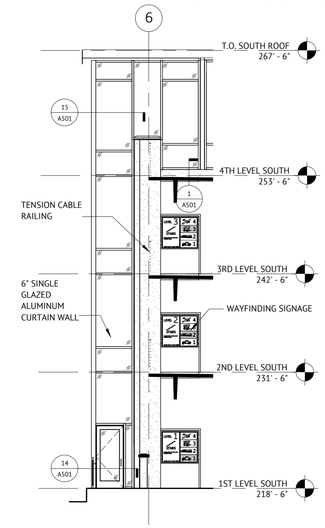

3 SOUTH STAIR EAST ELEVATION & SECTION
1/8" = 1'-0"

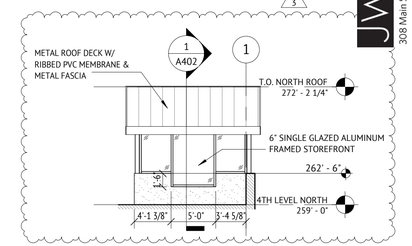

4 EAST ELEVATION, NORTH STAIR
1/8" = 1'-0"

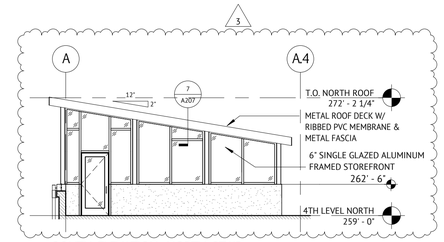

5 SOUTH ELEVATION, NORTH STAIR
1/8" = 1'-0"

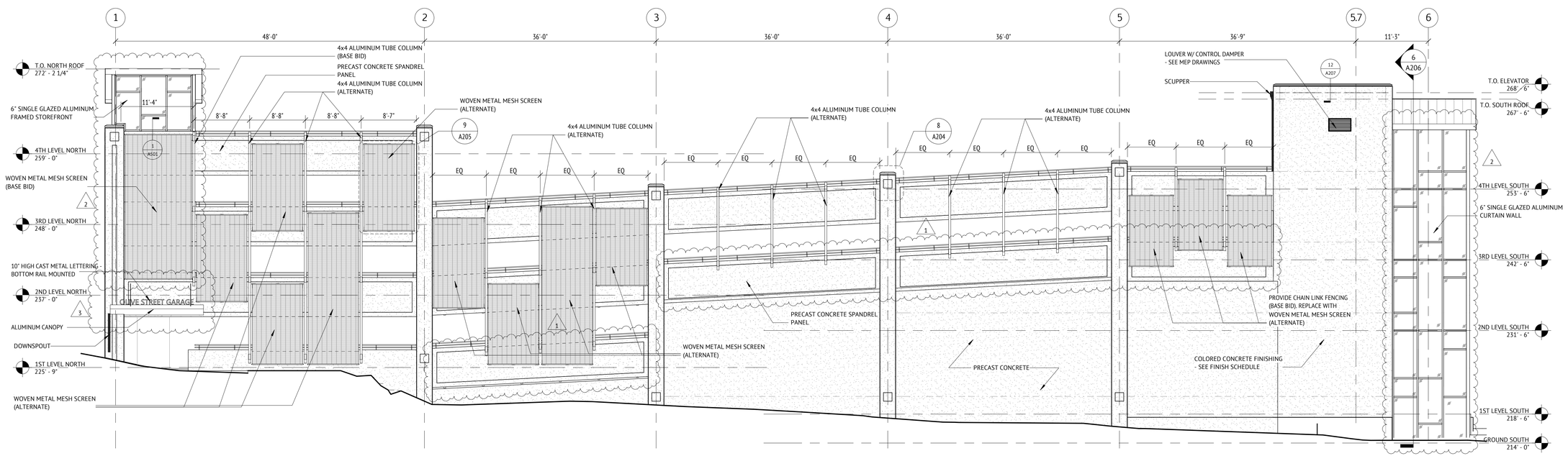

2 WEST ELEVATION
1/8" = 1'-0"

DESMAN Design Management

Olive Street Parking Facility

Olive Street
Greenfield, MA

CONSTRUCTION DOCUMENTS - BID SET

ISSUE

NO.	DESCRIPTION	DATE
5	CD - Bid Set	09/06/17
4	Permit Set	08/23/17
3	100% CD- MOD. 1	08/01/17
2	100% CD	07/10/17
1	Addendum 1	06/02/17

Copyright © 2017 Desman, Inc. All rights reserved. No Part of these documents may be reproduced in any form or by any means without written permission from DESMAN, Inc.

DRAWING TITLE:
EXTERIOR ELEVATIONS

DRAWING NO:
A201

SCALE: 1/8" = 1'-0"
DATE: 09/06/2017
PROJECT NO: 20-16105.01-1

DES.	DRWN.	CHK'D.
JWA	HDA	KW

PRECAST FINISH SCHEDULE		
ELEMENT	COLOR	FINISH
ELEVATOR SHAFT	TINT TYPE 1 (RED)	LIGHT SANDBLAST / BRUSHED (TYPE A)
NORTH SHEAR WALL	UNTINTED	LIGHT SANDBLAST / BRUSHED (TYPE A)
NORTH SPANDREL PANELS	TINT TYPE 1 (RED)	LIGHT SANDBLAST / BRUSHED (TYPE A)
PRECAST COLUMNS	TINT TYPE 2 (WHITE)	LIGHT SANDBLAST / BRUSHED (TYPE A)
PRECAST COLUMNS, INSET	TINT TYPE 2 (WHITE)	EXPOSED AGGREGATE FINISH (TYPE B)
SOUTH SHEAR WALL	UNTINTED	LIGHT SANDBLAST / BRUSHED (TYPE A)
SPANDREL PANELS, FRAME	TINT TYPE 1 (RED)	LIGHT SANDBLAST / BRUSHED (TYPE A)
SPANDREL PANELS, INSET	TINT TYPE 1 (RED)	EXPOSED AGGREGATE FINISH (TYPE B)

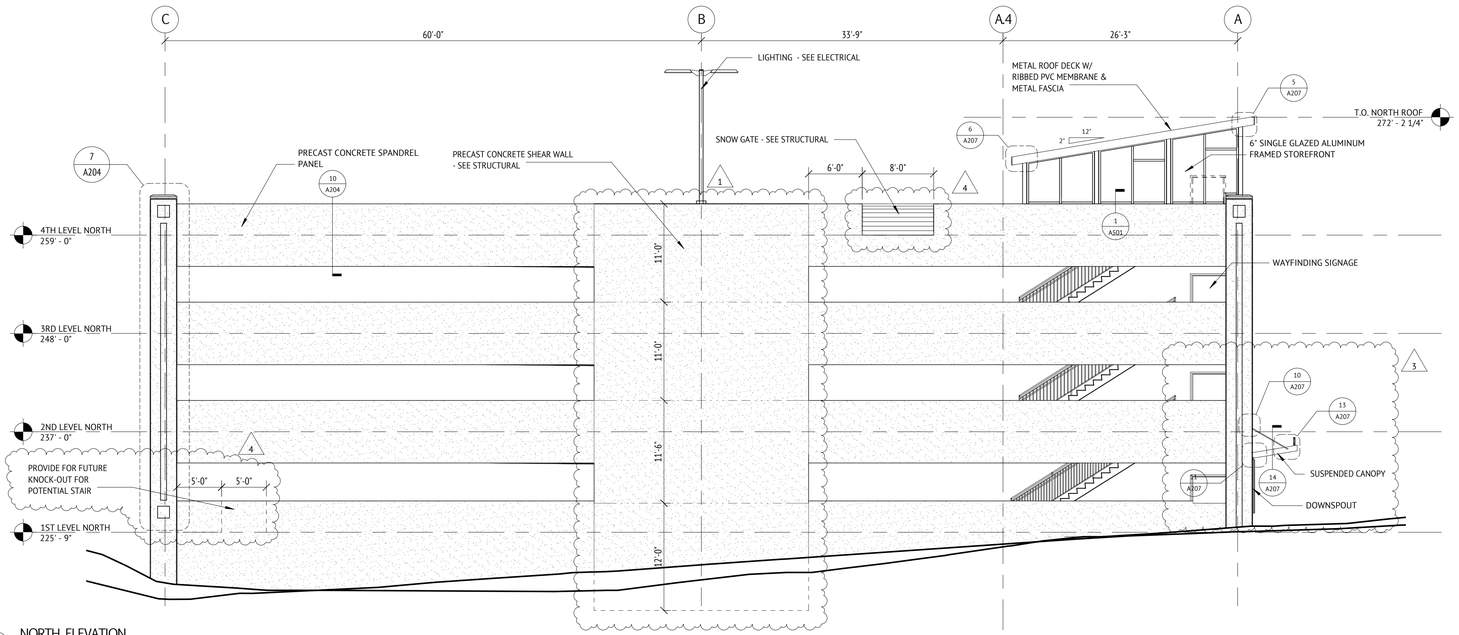

1 NORTH ELEVATION
1/8" = 1'-0"

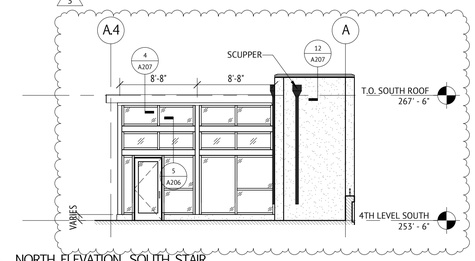

3 NORTH ELEVATION, SOUTH STAIR
1/8" = 1'-0"

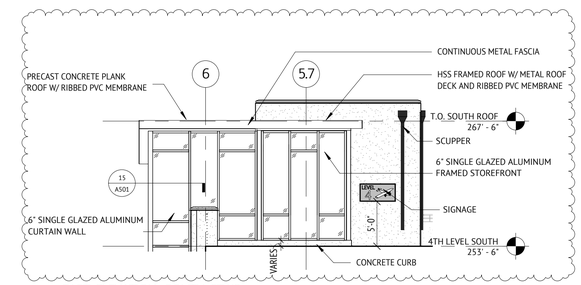

4 EAST ELEVATION, SOUTH STAIR
1/8" = 1'-0"

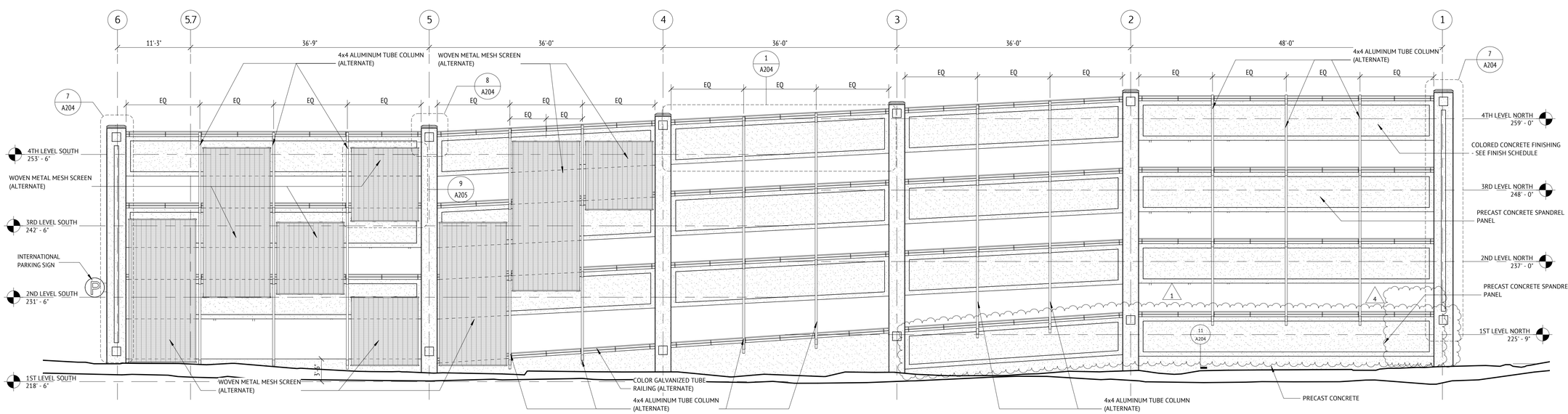

2 EAST ELEVATION
1/8" = 1'-0"

JWA JONES WHITSETT ARCHITECTS
308 Main Street, Greenfield, MA 01301 T: 413.773.5551

DESMAN Design Management

Olive Street Parking Facility

Olive Street
Greenfield, MA

CONSTRUCTION DOCUMENTS - BID SET

ISSUE

NO.	DESCRIPTION	DATE
4	Permit Set	08/23/17
3	100% CD- MOD. 1	08/01/17
1	Addendum 1	06/02/17

Copyright © 2017 Desman, Inc. All rights reserved. No Part of these documents may be reproduced in any form or by any means without written permission from DESMAN, Inc.

DRAWING TITLE:
EXTERIOR ELEVATIONS

DRAWING NO:
A202

SCALE: 1/8" = 1'-0"
DATE: 09/06/2017
PROJECT NO: 20-16105.01-1

DES.	DRWN.	CHK'D.
JWA	HDA	KW

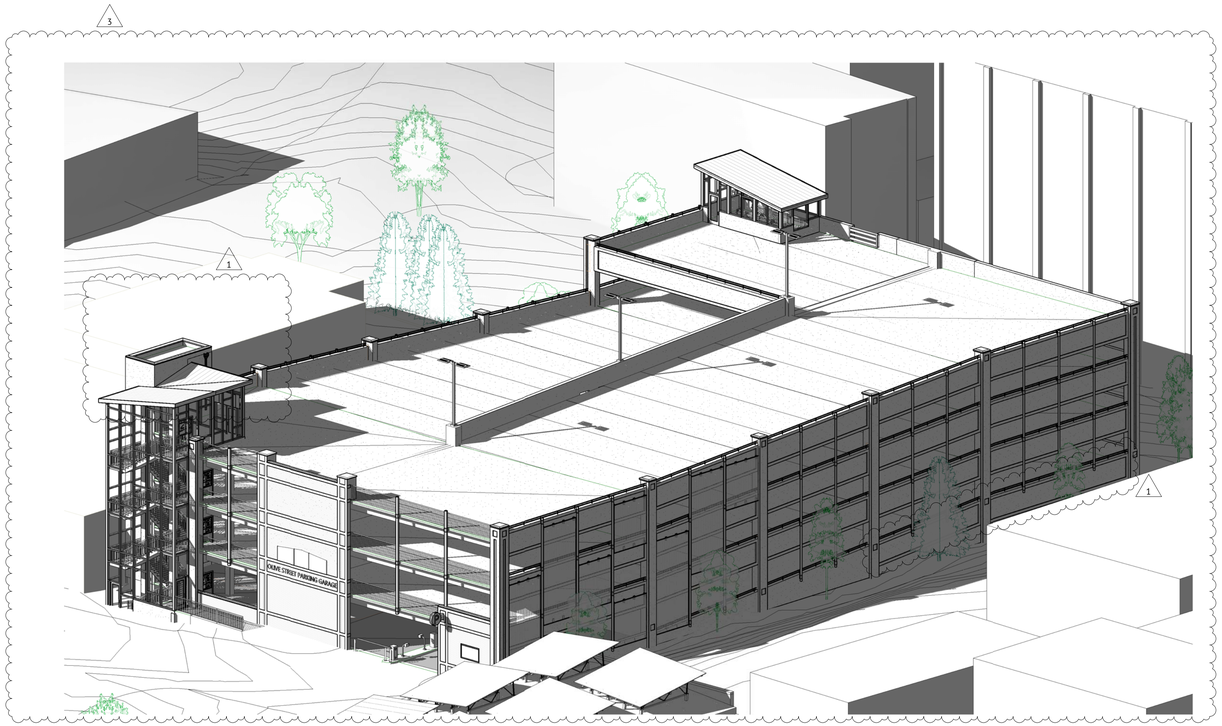

1 VIEW FACING NORTHWEST

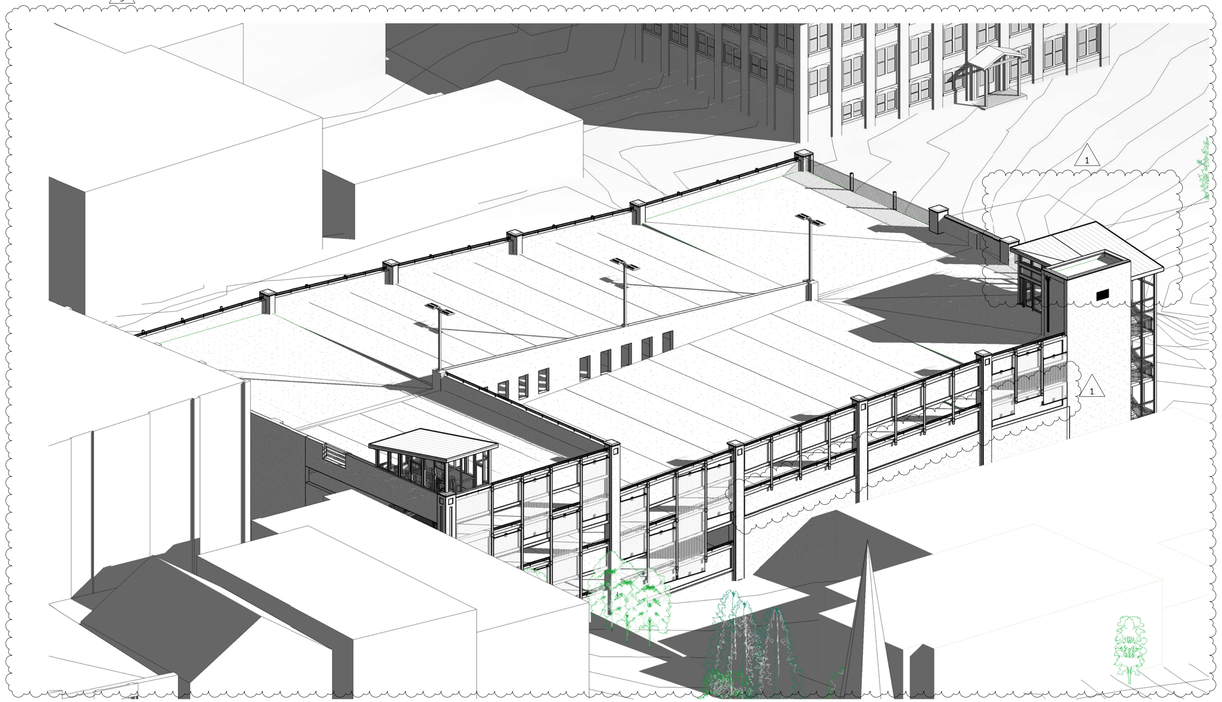

2 VIEW FACING SOUTHEAST

JWA JONES WHITSETT ARCHITECTS
308 Main Street, Greenfield, MA 01301 T: 413.773.5551

DESMAN Design Management

Olive Street Parking Facility

Olive Street
Greenfield, MA

CONSTRUCTION DOCUMENTS - BID SET

ISSUE

NO.	DESCRIPTION	DATE
3	100% CD- MOD. 1	08/01/17
1	Addendum 1	06/02/17

Copyright © 2017 Desman, Inc. All rights reserved. No Part of these documents may be reproduced in any form or by any means without written permission from DESMAN, Inc.

DRAWING TITLE:
ISOMETRIC VIEWS

DRAWING NO:
A203

SCALE:
DATE: 09/06/2017
PROJECT NO: 20-16105.01-1

DES.	DRWN.	CHK'D.
JWA	HDA	KW

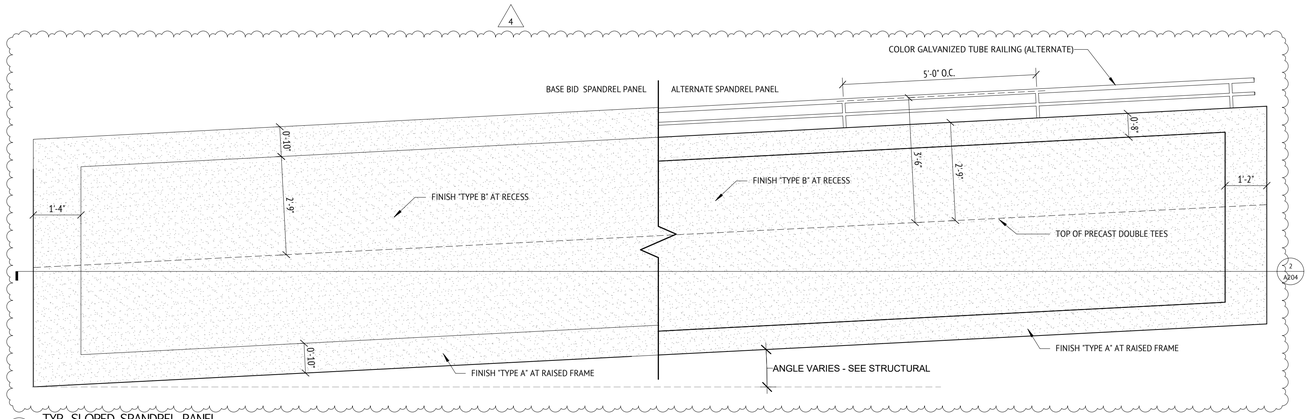

1 TYP. SLOPED SPANDREL PANEL
1/2" = 1'-0"

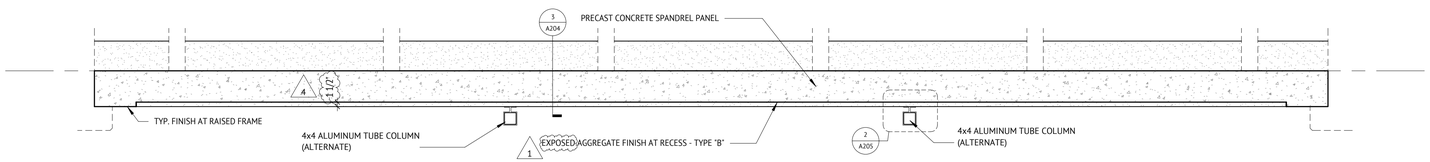

2 PRECAST SPANDREL PLAN SECTION
1/2" = 1'-0"

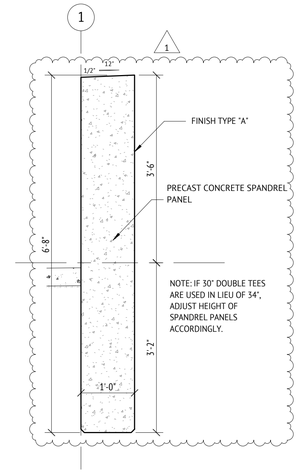

10 N. SPANDREL PANEL SECTION
3/4" = 1'-0"

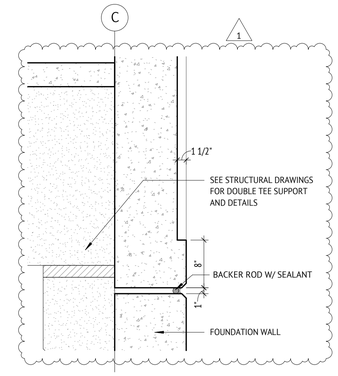

11 SPANDREL PANEL AT FOUNDATION WALL
1" = 1'-0"

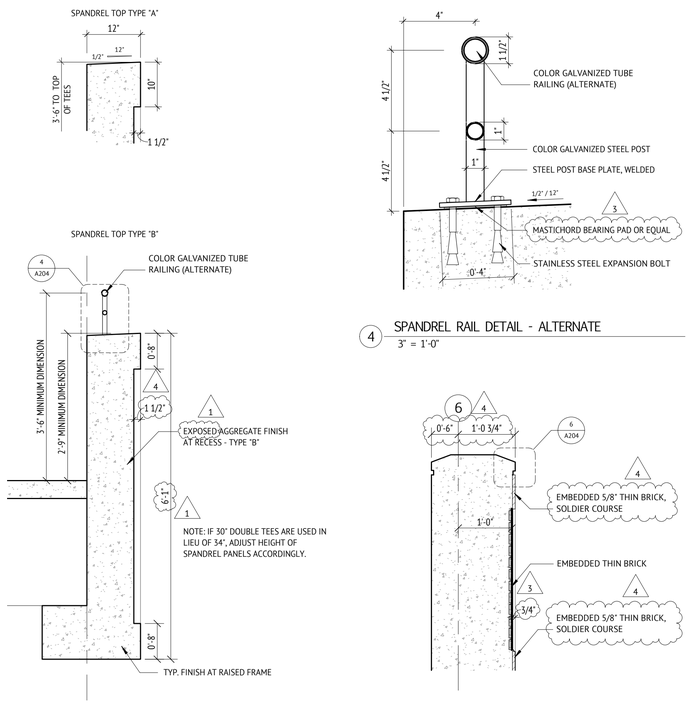

3 PRECAST SPANDREL SECTION
3/4" = 1'-0"

4 SPANDREL RAIL DETAIL - ALTERNATE
3" = 1'-0"

5 SOUTH SHEAR WALL DETAIL
3/4" = 1'-0"

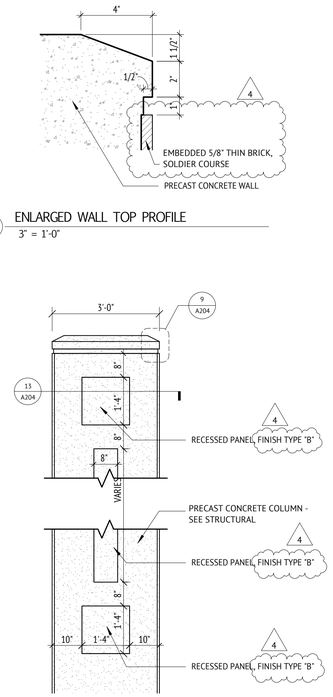

6 ENLARGED WALL TOP PROFILE
3" = 1'-0"

7 CORNER COLUMN DETAIL ELEVATION
1/2" = 1'-0"

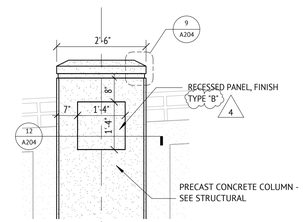

8 TYP. COLUMN ENLARGED ELEVATION
1/2" = 1'-0"

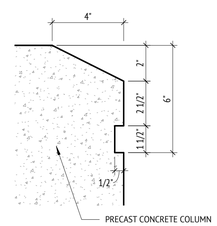

9 ENLARGED COLUMN TOP PROFILE
3" = 1'-0"

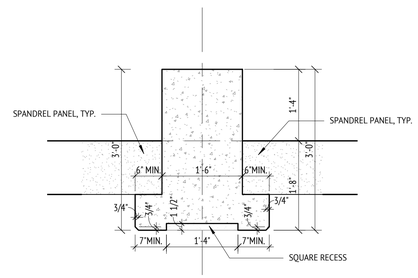

12 TYP. COLUMN PLAN DETAIL
3/4" = 1'-0"

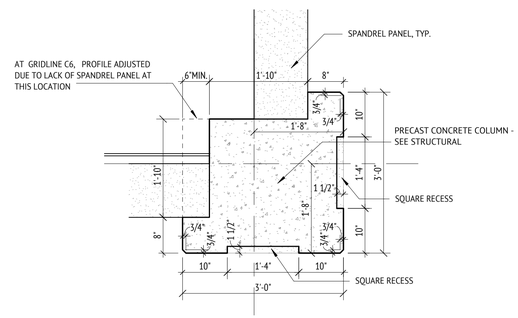

13 TYP. CORNER COLUMN PLAN DETAIL
3/4" = 1'-0"

JWA JONES WHITSETT ARCHITECTS
308 Main Street, Greenfield, MA 01301 T: 413.773.5551

DESMAN Design Management

Olive Street Parking Facility

Olive Street
Greenfield, MA

CONSTRUCTION DOCUMENTS - BID SET

ISSUE

NO.	DESCRIPTION	DATE
4	Permit Set	08/23/17
3	100% CD- MOD. 1	08/01/17
1	Addendum 1	06/02/17

Copyright © 2017 Desman, Inc. All rights reserved. No Part of these documents may be reproduced in any form or by any means without written permission from DESMAN, Inc.

DRAWING TITLE:
ELEVATION DETAILS

DRAWING NO:
A204

SCALE: As indicated
DATE: 09/06/2017
PROJECT NO: 20-16105.01-1

DES.	DRWN.	CHK'D.
JWA	HDA	KW

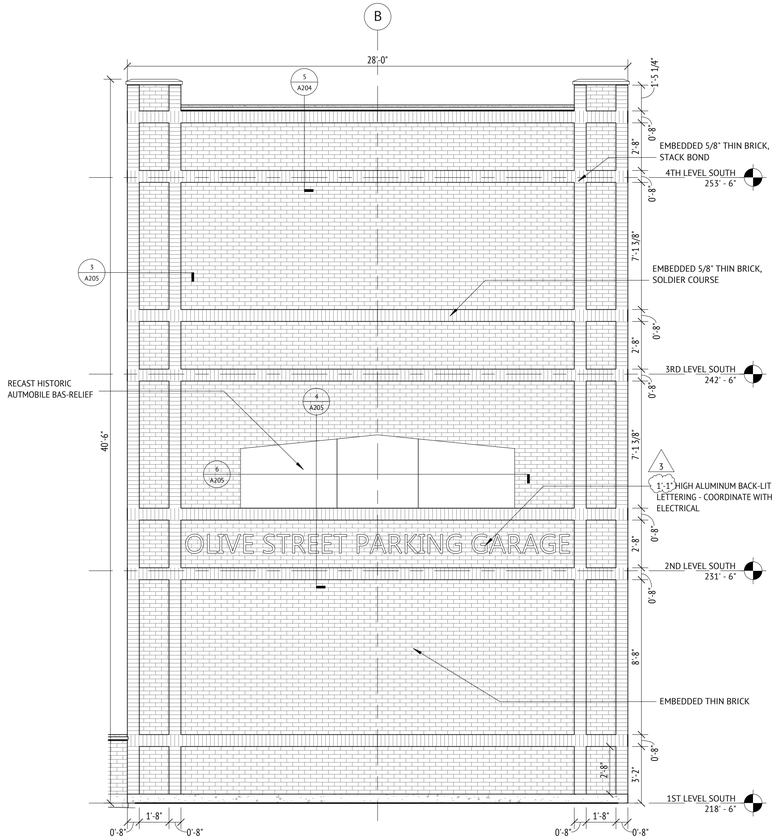

1 SOUTH WALL DETAIL ELEVATION
1/4" = 1'-0"

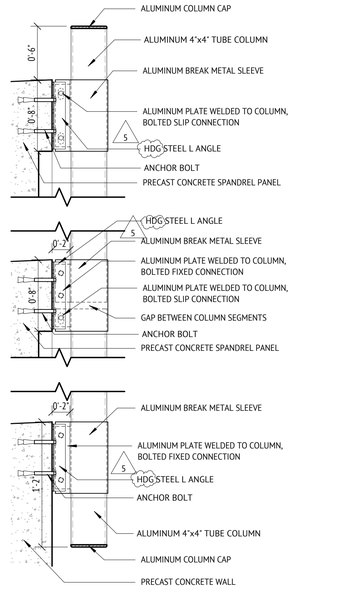

5 ALUMINUM COLUMN ATTACHMENT DETAIL
1 1/2" = 1'-0"

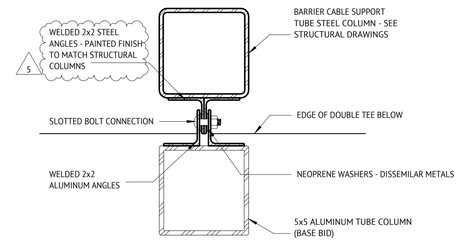

7 SOUTH COLUMN DETAIL
3" = 1'-0"

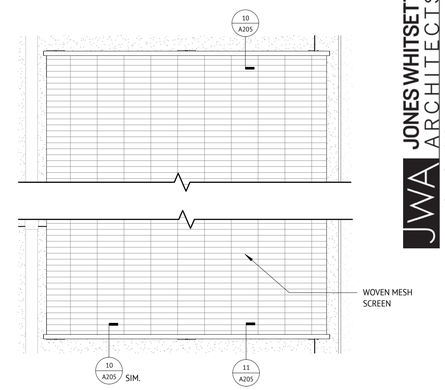

9 WOVEN MESH SCREEN
1/2" = 1'-0"

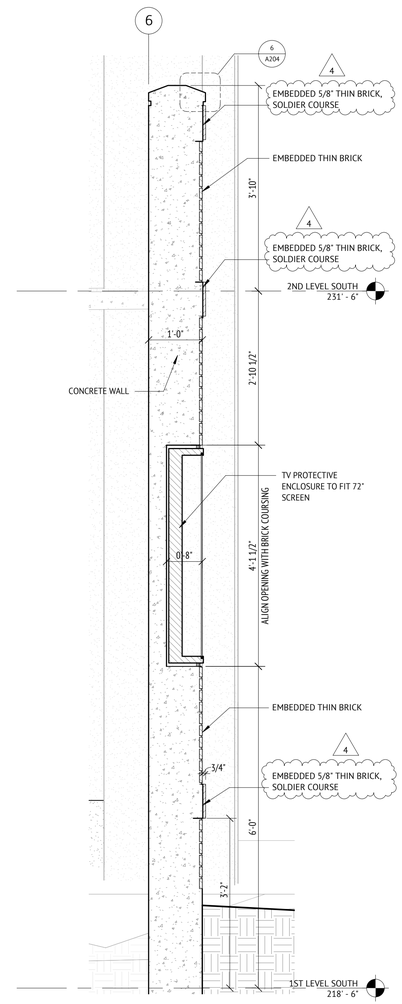

8 RECESSED DIGITAL SCREEN DETAIL
3/4" = 1'-0"

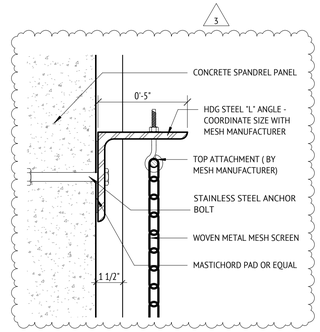

10 WOVEN METAL MESH DETAIL, SPANDREL RECESS
3" = 1'-0"

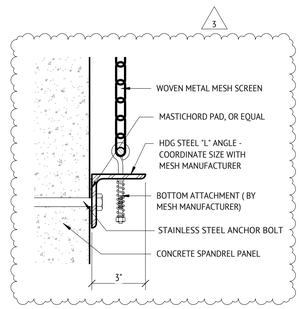

11 WOVEN METAL MESH DETAIL, SPRANDREL EDGE
3" = 1'-0"

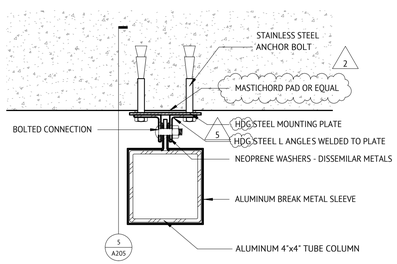

2 ALUMINUM COLUMN DETAIL
3" = 1'-0"

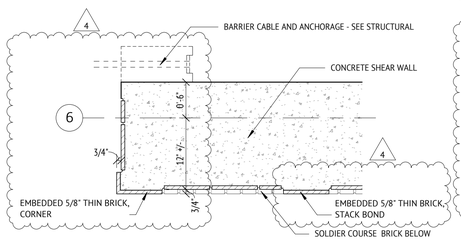

3 THIN BRICK PLAN DETAIL
1" = 1'-0"

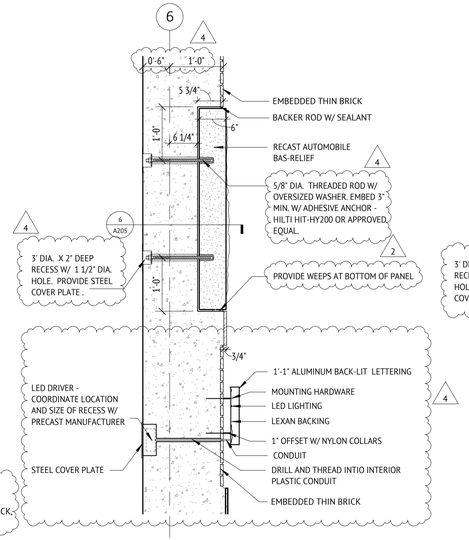

4 RECAST AUTO BAS-RELIEF & ALUM LETTERING DETAIL
3/4" = 1'-0"

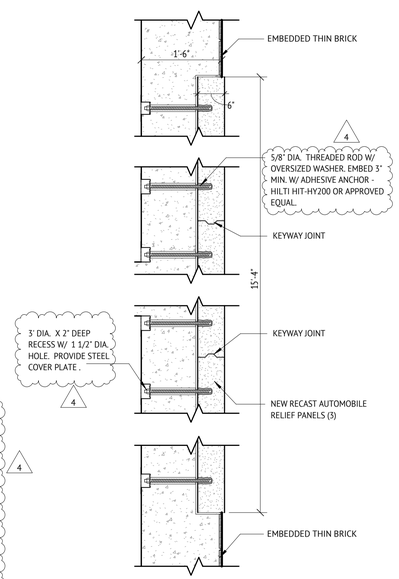

PROVIDE MIN. 3 TOP CONNECTIONS PER INDIVIDUAL PANEL

6 RECAST AUTOMOBILE RELIEF PLAN DETAIL
3/4" = 1'-0"

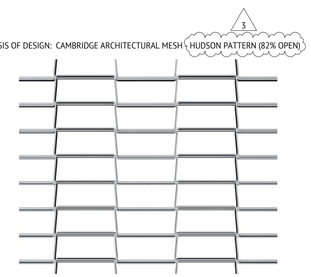

(IMAGE OF WOVEN METAL MESH PATTERN FOR REFERENCE ONLY)

12 WOVEN METAL MESH PATTERN
NOT TO SCALE

JWA JONES WHITSETT ARCHITECTS
308 Main Street, Greenfield, MA 01301 T: 413.773.5551

DESMAN Design Management

Olive Street Parking Facility

Olive Street
Greenfield, MA

CONSTRUCTION DOCUMENTS - BID SET

ISSUE

NO.	DESCRIPTION	DATE
5	CD - Bid Set	09/06/17
4	Permit Set	08/23/17
3	100% CD- MOD. 1	08/01/17
2	100% CD	07/10/17

Copyright © 2017 Desman, Inc. All rights reserved. No Part of these documents may be reproduced in any form or by any means without written permission from DESMAN, Inc.

DRAWING TITLE:
ELEVATION DETAILS

DRAWING NO:
A205

SCALE: As indicated
DATE: 09/06/2017
PROJECT NO: 20-16105.01-1

DES.	DRWN.	CHK'D.
JWA	HDA	KW

PATCH AND REPAIR RELIEFS AS NECESSARY. REMOVE EXISTING PAINT AND REFINISH.
3D SCANS TO BE TAKEN OF ALL ORIGINALS FOR FUTURE USE.
(IMAGES PROVIDED HERE ARE NOT REPRESENTATIVE OF THE CONDITION OF THE PANELS)

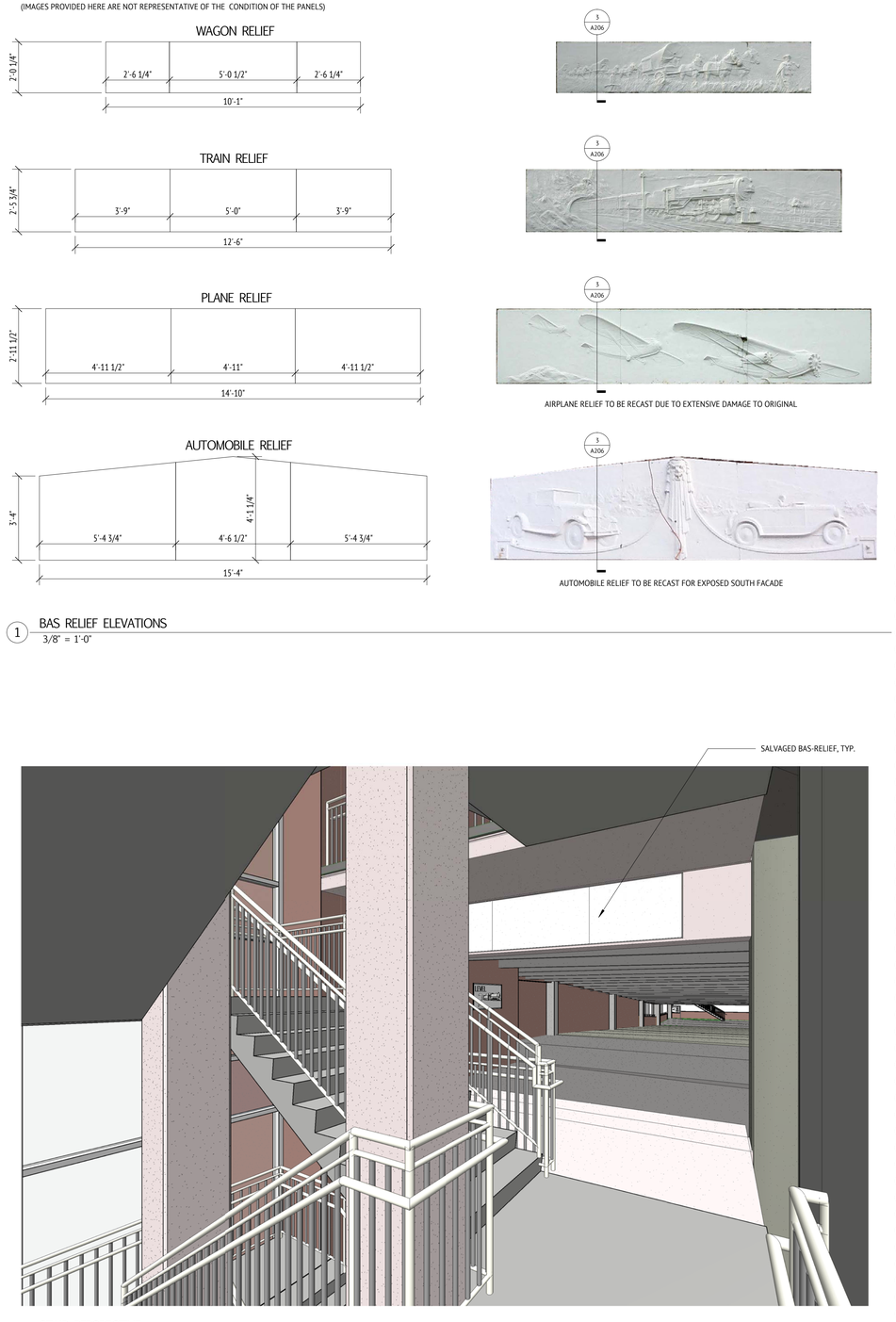

1 BAS RELIEF ELEVATIONS
3/8" = 1'-0"

2 STAIR PERSPECTIVE

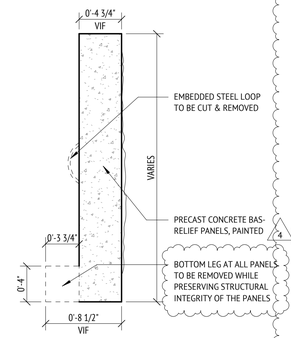

3 SALVAGED BAS-RELIEF SECTION
1 1/2" = 1'-0"

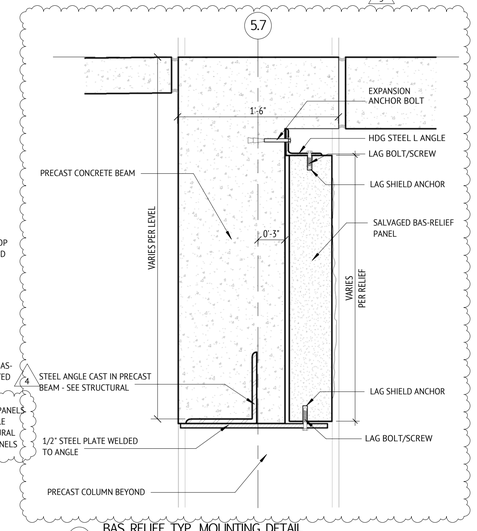

4 BAS RELIEF TYP. MOUNTING DETAIL
1 1/2" = 1'-0"

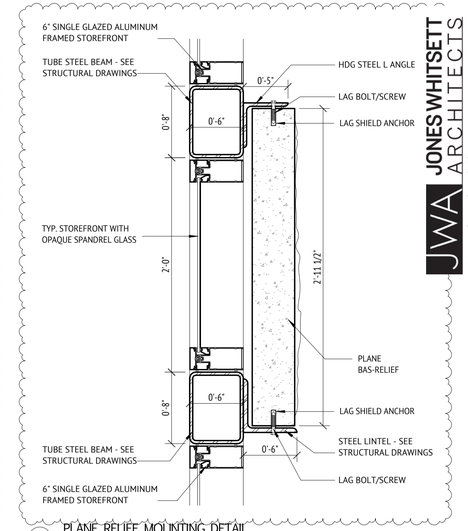

5 PLANE RELIEF MOUNTING DETAIL
1 1/2" = 1'-0"

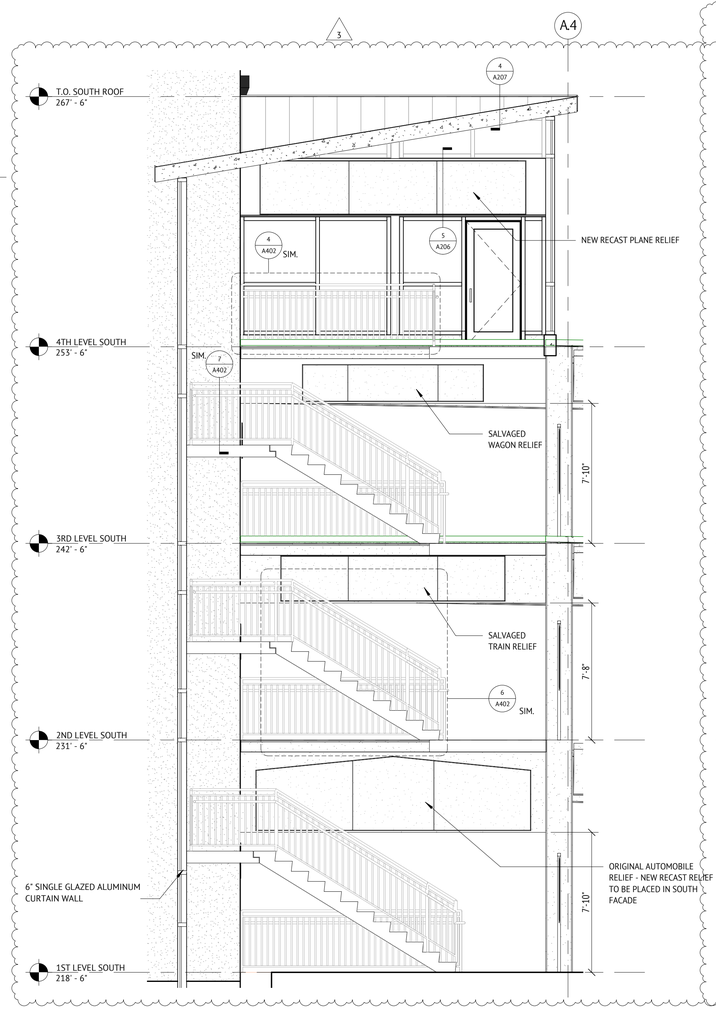

6 SOUTH STAIR SECTION
1/4" = 1'-0"

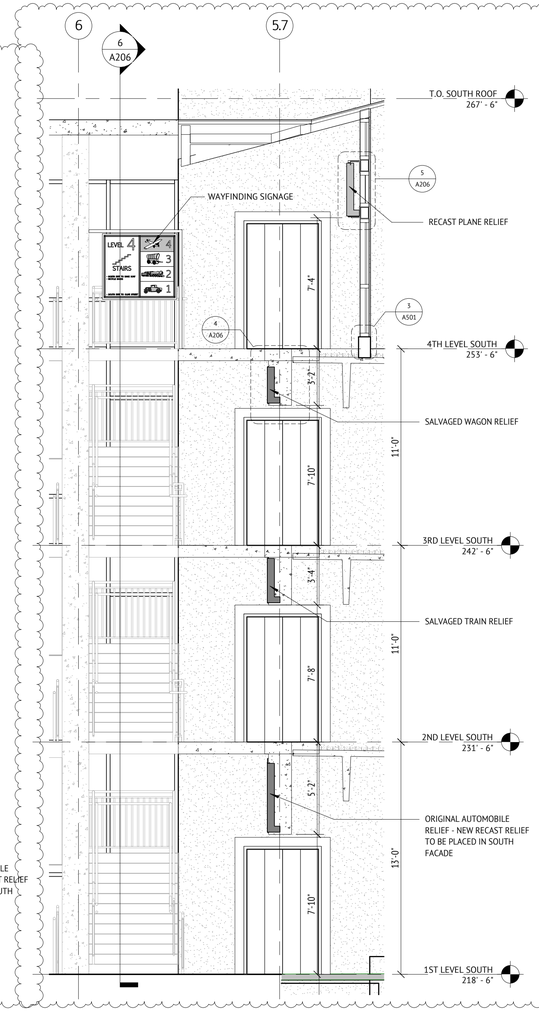

7 SOUTH STAIR SECTION - BAS RELIEF LOCATIONS
1/4" = 1'-0"

JWA JONES WHITSETT ARCHITECTS
308 Main Street, Greenfield, MA 01301 T: 413.773.5551

DESMAN Design Management

Olive Street Parking Facility

Olive Street
Greenfield, MA

CONSTRUCTION DOCUMENTS - BID SET

ISSUE

NO.	DESCRIPTION	DATE
-4	Permit Set	08/23/17
-3	100% CD- MOD. 1	08/01/17

Copyright © 2017 Desman, Inc. All rights reserved. No Part of these documents may be reproduced in any form or by any means without written permission from DESMAN, Inc.

DRAWING TITLE:
BAS-RELIEF DETAILS

DRAWING NO:
A206

SCALE: As indicated
DATE: 09/06/2017
PROJECT NO: 20-16105.01-1

DES.	DRWN.	CHK'D.
JWA	HDA	KW

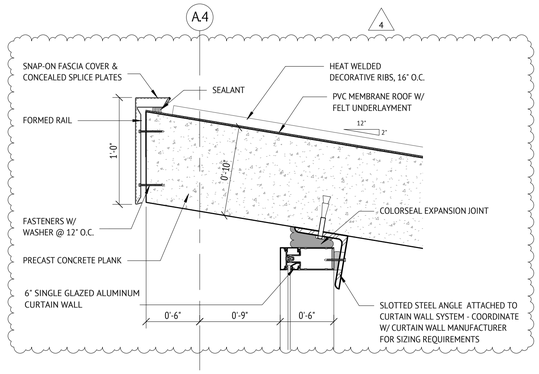

1 S. STAIR ROOF UPPER EAVE DETAIL
1 1/2" = 1'-0"

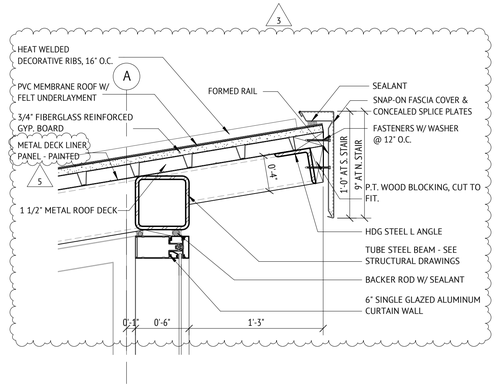

5 TYP. ROOF UPPER EAVE DETAIL
1 1/2" = 1'-0"

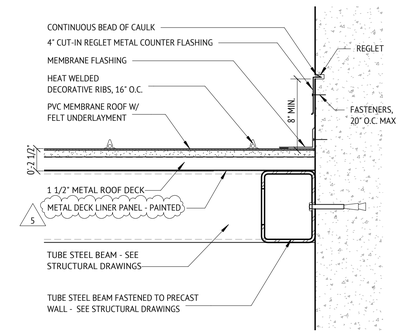

9 S. STAIR ROOF-WALL DETAIL
1 1/2" = 1'-0"

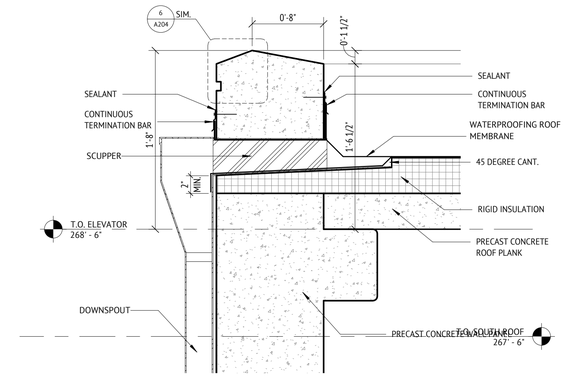

12 ELEVATOR ROOF DETAIL
1 1/2" = 1'-0"

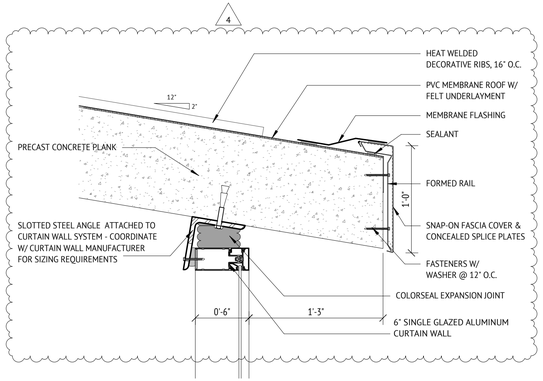

2 S. STAIR ROOF LOWER EAVE DETAIL
1 1/2" = 1'-0"

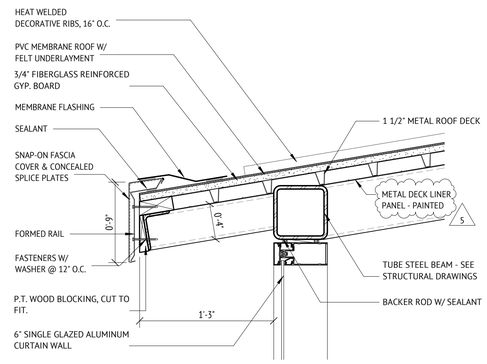

6 TYP. ROOF LOWER EAVE DETAIL
1 1/2" = 1'-0"

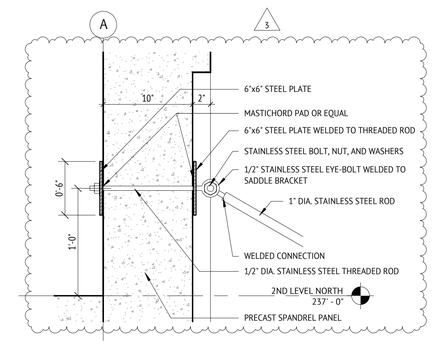

10 CANOPY SPANDREL CONNECTION DETAIL
1 1/2" = 1'-0"

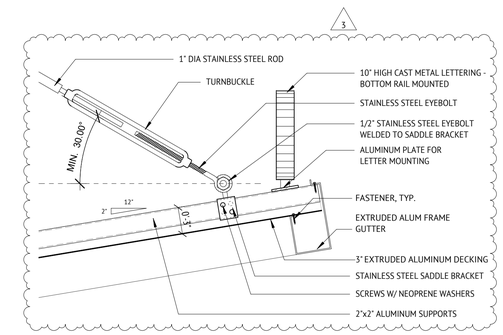

13 CANOPY EAVE DETAIL
1 1/2" = 1'-0"

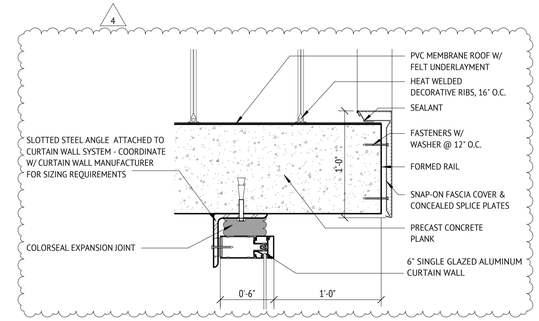

3 S. STAIR ROOF RAKE DETAIL
1 1/2" = 1'-0"

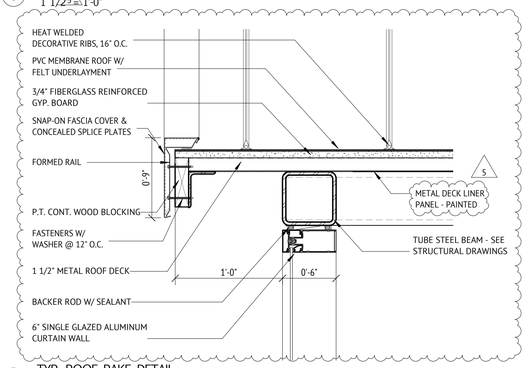

7 TYP. ROOF RAKE DETAIL
1 1/2" = 1'-0"

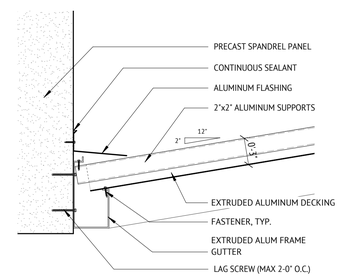

11 CANOPY VALLEY DETAIL
1 1/2" = 1'-0"

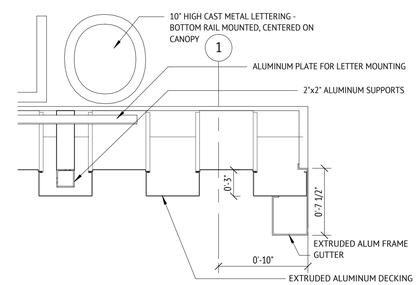

14 CANOPY RAKE DETAIL
1 1/2" = 1'-0"

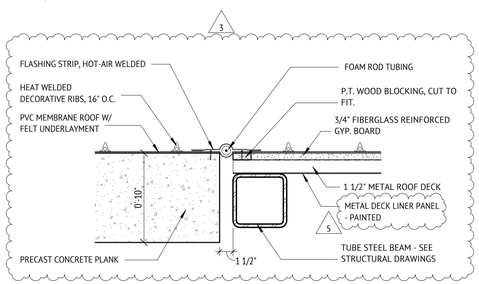

4 S. STAIR ROOF EXPANSION JOINT DETAIL
1 1/2" = 1'-0"

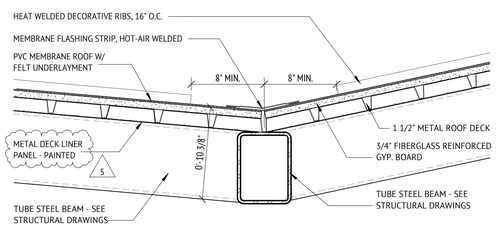

8 S. STAIR ROOF VALLEY DETAIL
1 1/2" = 1'-0"

5

GENERAL NOTES:

1) ALL ALUMINUM TO HAVE BRUSHED ANODIZED FINISH

JWA JONES WHITSETT ARCHITECTS
308 Main Street, Greenfield, MA 01301 T. 413.773.5551

DESMAN Design Management

Olive Street Parking Facility

Olive Street
Greenfield, MA

CONSTRUCTION DOCUMENTS - BID SET

ISSUE

NO.	DESCRIPTION	DATE
5	CD - Bid Set	09/06/17
4	Permit Set	08/23/17
3	100% CD- MOD. 1	08/01/17

Copyright © 2017 Desman, Inc. All rights reserved. No Part of these documents may be reproduced in any form or by any means without written permission from DESMAN, Inc.

DRAWING TITLE:
ROOF & CANOPY DETAILS

DRAWING NO:
A207

SCALE: 1 1/2" = 1'-0"
DATE: 09/06/2017
PROJECT NO: 20-16105.01-1

DES.	DRWN.	CHK'D.
JWA	HDA	KW

SIGNAGE SCHEDULE					
Name	SYMBOL	COLOR	TYPE "A"	TYPE "B"	TYPE "C"
LEVEL 1	AUTOMOBILE	BLUE	2	1	1
LEVEL 2	PLANE	GREEN	3	1	1
LEVEL 3	TRAIN	ORANGE	3	1	1
LEVEL 4	WAGON	RED	3	1	1
			11	4	4

TYPE "A": TYPICAL LEVEL SIGNAGE THROUGHOUT GARAGE
- ALUMINUM W/ THERMOSET COATING, SCREEN PRINTED
- WALL MOUNTED OR MOUNTED TO DOUBLE TEES

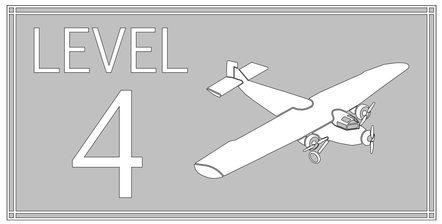

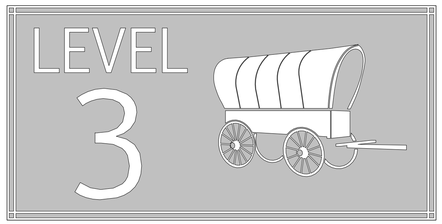

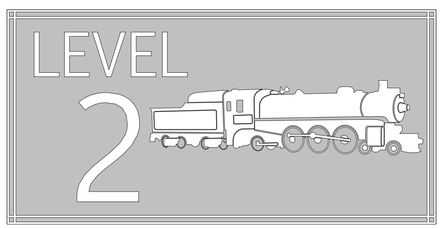

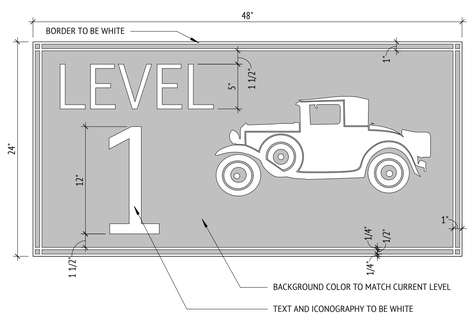

1 SIGNAGE ELEVATIONS
1 1/2" = 1'-0"

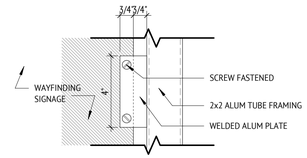

2 WAYFINDING SIGNAGE MOUNTING DETAIL
3" = 1'-0"

TYPE "B", GARAGE SIDE: WAYFINDING SIGNAGE AT SOUTH STAIR, DOUBLE SIDED
-ALUMINUM W/ THERMOSET COATING, SCREEN PRINTED
-2" ALUMINUM TUBE FRAMING SUPPORT

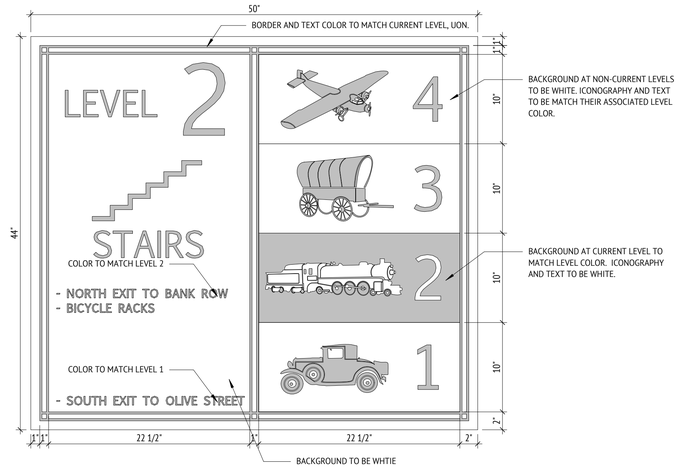

TYPE "B", STAIR SIDE:
WAYFINDING SIGNAGE AT SOUTH STAIR, DOUBLE SIDED

THE STAIR SIDE OF THE WAYFINDING SIGNAGE AT THE SOUTH STAIR SHALL BE DESIGNED BY THE TOWN IN CONIUCTION WITH THE ARCHITECT. IT SHALL FEATURE HISTORIC IMAGES OF THE MODE OF TRANSPORTATION ASSOCIATED WITH THE LEVEL AS WELL AS A SHORT NARRATIVE ABOUT THE MODE OF TRANSPORTATIION AND ANY HISTORIC RELATIONSHIP TO GREENFIELD.

TYPE "C": WAYFINDING SIGNAGE AT NORTH STAIR
-ALUMINUM W/ THERMOSET COATING, SCREEN PRINTED
-2" ALUMINUM TUBE FRAMING SUPPORT

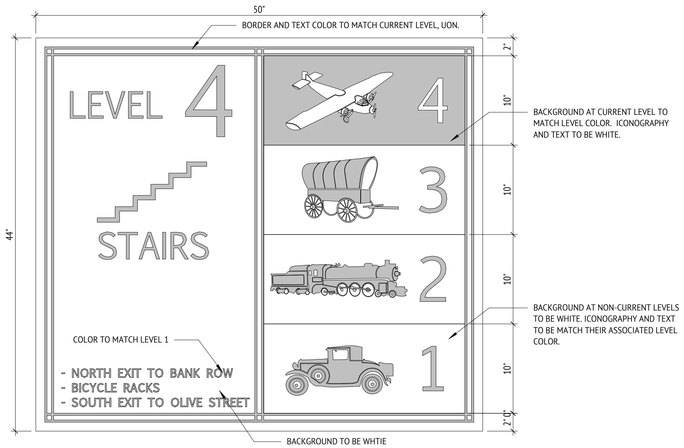

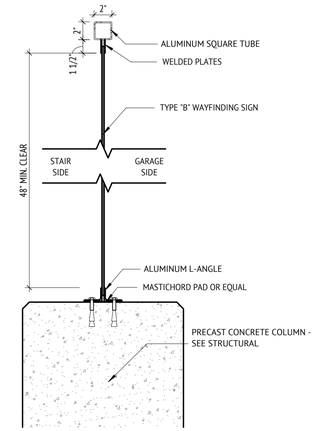

3 WAYFINDING SIGNAGE DETAIL
1 1/2" = 1'-0"

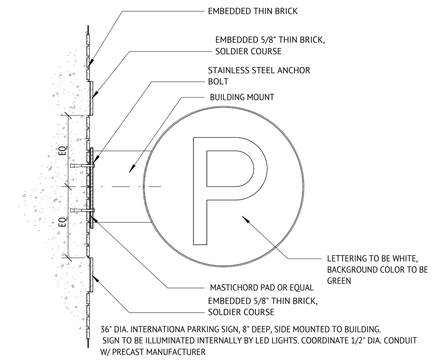

4 INTERNATIONAL PARKING SIGNAGE
3/4" = 1'-0"

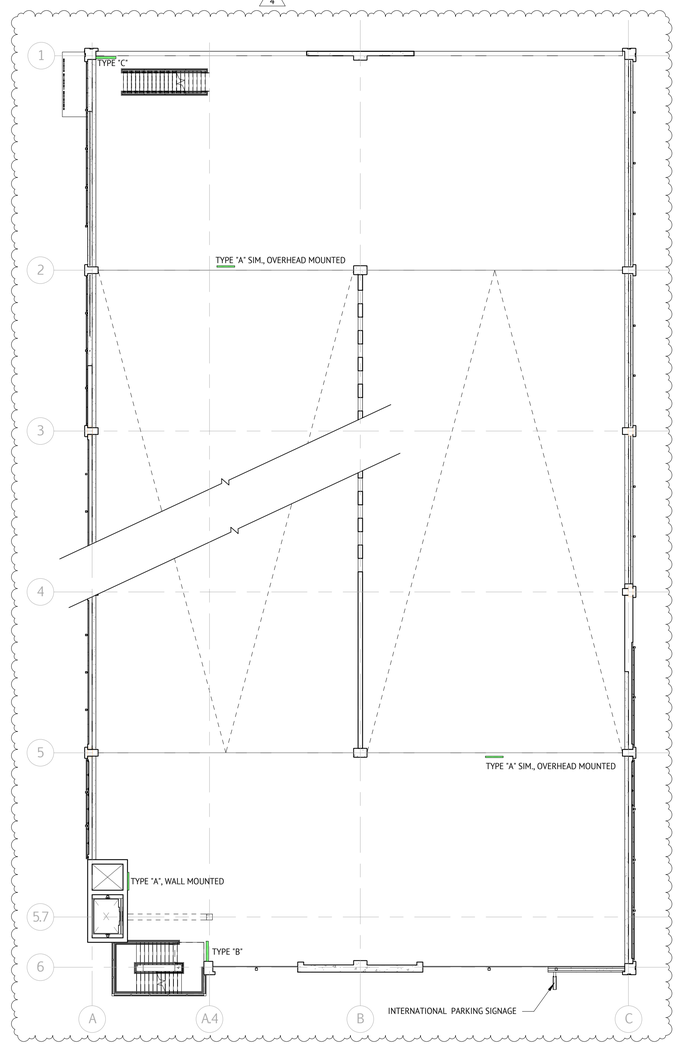

5 SIGNAGE LOCATIONS ON TYP. LEVEL
1/16" = 1'-0"

JWA JONES WHITSETT ARCHITECTS
308 Main Street, Greenfield, MA 01301 T: 413.773.5551

DESMAN Design Management

Olive Street Parking Facility

Olive Street
Greenfield, MA

CONSTRUCTION DOCUMENTS - BID SET

ISSUE

NO.	DESCRIPTION	DATE
4	Permit Set	08/23/17

Copyright © 2017 Desman, Inc. All rights reserved. No Part of these documents may be reproduced in any form or by any means without written permission from DESMAN, Inc.

DRAWING TITLE:
SIGNAGE DETAILS

DRAWING NO:
A208

SCALE: As indicated
DATE: 09/06/2017
PROJECT NO: 20-16105.01-1

DES.	DRWN.	CHK'D.
JWA	HDA	KW

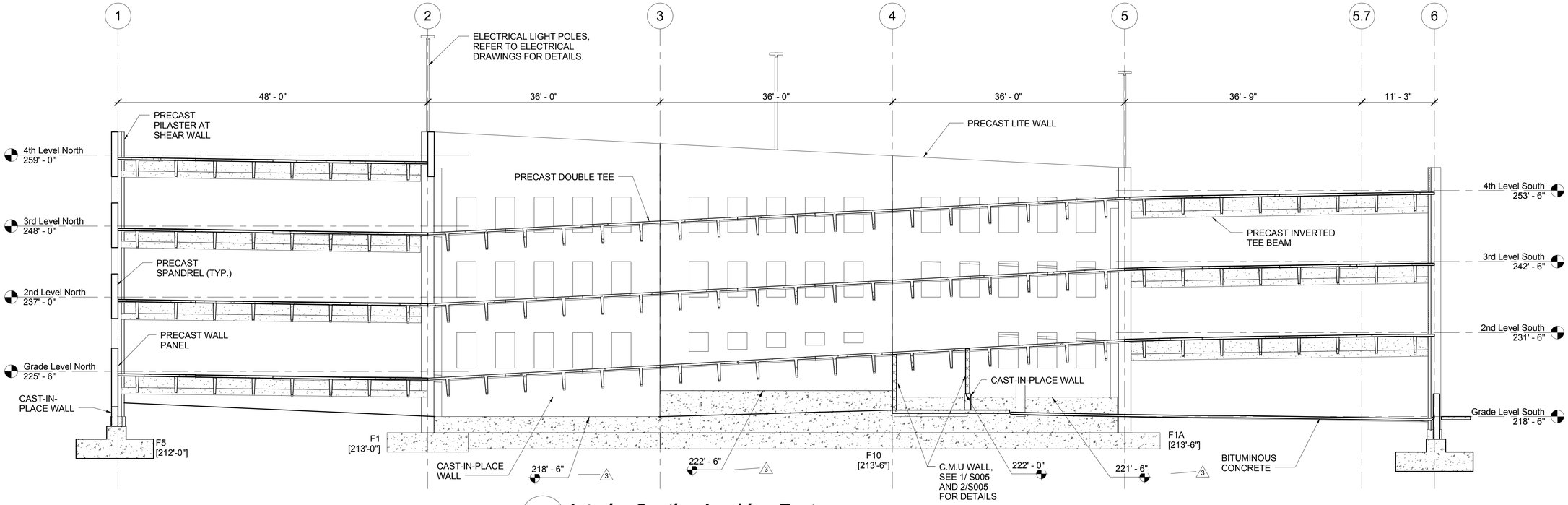

1 A301 **Interior Section Looking East**
1/8" = 1'-0"

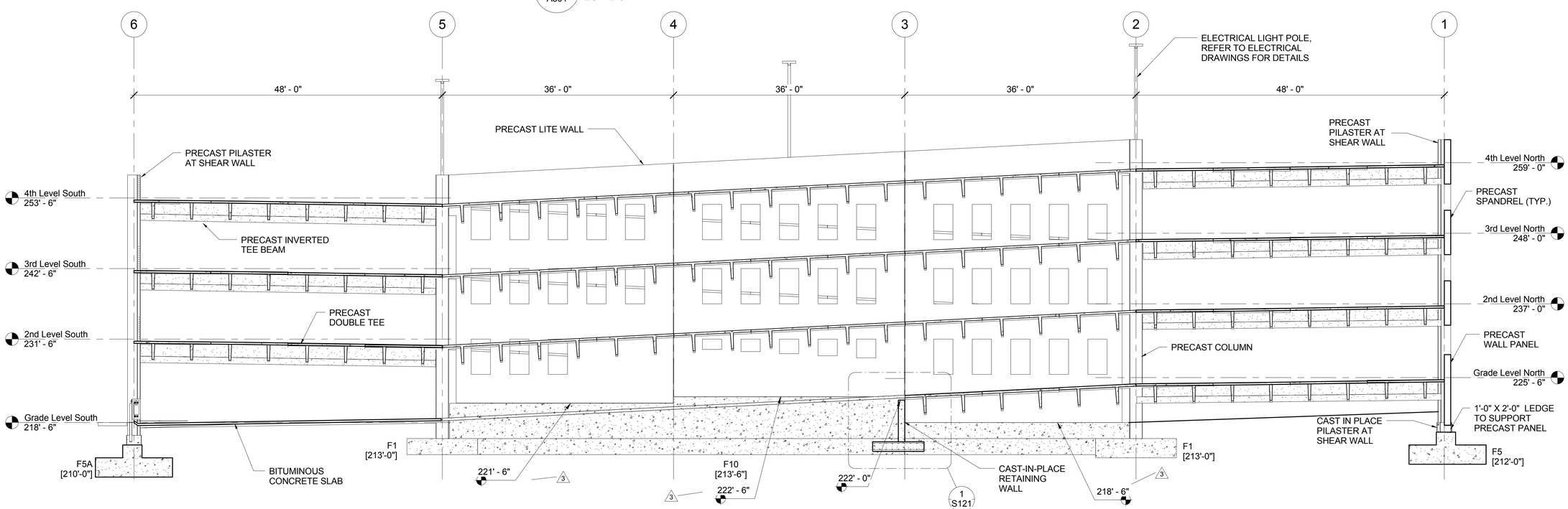

2 A301 **Interior Section Looking West**
1/8" = 1'-0"

DESMAN Design Management

Olive Street Parking Facility

Olive Street
Greenfield, MA

CONSTRUCTION DOCUMENTS - BID SET

ISSUE

NO.	DESCRIPTION	DATE
3	100% CD- MOD. 1	08/01/17

Copyright © 2017 DESMAN, Inc. All rights reserved. No part of these documents may be reproduced in any form or by any means without written permission from DESMAN, Inc.

DRAWING TITLE:
INTERIOR SECTIONS

DRAWING NO:
A301

SCALE: 1/8" = 1'-0"
DATE: 09/06/2017
PROJECT NO: 20-16105.01-1

DES.	DRWN.	CHK'D.
WJW	ALL	WTF

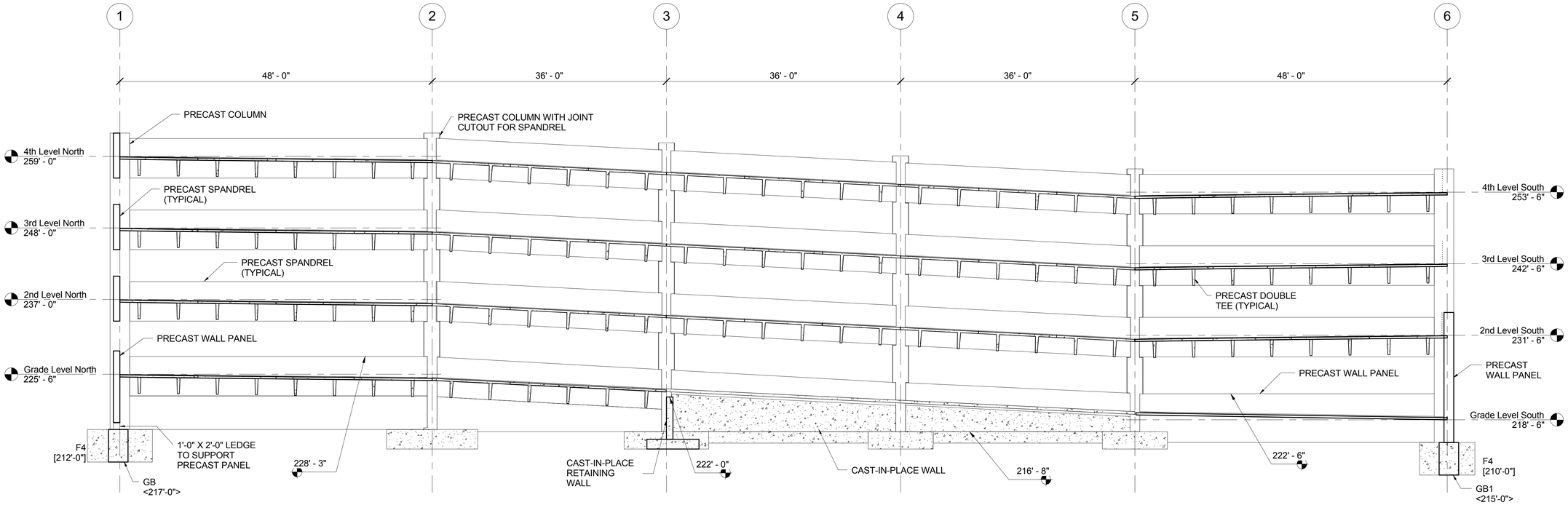

1 / A302 **Exterior Section Looking East**
1/8" = 1'-0"

DESMAN Design Management

Olive Street Parking Facility

Olive Street
Greenfield, MA

CONSTRUCTION DOCUMENTS - BID SET

ISSUE

NO.	DESCRIPTION	DATE

Copyright © 2017 DESMAN, Inc. All rights reserved. No part of these documents may be reproduced in any form or by any means without written permission from DESMAN, Inc.

DRAWING TITLE:
EXTERIOR SECTIONS

DRAWING NO:
A302

SCALE: 1/8" = 1'-0"
DATE: 09/06/2017
PROJECT NO: 20-16105.01-1

DES.	DRWN.	CHK'D.
WTF	ALL	WJW

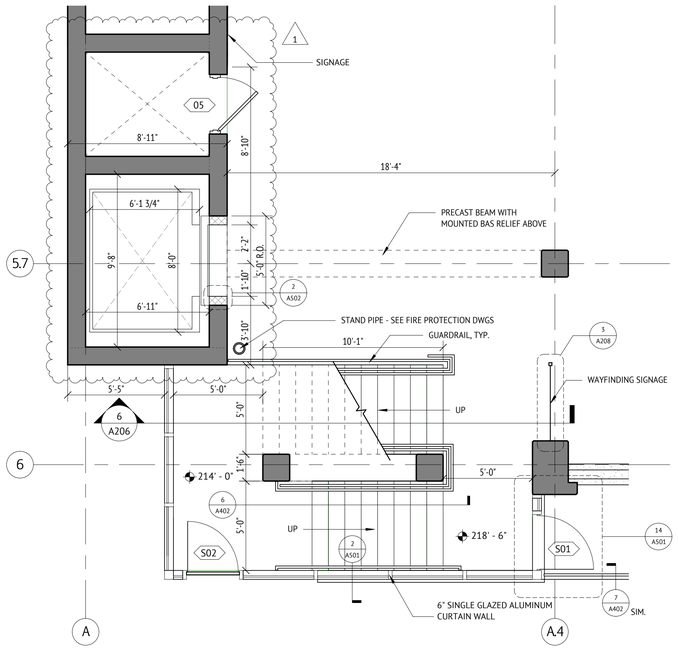

1 SOUTH STAIR, LEVEL 1
1/4" = 1'-0"

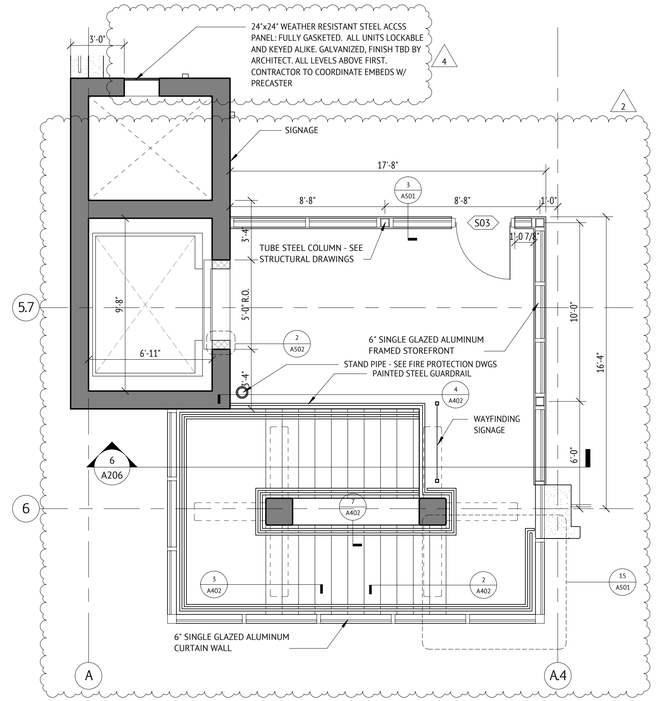

3 SOUTH STAIR, LEVEL 4
1/4" = 1'-0"

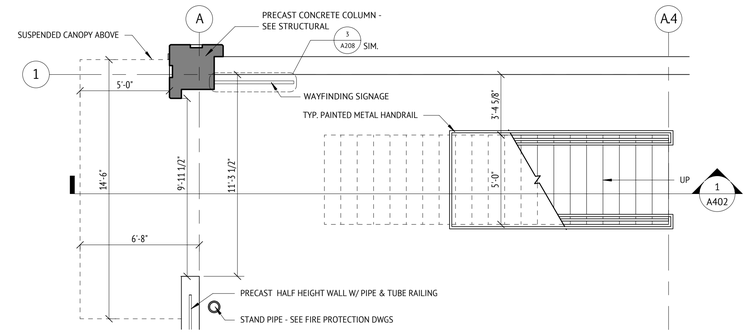

5 NORTH STAIR, LEVEL 1
1/4" = 1'-0"

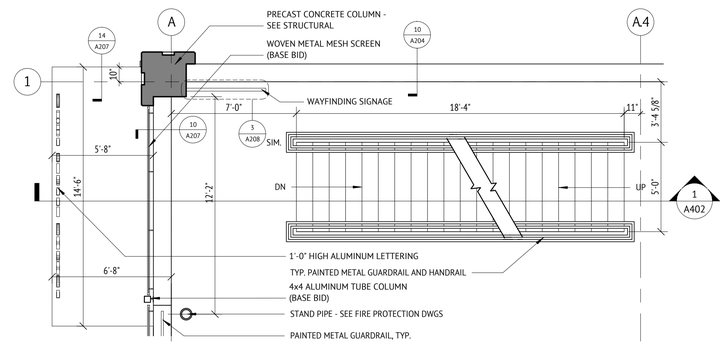

6 NORTH STAIR, LEVELS 2 & 3
1/4" = 1'-0"

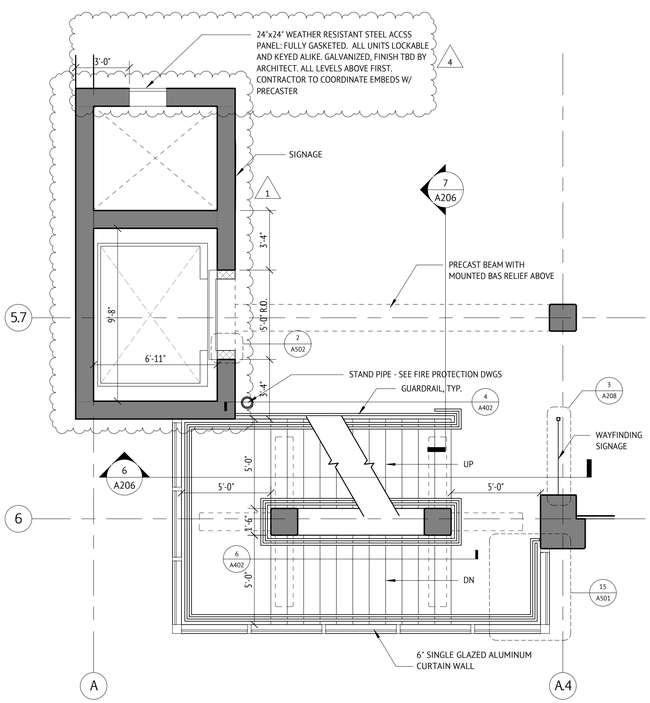

2 SOUTH STAIR, LEVELS 2 & 3
1/4" = 1'-0"

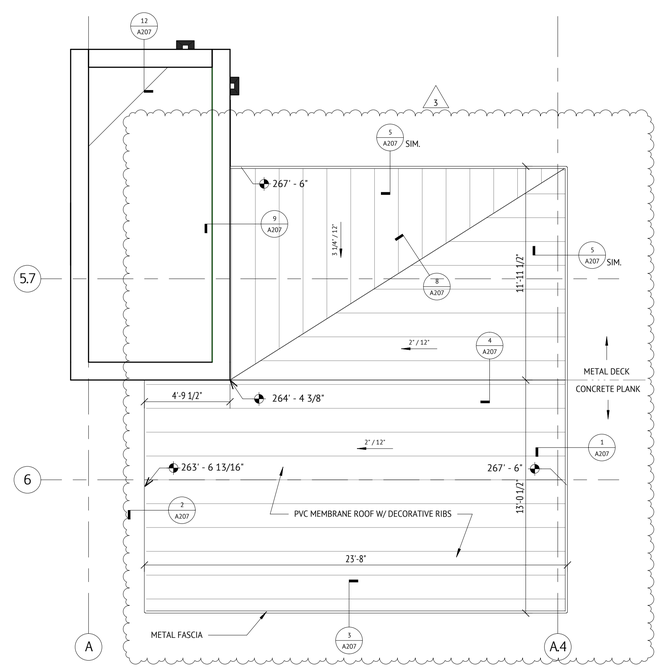

4 SOUTH STAIR, ROOF PLAN
1/4" = 1'-0"

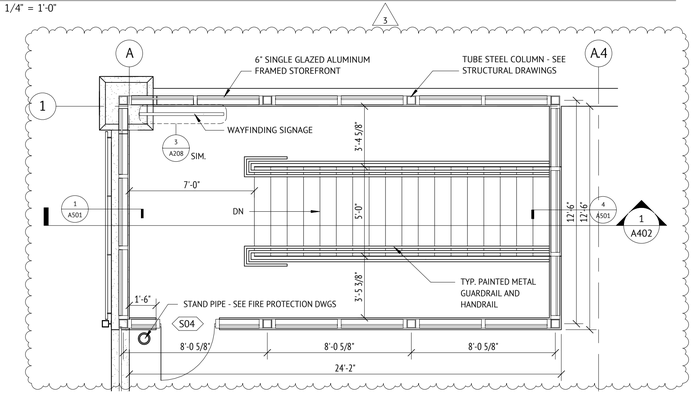

7 NORTH STAIR, LEVEL 4
1/4" = 1'-0"

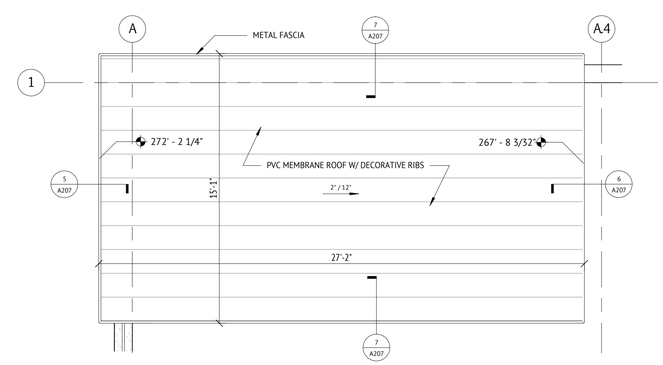

8 NORTH STAIR, ROOF PLAN
1/4" = 1'-0"

JWA JONES WHITSETT ARCHITECTS
308 Main Street, Greenfield, MA 01301 T: 413.773.5551

DESMAN Design Management

Olive Street Parking Facility

Olive Street
Greenfield, MA

CONSTRUCTION DOCUMENTS - BID SET

ISSUE

NO.	DESCRIPTION	DATE
4	Permit Set	08/23/17
3	100% CD- MOD. 1	08/01/17
2	100% CD	07/10/17
1	Addendum 1	06/02/17

Copyright © 2017 Desman, Inc. All rights reserved. No Part of these documents may be reproduced in any form or by any means without written permission from DESMAN, Inc.

DRAWING TITLE:
ENLARGED STAIR PLANS

DRAWING NO:
A401

SCALE: 1/4" = 1'-0"
DATE: 09/06/2017
PROJECT NO: 20-16105.01-1

DES.	DRWN.	CHK'D.
JWA	HDA	KW

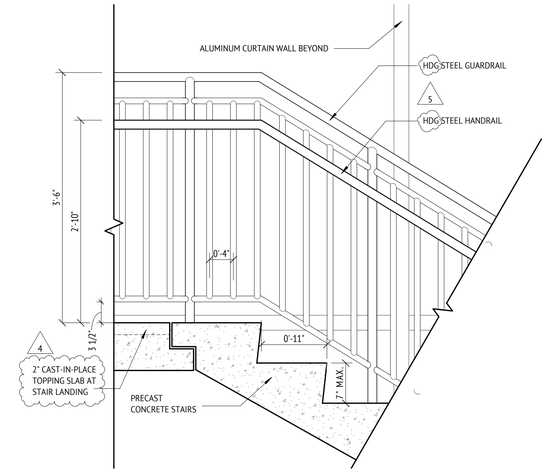

2 TYP. RAILING DETAIL @ TOP OF RUN
1" = 1'-0"

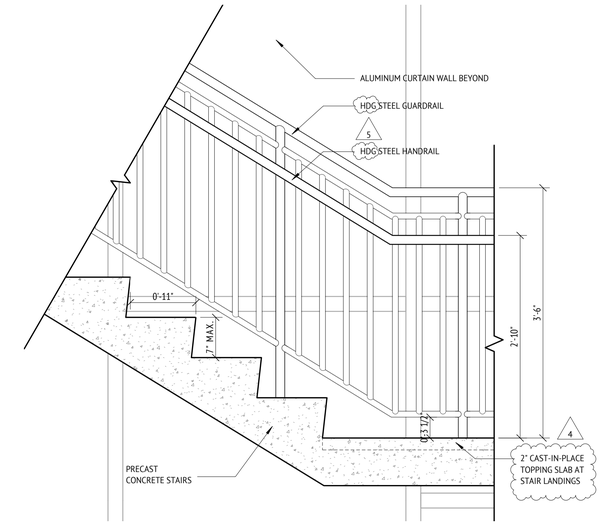

3 TYP. RAILING DETAIL @ BOTTOM OF RUN
1" = 1'-0"

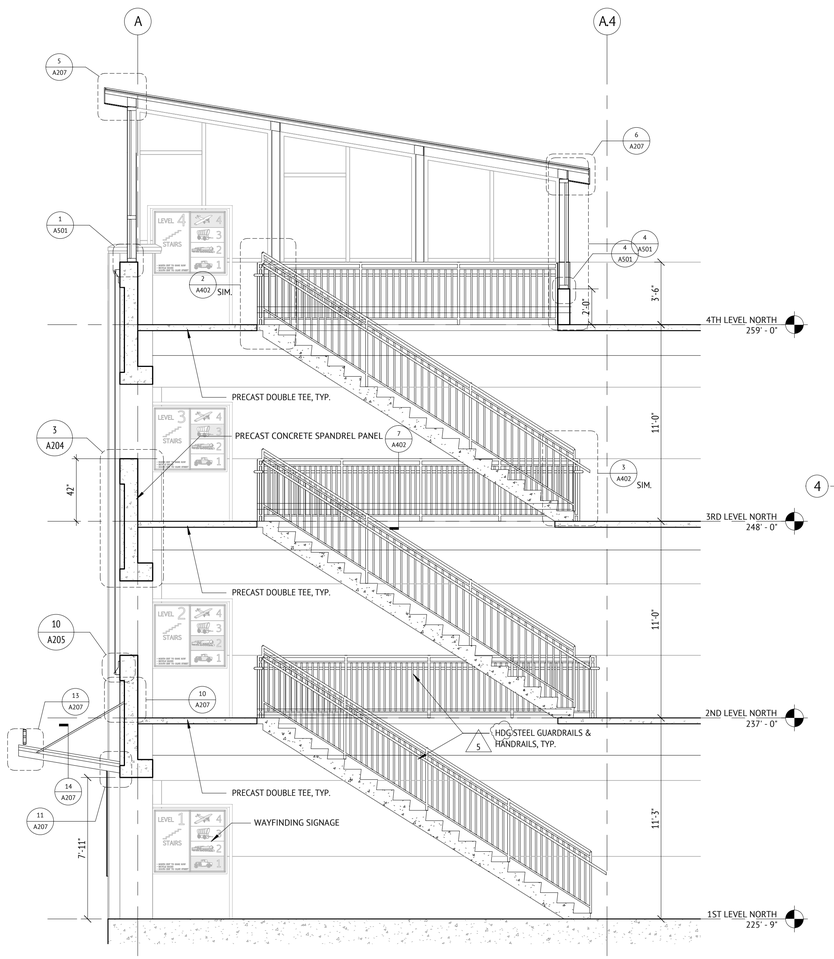

1 N. STAIR SECTION
1/4" = 1'-0"

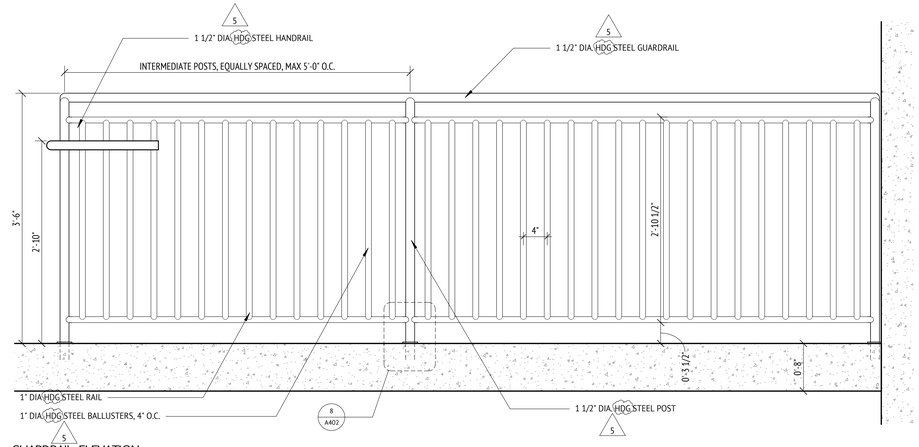

4 GUARDRAIL ELEVATION
1" = 1'-0"

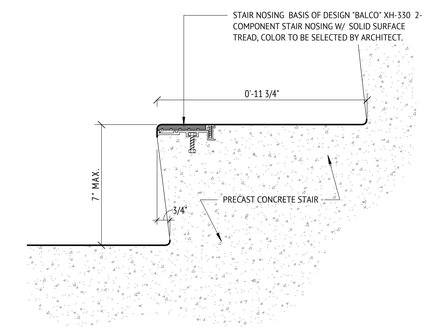

5 TYP. STAIR NOSING DETAIL
3" = 1'-0"

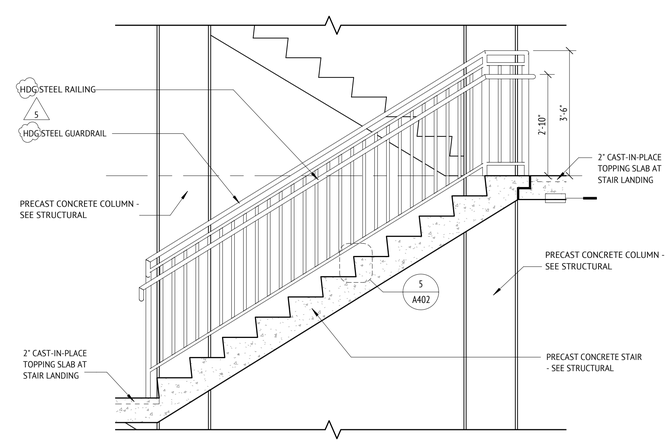

6 STAIR RUN ELEVATION, TYP.
1/2" = 1'-0"

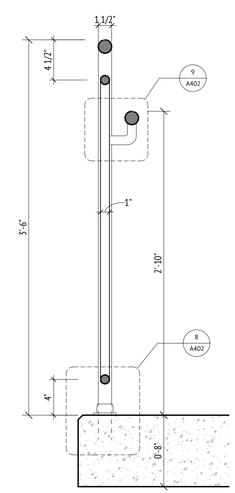

7 TYP. RAILING DETAIL
1 1/2" = 1'-0"

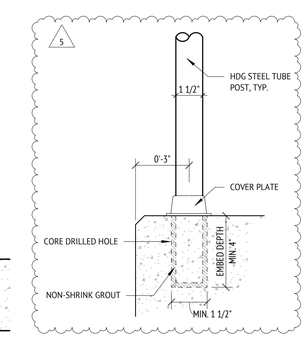

8 TYP. POST CONNECTION DETAIL
3" = 1'-0"

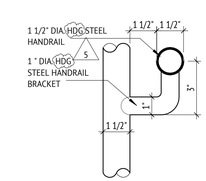

9 TYP. HANDRAIL DETAIL
3" = 1'-0"

JWA JONES WHITSETT ARCHITECTS
308 Main Street, Greenfield, MA 01301 T: 413.773.5551

DESMAN Design Management

Olive Street Parking Facility

Olive Street
Greenfield, MA

CONSTRUCTION DOCUMENTS - BID SET

ISSUE

NO.	DESCRIPTION	DATE
5	CD - Bid Set	09/06/17
4	Permit Set	08/23/17

Copyright © 2017 Desman, Inc. All rights reserved. No Part of these documents may be reproduced in any form or by any means without written permission from DESMAN, Inc.

DRAWING TITLE:
STAIR DETAILS

DRAWING NO:
A402

SCALE: As indicated
DATE: 09/06/2017
PROJECT NO: 20-16105.01-1

DES.	DRWN.	CHK'D.
JWA	HDA	KW

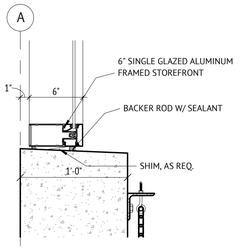

1 STOREFRONT SILL DETAIL
1 1/2" = 1'-0"

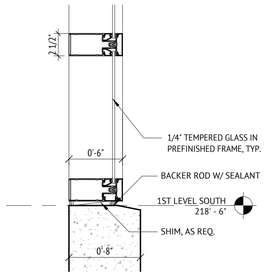

2 CURTAIN WALL SILL DETAIL
1 1/2" = 1'-0"

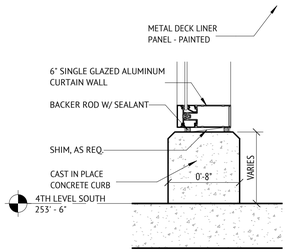

3 S. STAIR ROOF CURB DETAIL
1 1/2" = 1'-0"

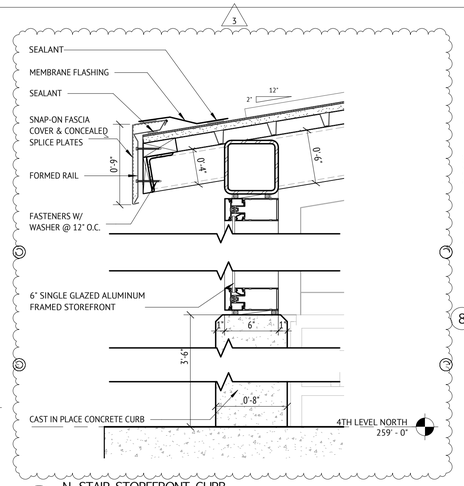

4 N. STAIR STOREFRONT CURB
1 1/2" = 1'-0"

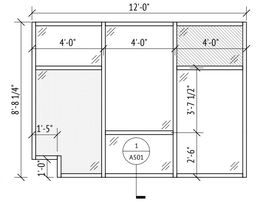

8 N. STAIR STOREFRONT, WEST ELEVATION
1/4" = 1'-0"

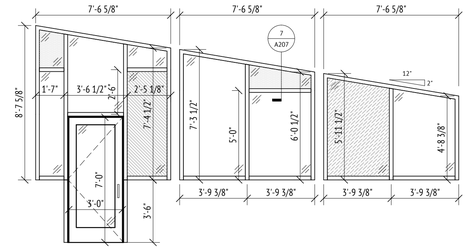

9 N. STAIR STOREFRONT, SOUTH ELEVATION
1/4" = 1'-0"

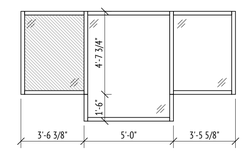

10 N. STAIR STOREFRONT, EAST ELEVATION
1/4" = 1'-0"

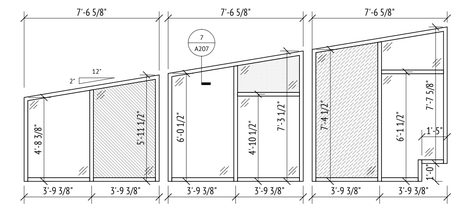

11 N. STAIR STOREFRONT, NORTH ELEVATION
1/4" = 1'-0"

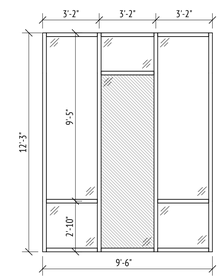

12 S. STAIR STOREFRONT, EAST ELEVATION
1/4" = 1'-0"

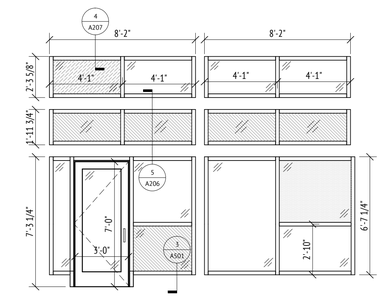

13 S. STAIR STOREFRONT, NORTH ELEVATION
1/4" = 1'-0"

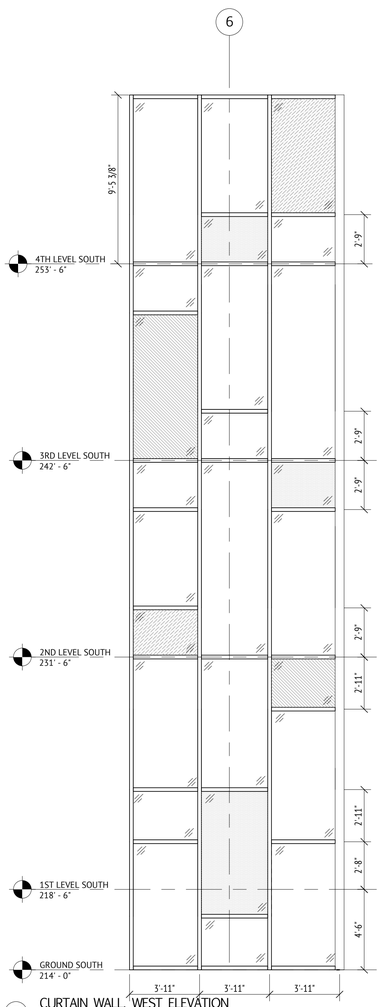

5 CURTAIN WALL, WEST ELEVATION
1/4" = 1'-0"

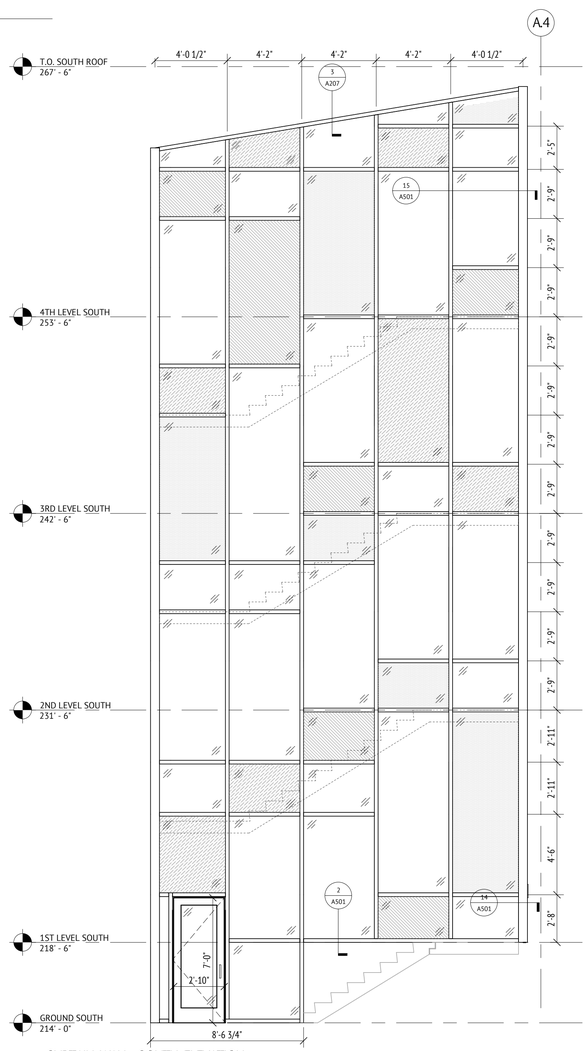

6 CURTAIN WALL, SOUTH ELEVATION
1/4" = 1'-0"

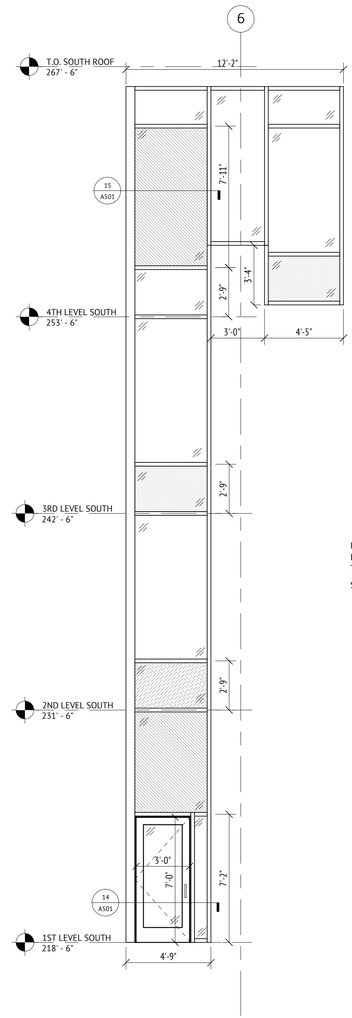

7 CURTAIN WALL, EAST ELEVATION
1/4" = 1'-0"

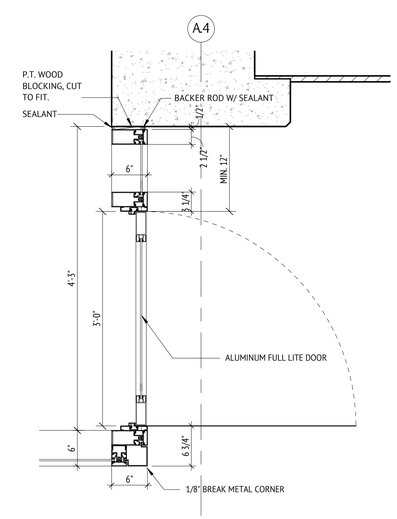

14 CURTAIN WALL DOOR PLAN DETAIL
1" = 1'-0"

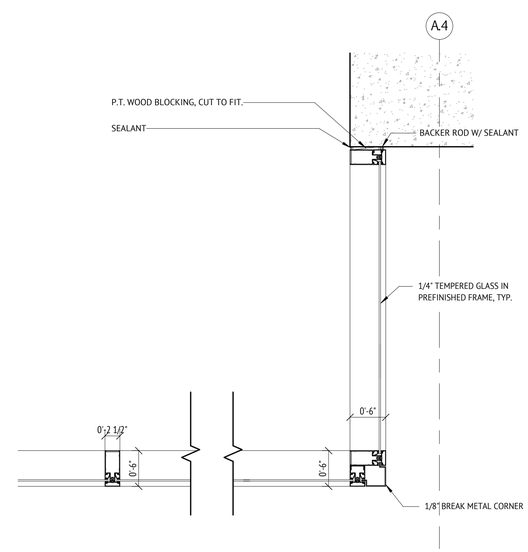

15 CURTAIN WALL PLAN DETAIL
1" = 1'-0"

GLAZING COLOR "A" GLAZING COLOR "B" GLAZING COLOR "C"

Glazing Legend
1/4" = 1'-0"

JWA JONES WHITSETT ARCHITECTS
308 Main Street, Greenfield, MA 01301 T. 413.773.5551

DESMAN Design Management

Olive Street Parking Facility

Olive Street
Greenfield, MA

CONSTRUCTION DOCUMENTS - BID SET

ISSUE

NO.	DESCRIPTION	DATE
3	100% CD- MOD. 1	08/01/17

Copyright © 2017 Desman, Inc. All rights reserved. No Part of these documents may be reproduced in any form or by any means without written permission from DESMAN, Inc.

DRAWING TITLE:
CURTAIN WALL & STOREFRONT DETAILS

DRAWING NO:
A501

SCALE: As indicated
DATE: 09/06/2017
PROJECT NO: 20-16105.01-1

DES.	DRWN.	CHK'D.
JWA	HDA	KW

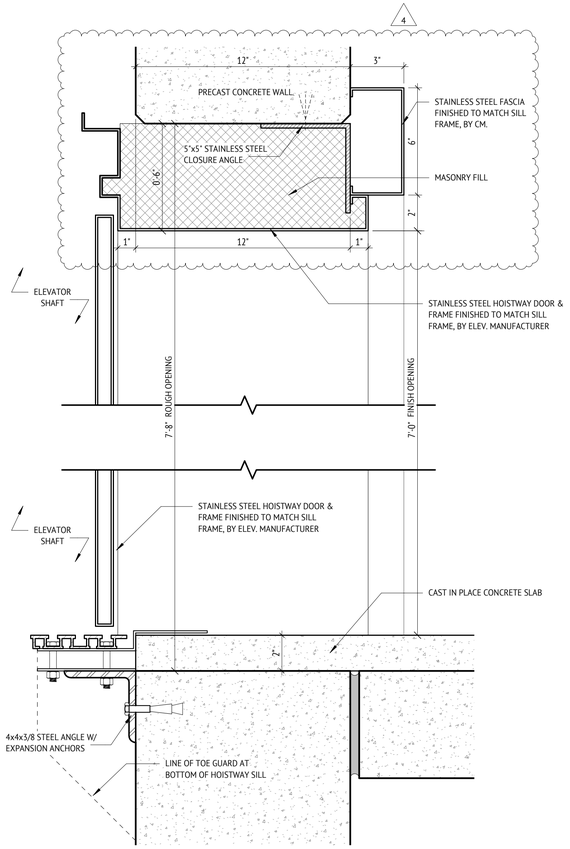

1 ELEVATOR HEAD & SILL DETAIL
3" = 1'-0"

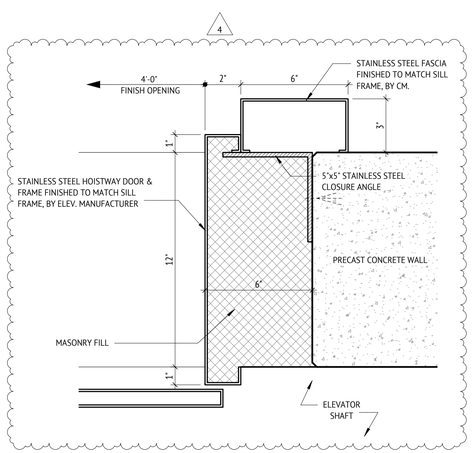

2 ELEVATOR JAMB DETAIL
3" = 1'-0"

NOTE:

- ELEVATOR DOOR DETAILS TYP. AT ALL LEVELS.
- ELEVATOR DOORS NOT SHOWN IN SCHEDULE

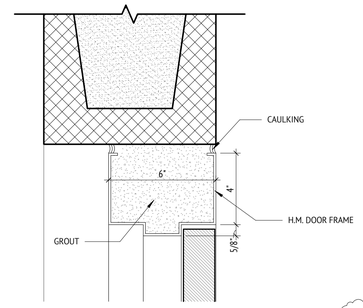

3 FRAME HEAD DETAIL
3" = 1'-0"

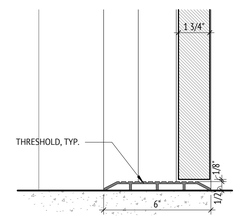

4 FRAME SILL DETAIL
3" = 1'-0"

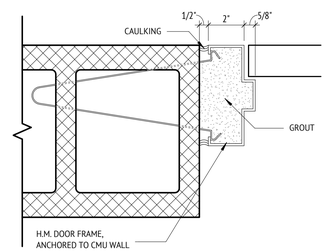

5 FRAME JAMB DETAIL @ CMU WALL
3" = 1'-0"

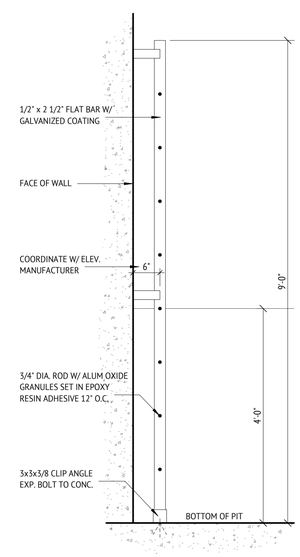

6 ELEV PIT LADDER DETAIL
3/4" = 1'-0"

2

DOOR SCHEDULE

DOOR TAG	FROM:	TO:	DOOR TYPE	DOOR MAT	DOOR LEAF WIDTH	DOOR HEIGHT	DOOR THICKNESS	FRAME TYPE	FRAME MAT	DETAILS HEAD	DETAILS JAMB	DETAILS SILL	COMMENTS
01	STORAGE ROOM	GARAGE LVL 1	C	MTL	2' - 10"	7' - 0"	0' - 1 3/4"	2	HM	3/A502	5/A502	4/A502	DOUBLE DOOR
01A		STORAGE ROOM	C	MTL	2' - 10"	7' - 0"	0' - 1 3/4"	2	HM	3/A502	5/A502	4/A502	DOUBLE DOOR
02	UTILITY ROOM	GARAGE LVL 1	B	MTL	3' - 0"	7' - 0"	0' - 1 3/4"	1	HM	3/A502	5/A502	4/A502	
03	ELECTRICAL ROOM	GARAGE LVL 1	C	MTL	2' - 10"	7' - 0"	0' - 1 3/4"	2	HM	3/A502	5/A502	4/A502	DOUBLE DOOR, 90 MINUTE FIRE RATING
04	ELEVATOR MACHINE ROOM	GARAGE LVL 1	B	MTL	3' - 0"	7' - 0"	0' - 1 3/4"	1	HM	3/A502	5/A502	4/A502	90 MINUTE FIRE RATING
05		GARAGE LVL 1	B	MTL	3' - 0"	7' - 0"	0' - 1 3/4"	1	HM	3/A502	5/A502	4/A502	90 MINUTE FIRE RATING
S01			A	ALUM	3' - 1 1/2"	7' - 0 3/4"	0' - 1 3/4"	CURTAIN WALL	ALUM	7/A502	14/A501	8/A502	CW & STOREFRONT DOOR DIMENSIONS INCLUDE 3/4" FRAME INSET
S02			A	ALUM	2' - 11 1/2"	7' - 0 3/4"	0' - 1 3/4"	CURTAIN WALL	ALUM	7/A502	14/A501	8/A502	CW & STOREFRONT DOOR DIMENSIONS INCLUDE 3/4" FRAME INSET
S03			A	ALUM	3' - 1 1/2"	7' - 0 3/4"	0' - 1 3/4"	STOREFRONT	ALUM	7/A502	14/A501	8/A502	CW & STOREFRONT DOOR DIMENSIONS INCLUDE 3/4" FRAME INSET
S04			A	ALUM	3' - 1 1/2"	7' - 0 3/4"	0' - 1 3/4"	STOREFRONT	ALUM	7/A502	14/A501	8/A502	CW & STOREFRONT DOOR DIMENSIONS INCLUDE 3/4" FRAME INSET

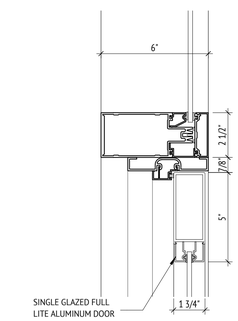

7 CURTAIN WALL DOOR HEAD DETAIL
3" = 1'-0"

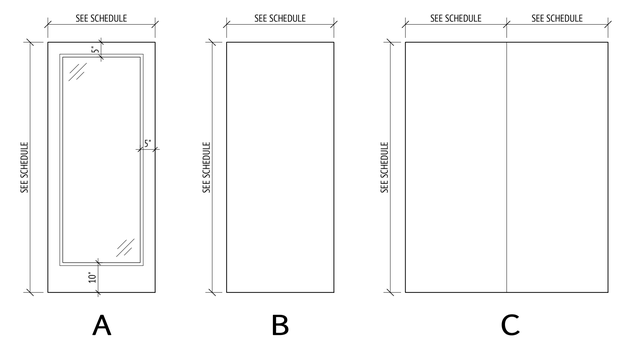

9 DOOR TYPES
1/2" = 1'-0"

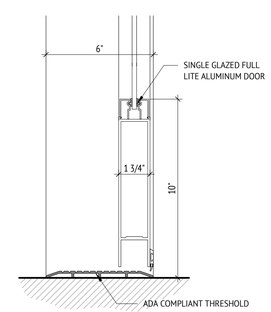

8 CURTAIN WALL DOOR THRESHOLD DETAIL
3" = 1'-0"

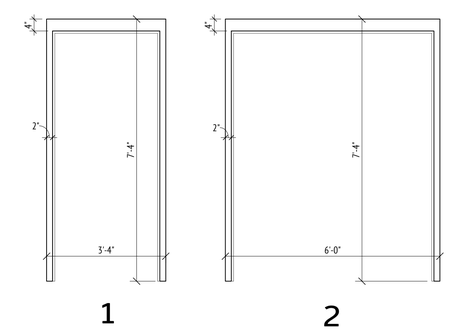

10 FRAME TYPES
1/2" = 1'-0"

JWA JONES WHITSETT ARCHITECTS
308 Main Street, Greenfield, MA 01301 T: 413.773.5551

DESMAN Design Management

Olive Street Parking Facility

Olive Street
Greenfield, MA

CONSTRUCTION DOCUMENTS - BID SET

ISSUE

NO.	DESCRIPTION	DATE
4	Permit Set	08/23/17
2	100% CD	07/10/17

Copyright © 2017 Desman, Inc. All rights reserved. No Part of these documents may be reproduced in any form or by any means without written permission from DESMAN, Inc.

DRAWING TITLE:
DOOR SCHEDULE & MISC. DETAILS

DRAWING NO:
A502

SCALE: As indicated
DATE: 09/06/2017
PROJECT NO: 20-16105.01-1

DES.	DRWN.	CHK'D.
JWA	HDA	KW

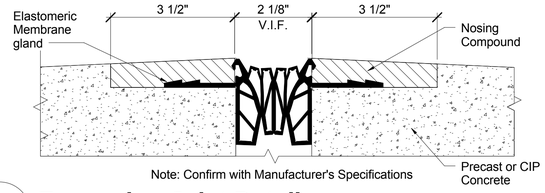

11 / A701 **Expansion Joint Detail**
6" = 1'-0"

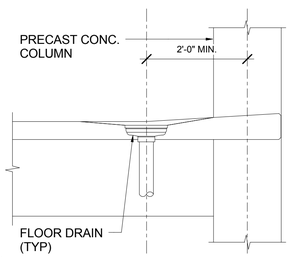

12 / A701 **DRAIN SECTION DETAIL**
3/4" = 1'-0"

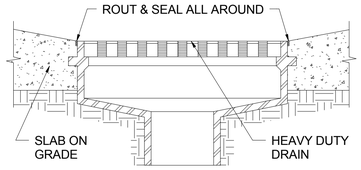

NOTE: REFER TO PLUMBING DRAWINGS FOR EXTENT OF DRAINAGE SYSTEM

13 / A701 **FLOOR DRAIN DETAIL**
3/4" = 1'-0"

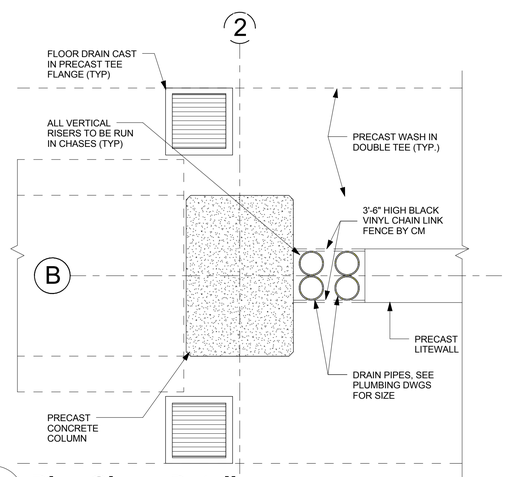

14 / A701 **Pipe Chase Detail**
3/4" = 1'-0"

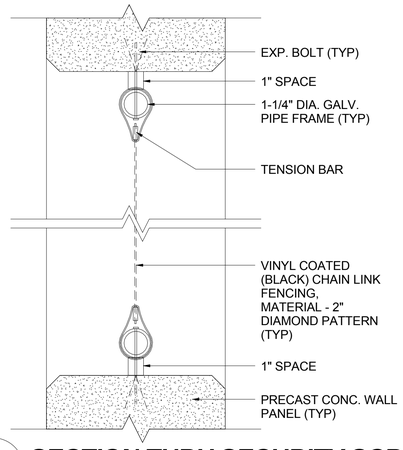

7 / A701 **SECTION THRU SECURITY SCREEN**
3" = 1'-0"

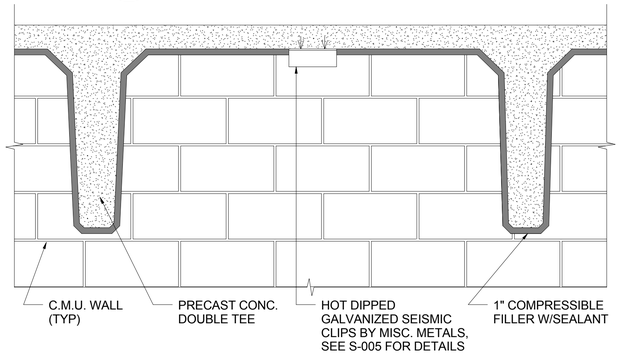

8 / A701 **C.M.U. WALL & TEE DETAIL**
1" = 1'-0"

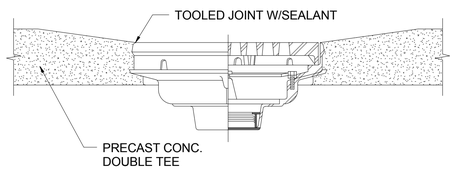

NOTE: FOR PIPE AND DRAIN SIZE SEE PLUMBING DRAWINGS

9 / A701 **DECK DRAIN DETAIL**
3/4" = 1'-0"

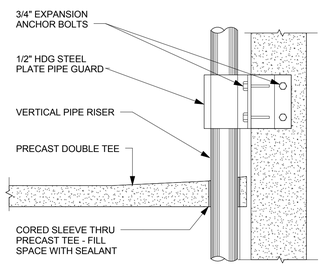

NOTE: PROVIDE PIPE GUARDS @ ALL VERTICAL RISERS IN PARKING AREAS NOT SET IN CHASES - SEE PLUMBING DRAWINGS FOR LOCATION & SIZE OF PIPES

ASSUME 3 PER LEVEL AND 1 GUARD AT ELECTRICAL CHASE AT GRADE, 2ND, AND 3RD LEVEL (5' WIDE AND 6" OFF WALL)

10 / A701 **Pipe Guard Vertical Detail**
3/4" = 1'-0"

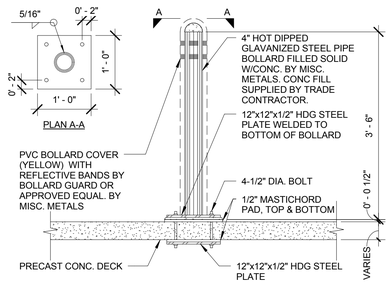

4 / A701 **BOLLARD @ SUPPORTED SLAB**
3/4" = 1'-0"

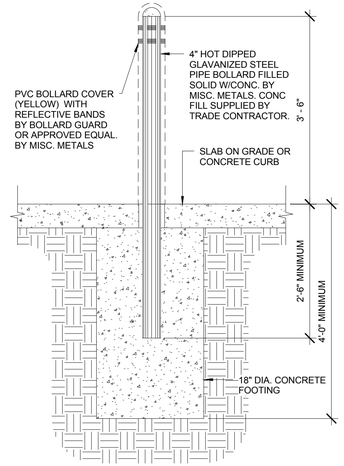

1 / A701 **BOLLARD @ GRADE DETAIL**
3/4" = 1'-0"

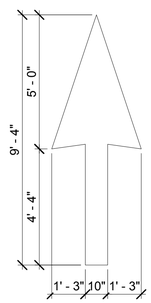

5 / A701 **THRU ARROW**
3/8" = 1'-0"

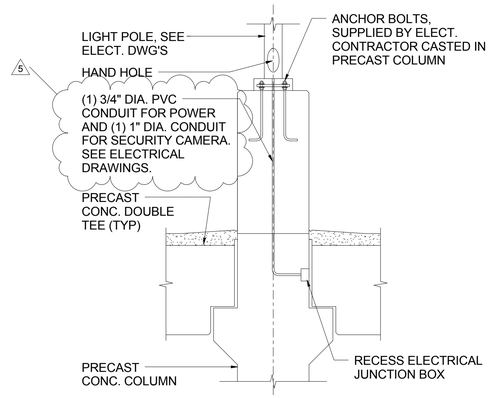

2 / A701 **LIGHT POLE-COLUMN**
1/2" = 1'-0"

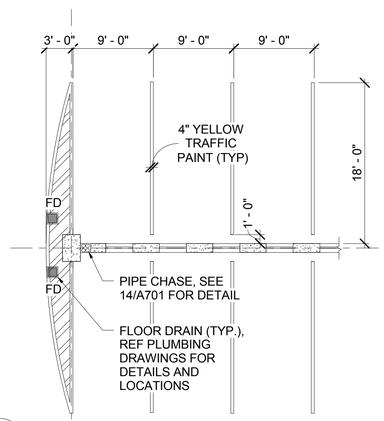

6 / A701 **9'x18' STALL STRIPING DETAILS**
1/8" = 1'-0"

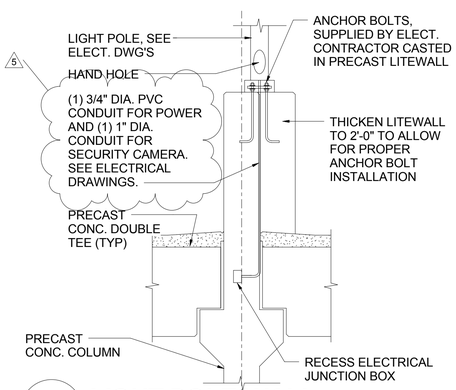

3 / A701 **LIGHT POLE-WALL**
1/2" = 1'-0"

DESMAN Design Management

Olive Street Parking Facility

Olive Street
Greenfield, MA

CONSTRUCTION DOCUMENTS - BID SET

ISSUE		
5	CD - Bid Set	09/06/17
4	Permit Set	08/23/17
2	100% CD	07/10/17
NO.	DESCRIPTION	DATE

Copyright © 2017 DESMAN, Inc. All rights reserved. No part of these documents may be reproduced in any form or by any means without written permission from DESMAN, Inc.

DRAWING TITLE:
TYPICAL DETAILS

DRAWING NO:
A701

SCALE: As indicated
DATE: 09/06/2017
PROJECT NO: 20-16105.01-1

DES.	DRWN.	CHK'D.
Designer	Author	Checker

A1

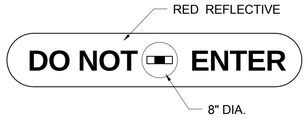

66"x12"
BACKGROUND - RED REFLECTIVE
LETTERS - 4 1/2" WHITE REFLECTIVE

A2

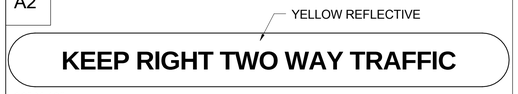

96" X 12"
BACKGROUND - YELLOW REFLECTIVE
LETTERS - 4.5" RED REFLECTIVE

E1

60"x12"
BACKGROUND - SAFETY RED
LETTERS- 5" WHITE REFLECTIVE
ARROW- TO MATCH SIGN BACKGROUND
ARROW BACKGROUND (CIRCLE)- WHITE REFLECTIVE 8" DIA.

E2

60"x12"
BACKGROUND - SAFETY RED
LETTERS- 5" WHITE REFLECTIVE
ARROW- TO MATCH SIGN BACKGROUND
ARROW BACKGROUND (CIRCLE)- WHITE REFLECTIVE 8" DIA.

P1

48"x12"
BACKGROUND - SAFETY GREEN
LETTERS - 6" WHITE REFLECTIVE
ARROW - TO MATCH SIGN BACKGROUND
ARROW BACKGROUND (CIRCLE) - WHITE REFLECTIVE 8" DIA.

P2

48"x12"
BACKGROUND - SAFETY GREEN
LETTERS - 6" WHITE REFLECTIVE
ARROW - TO MATCH SIGN BACKGROUND
ARROW BACKGROUND (CIRCLE) - WHITE REFLECTIVE 8" DIA.

1. A&B SIGN LETTERING STYLE IS HELVETICA MEDIUM (U.N.O.).
2. BEAM MOUNTED SIGNS ARE TO BE MOUNTED IN THE CENTER OF THE DRIVING AISLE. CLEARANCE NOTED IN DRAWINGS
3. ALL FASTENERS, MOUNTING BRACKETS, ETC. SHALL BE PAINTED THE IDENTICAL COLOR AS THE SIGN FACE OR OF THE AREA WHERE THEY PENETRATE THE SIGN.
4. LOCATION OF ALL SIGNS TO BE FIELD VERIFIED BY OWNERS REPRESENTATIVE AND SIGN COMPANY REPRESENTATIVE AFTER LIGHTING FIXTURES ARE IN PLACE.
5. UNLESS OTHERWISE NOTED ALL COLUMN AND WALL MOUNTED SIGNS SHALL BE MOUNTED AT 5'-0" FROM THE BOTTOM OF THE SIGN TO THE TOP OF THE SLAB BELOW.
6. ALL HANGERS & SIGN BACKS TO BE PAINTED FLAT GRAY OR LEFT STAINLESS OR ALUMINUM.
7. COLORS TO BE SELECTED BY ARCHITECT.

LEGEND

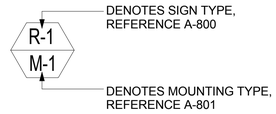

H1

H2

NOTE: SIGN LOCATED AT ALL HANDICAP PARKING SPACES
NOTE: 12"x18" BACKGROUND- REFLECTIVE WHITE LETTERS & BORDER

CB-1

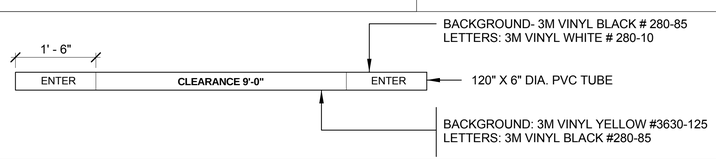

CB-2

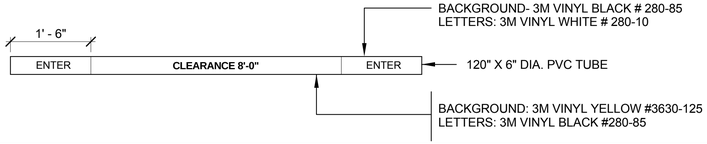

CB-3

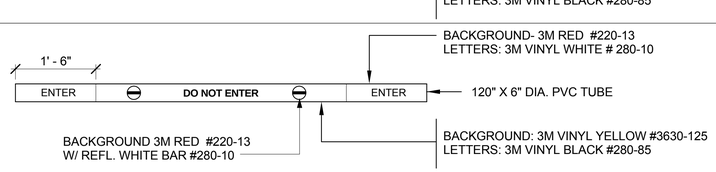

GARAGE LEVEL SIGNAGE

NOTE: COLOR SELECTION FOR GRAPHIC SIGNS TO BE DETERMINED BY ARCHITECT

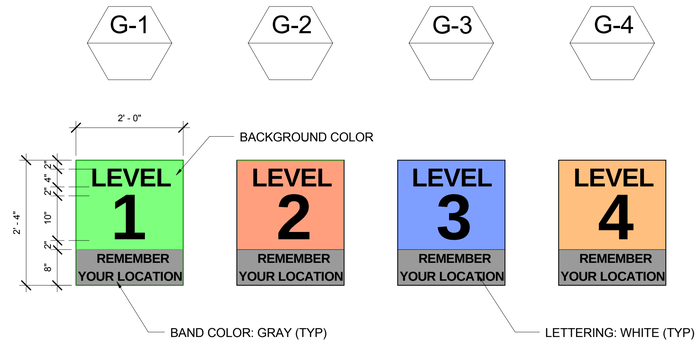

NOTE:

-LEVEL SIGNS COLOR CODED PER LEVEL
-SEE LEVEL PLANS FOR SIGN LOCATION & COUNT
-SIGNS TO BE MOUNTED 60" AFF TO BOTTOM OF SIGN

STAIR SIGNAGE

NOTE:

-REFERENCE A-208 FOR STAIR SIGNAGE DETAILS

ROOM SIGNAGE

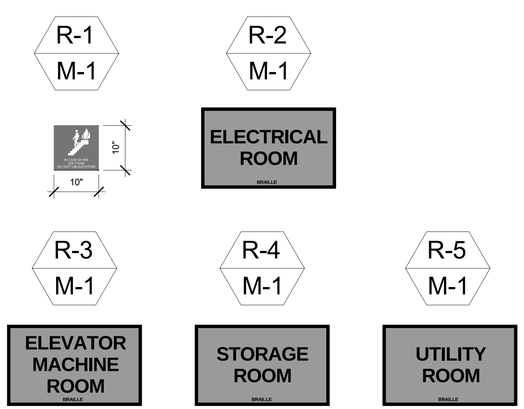

NOTE:

1. MELAMINE PLASTIC LAMINATE 1/8" THICK ALL LETTERS, NUMBERS AND/OR SYMBOLS SHALL BE 2" BLACK LETTERING WITH 1/2" BLACK BORDER
2. BACKGROUND TO BE ALUMINUM
3. ALL SIGNS TO HAVE BRAILLE PER THE AAB CMR 521 CODE
4. R-SIGNS ARE SIZED AS REQUIRED

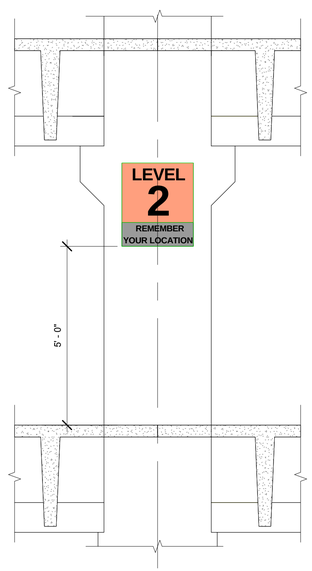

3

DESMAN
Design Management

Olive Street Parking Facility

Olive Street
Greenfield, MA

CONSTRUCTION DOCUMENTS - BID SET

ISSUE

NO.	DESCRIPTION	DATE
3	100% CD- MOD. 1	08/01/17

Copyright © 2017 DESMAN, Inc. All rights reserved. No part of these documents may be reproduced in any form or by any means without written permission from DESMAN, Inc.

DRAWING TITLE:
SIGNAGE DETAILS

DRAWING NO:
A800

SCALE: As indicated
DATE: 09/06/2017
PROJECT NO: 20-16105.01-1

DES.	DRWN.	CHK'D.
Designer	Author	Checker

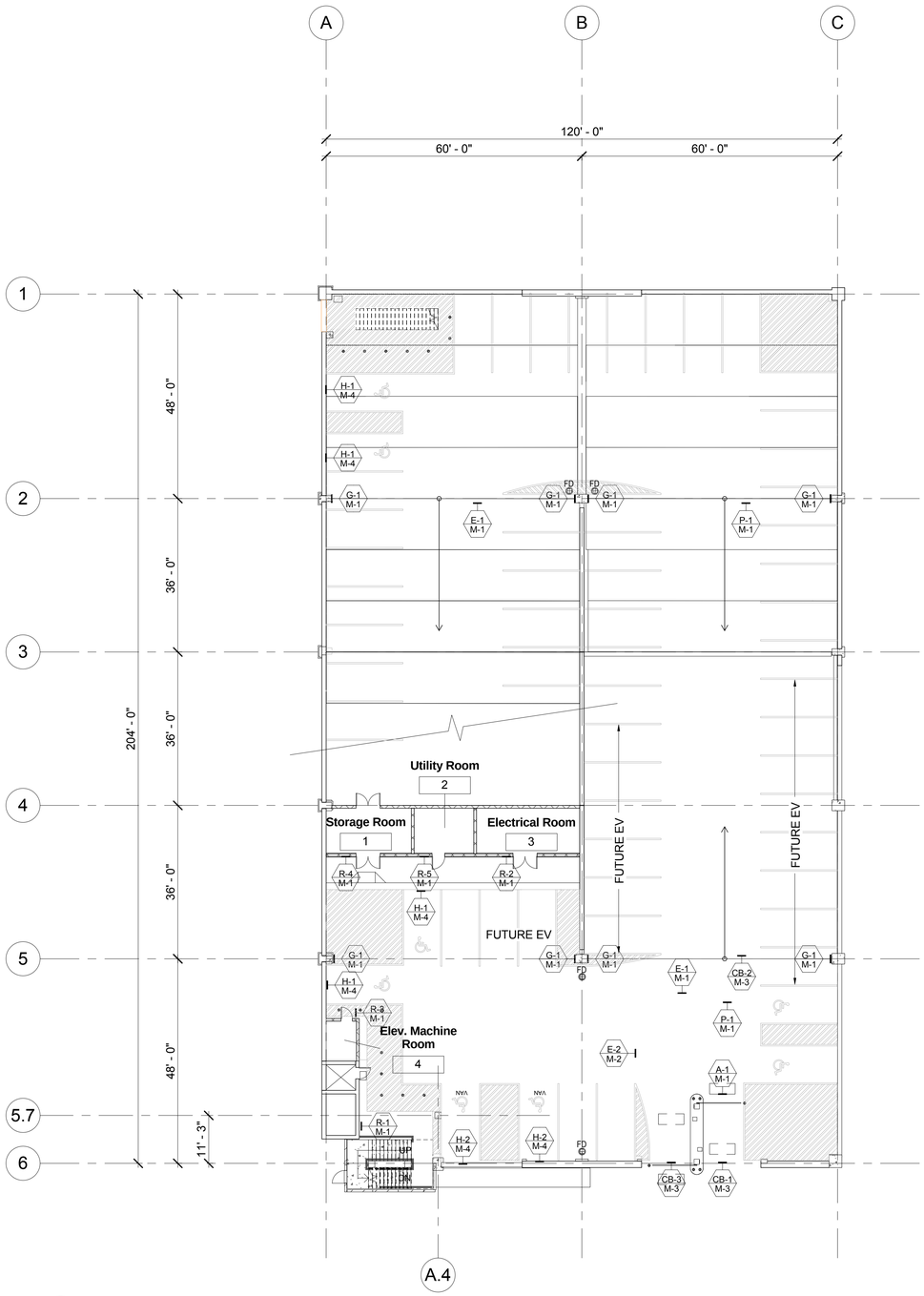

1 A801 Grade Level Signage Plan
SCALE: 1/16" = 1'-0"

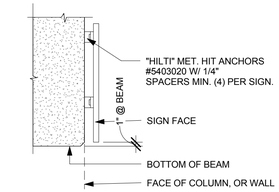

M-1 SURFACE MOUNTED SIGN

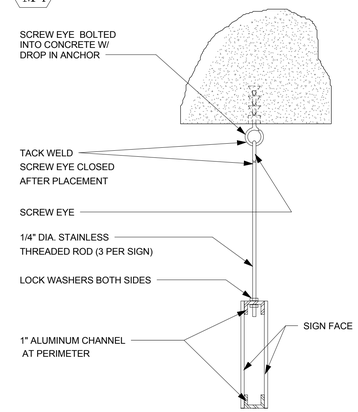

M-2 HANGING SIGN
(TYP. IN DIRECTION OF T'S

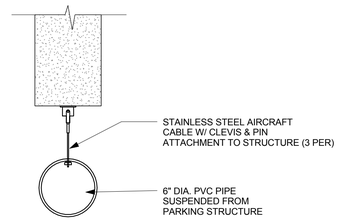

M-3 CLEARANCE BAR DETAIL

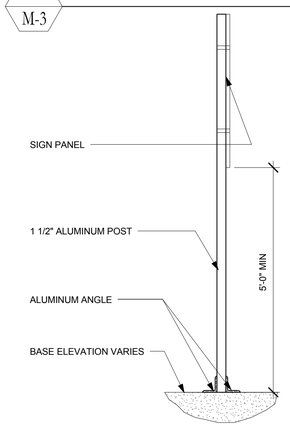

M-4 POLE MOUNTED SIGN

2 A801 MOUNTING SIGNAGE
SCALE: 1/2" = 1'-0"

DESMAN
Design Management

Olive Street Parking Facility

Olive Street
Greenfield, MA

CONSTRUCTION DOCUMENTS - BID SET

ISSUE

NO.	DESCRIPTION	DATE
3	100% CD- MOD. 1	08/01/17

Copyright © 2017 DESMAN, Inc. All rights reserved. No part of these documents may be reproduced in any form or by any means without written permission from DESMAN, Inc.

DRAWING TITLE:
GRADE SIGNAGE PLANS AND MOUNTING DETAILS

3

DRAWING NO:
A801

SCALE: As indicated
DATE: 09/06/2017
PROJECT NO: 20-16105.01-1

DES.	DRWN.	CHK'D.
Designer	Author	Checker

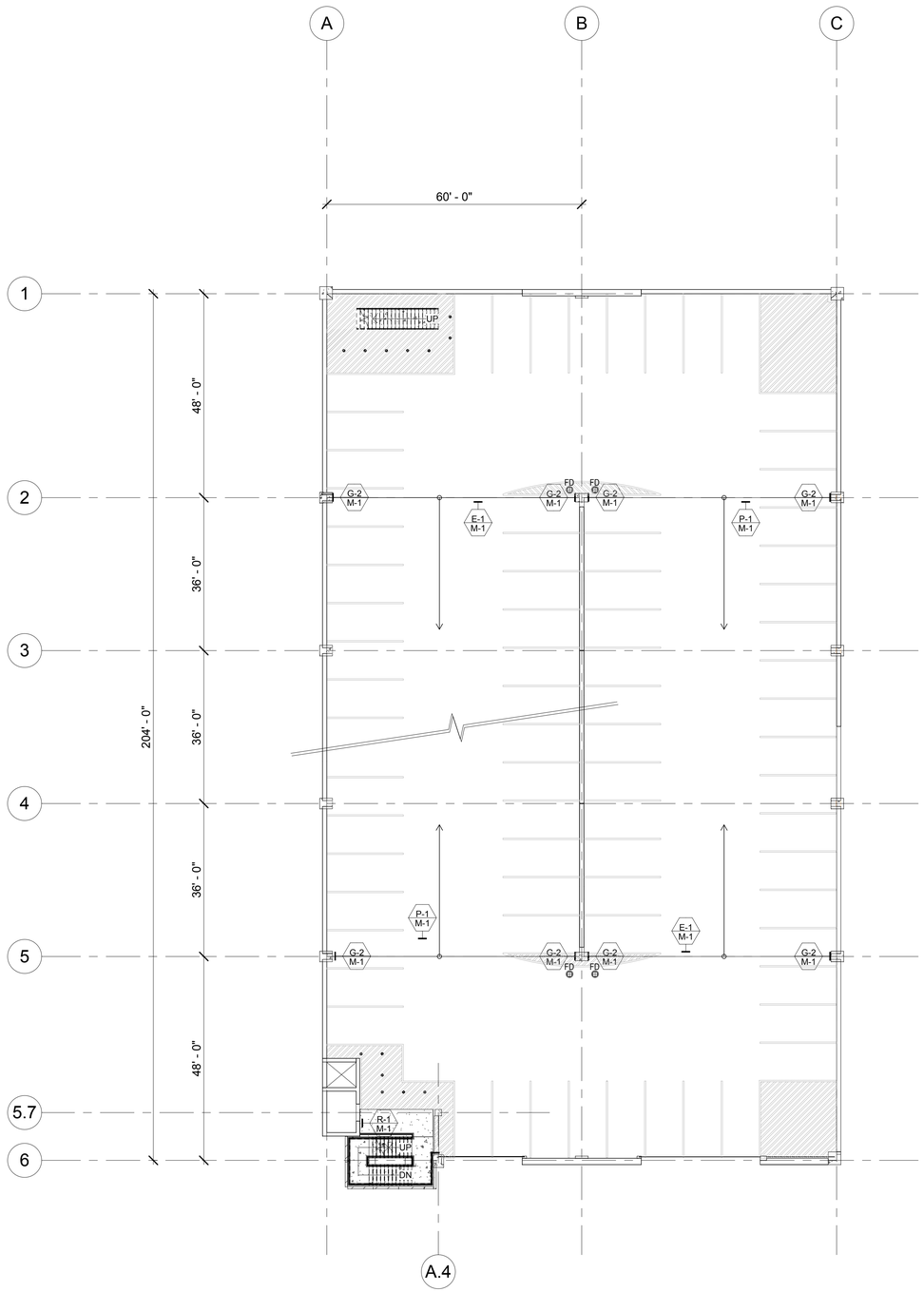

1 A802 Typical Level Signage Plan
SCALE: 1/16" = 1'-0"

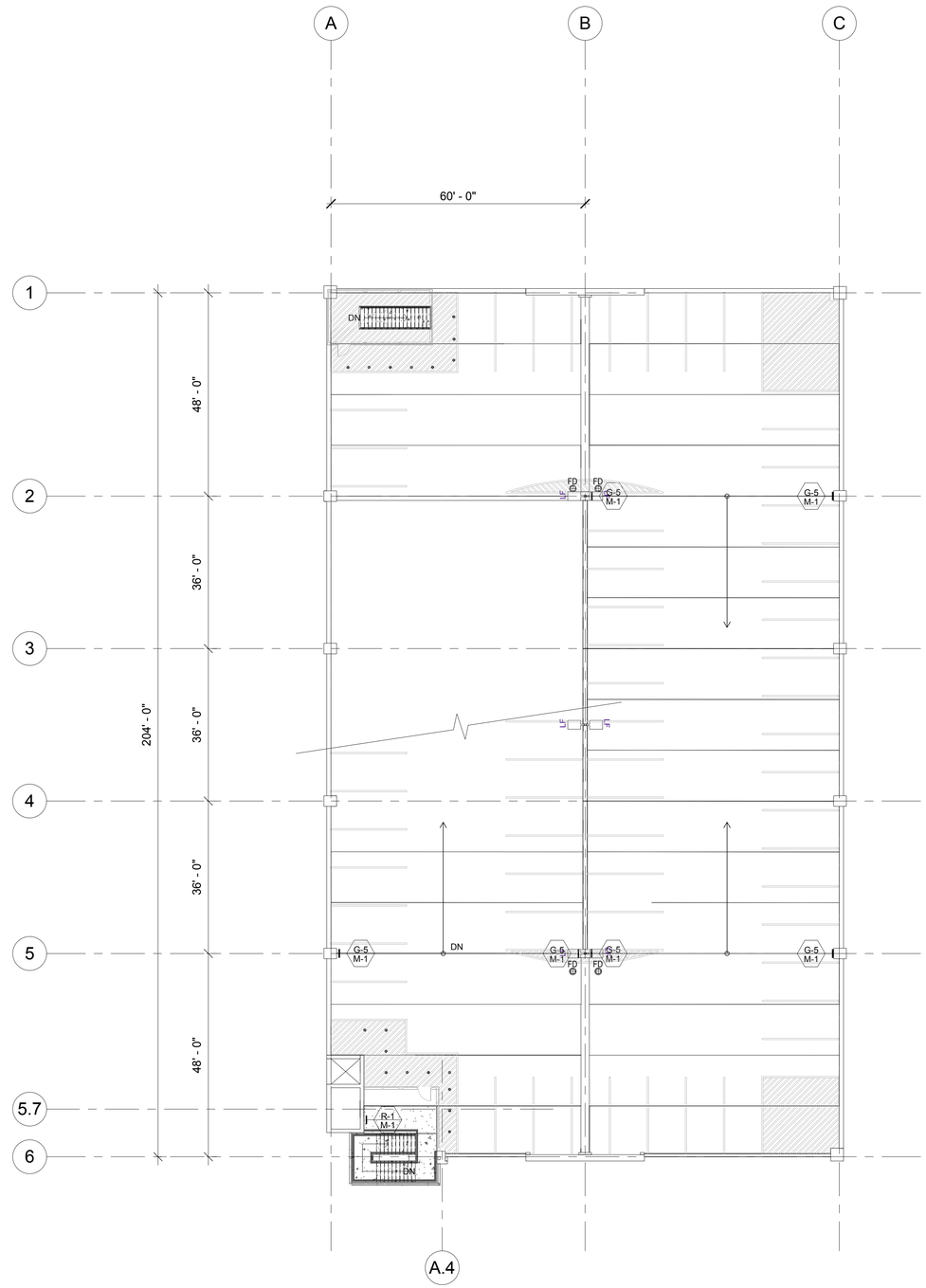

2 A802 Roof Level Signage Plan
SCALE: 1/16" = 1'-0"

DESMAN
Design Management

Olive Street Parking Facility

Olive Street
Greenfield, MA

CONSTRUCTION DOCUMENTS - BID SET

ISSUE

NO.	DESCRIPTION	DATE
3	100% CD- MOD. 1	08/01/17

Copyright © 2017 DESMAN, Inc. All rights reserved. No part of these documents may be reproduced in any form or by any means without written permission from DESMAN, Inc.

DRAWING TITLE:
TYPICAL & ROOF LEVEL SIGNAGE PLAN

3

DRAWING NO:
A802

SCALE: 1/16" = 1'-0"
DATE: 09/06/2017
PROJECT NO: 20-16105.01-1

DES.	DRWN.	CHK'D.
Designer	Author	Checker

GENERAL NOTES

1. ALL NOTES GIVEN ON THESE DRAWINGS ARE SUPPLEMENTAL TO THE PROJECT SPECIFICATIONS AND ARE NOT INTENDED TO REPLACE THEM. IN THE EVENT OF AN APPARENT CONFLICT BETWEEN THE NOTES AND THE PROJECT SPECIFICATIONS, THE CONTRACTOR MUST OBTAIN CLARIFICATION IN WRITING FROM THE ARCHITECT/ENGINEER.

2. ALL DESIGN AND CONSTRUCTION SHALL BE DONE IN ACCORDANCE WITH THE MOST STRINGENT OF THE GOVERNING CODE, THE LATEST EDITION OF THE STATE AND LOCAL CODES AND ALL OTHER PERTINENT CODES, REGULATIONS AND ORDINANCES.

3. DRAWINGS ARE NOT TO BE USED FOR SHOP DETAILING OR FOR CONSTRUCTION UNLESS SPECIFICALLY INDICATED STAMPED BY THE ARCHITECT/ENGINEER "FOR DETAILING" OR "FOR CONSTRUCTION". THESE DRAWINGS ARE NOT TO BE REPRODUCED FOR THE PURPOSE OF USING THEM AS SHOP DETAIL DRAWINGS.

4. STRUCTURAL DRAWINGS ARE INTENDED TO BE USED ALONG WITH CIVIL, ARCHITECTURAL, MECHANICAL & ELECTRICAL DRAWINGS. THE CONTRACTOR IS RESPONSIBLE FOR COORDINATING THE REQUIREMENTS OF ALL DRAWINGS IN TO THEIR SHOP DRAWINGS AND WORK.

5. NO OPENING OTHER THAN THOSE SHOWN ON DESIGN DRAWINGS AND APPROVED SHOP DRAWINGS, SHALL BE MADE WITHOUT THE WRITTEN APPROVAL OF THE ARCHITECT/ENGINEER.

6. ALL OPENINGS ARE GENERALLY NOT SHOWN ON THE STRUCTURAL DRAWINGS. REFER TO ARCHITECTURAL, MECHANICAL AND ELECTRICAL DRAWINGS FOR LOCATIONS AND DIMENSIONS OF THOSE OPENINGS. PROVIDE REINFORCING AROUND OPENINGS PER TYPICAL DETAILS SHOWN ON STRUCTURAL DRAWINGS.

7. NO CHANGE IN SIZE AND DIMENSION OF STRUCTURAL MEMBERS SHALL BE MADE WITHOUT THE WRITTEN APPROVAL OF THE ARCHITECT/ENGINEER.

8. DO NOT SCALE THESE DRAWINGS, USE DIMENSIONS SHOWN ON THE DRAWINGS.

9. THE STRUCTURE IS DESIGNED TO FUNCTION AS A UNIT UPON COMPLETION. BASED ON THE CONTRACTOR'S CONSTRUCTION METHODS AND SEQUENCING OF CONSTRUCTION, THE CONTRACTOR SHALL RETAIN A LICENSED PROFESSIONAL ENGINEER TO DESIGN LATERAL SUPPORT SYSTEM REQUIRED TO RESIST LATERAL LOADS AND FOR OVERALL STABILITY OF THE STRUCTURE UNTIL COMPLETION. THE CONTRACTOR SHALL FURNISH AND PROVIDE THE NECESSARY BRACING AND SUPPORTS DURING CONSTRUCTION AND IS RESPONSIBLE FOR THE OVERALL STABILITY OF THE STRUCTURE UNTIL COMPLETION.

10. THE CONTRACTOR IS RESPONSIBLE FOR LIMITING THE AMOUNT OF CONSTRUCTION LOAD IMPOSED UPON STRUCTURAL FRAMING. CONSTRUCTION LOAD SHALL NOT EXCEED THE CAPACITY OF THE FRAME AT THE TIME THE LOADS ARE IMPOSED.

11. THE CONTRACTOR SHALL BE RESPONSIBLE FOR ADEQUATELY SHEETING, SHORING AND UNDERPINNING THE PROJECT. ITS NECESSARY TO PREVENT ANY ADVERSE EFFECTS ON ADJACENT STRUCTURES AND PROPERTIES DUE TO CONSTRUCTION ACTIVITIES.

12. THE CONTRACTOR'S CONSTRUCTION AND/OR ERECTION SEQUENCES SHALL RECOGNIZE AND CONSIDER THE EFFECTS OF THERMAL MOVEMENTS OF STRUCTURAL ELEMENTS.

13. MINIMUM HEADROOM CLEARANCE IN THE GARAGE SHALL BE 10'-0" AT GRADE LEVEL AND 8'-0" ON TYPICAL LEVELS BETWEEN THE GIRDERS/DOUBLE TEES AND THE FINISHED FLOOR, TYPICAL. THE CONTRACTOR SHALL MEASURE CLEAR HEIGHT BELOW ALL BEAMS BEFORE PLACING CONCRETE. THE CONTRACTOR SHALL NOTIFY IN WRITING THE ARCHITECT/ENGINEER IMMEDIATELY IF CLEAR HEIGHT IS LESS INDICATED ON THE DRAWINGS.

DESIGN CRITERIA 1

1. CODES AND SPECIFICATIONS:
   1.1 MASSACHUSETTS STATE BUILDING CODE, 8TH EDITION WITH 780 CMR AMENDMENTS TO THE INTERNATIONAL BUILDING CODE 2009
   1.2 ACI 318-08 BUILDING CODE REQUIREMENTS FOR REINFORCED CONCRETE
   1.3 ASCE 7-05 MINIMUM DESIGN LOADS FOR BUILDINGS AND OTHER STRUCTURES
   1.4 AMERICAN DISABILITIES ACT - ACCESSIBILITY GUIDELINES
   1.5 AISC SPECIFICATIONS AND DESIGN MANUALS - 14TH EDITION
   1.6 ARCHITECTURAL ACCESS REGULATIONS 527 CMR 21

   CONSTRUCTION TYPE: IIB

2. DESIGN LOADS:

   2.1 DEAD LOAD:

   A. TYPICAL PRECAST FRAMING LEVEL:
      A.1 FLOOR FRAMING _____ ACTUAL SELF WEIGHT
      A.2 GIRDER AND BEAMS _____ ACTUAL SELF WEIGHT
      A.3 COLUMN _____ ACTUAL SELF WEIGHT
      A.4 SPANDREL PANEL _____ ACTUAL SELF WEIGHT

   2.2 LIVE LOAD (OCCUPANCY LOAD U.N.O.):

   A. GARAGE ROOF LEVEL:
      A.1 OCCUPANCY CATEGORY _____ II
      A.2 GROUND SNOW LOAD _____ Pg=50 PSF
      A.3 IMPORTANCE FACTOR _____ 1.0
      A.4 SNOW EXPOSURE FACTOR _____ Ce=1.0
      A.5 THERMAL FACTOR _____ Ct=1.2
      A.6 SNOW IMPORTANCE FACTOR _____ I =1.0
      A.7 DESIGN SNOW LOAD PER ASCE 7-05 _____ Pfmin = 35 PSF
      A.8 DRIFTING SNOW PER ASCE 7-05 _____ Pf = 42 PSF
      A.9 TOTAL GARAGE ROOF LOAD (SNOW AND OCCUPANCY) _____ 82 PSF

   B. TYPICAL FLOOR _____ 40 PSF

   C. STAIRS AND LOBBIES _____ 100 PSF

   2.3 WIND LOAD PER ASCE 7 - 05

   BASIC WIND SPEED _____ 90 MPH
   WIND IMPORTANCE FACTOR _____ I =1.00
   WIND EXPOSURE _____ B

   2.4 SEISMIC LOADS:

   A. SEISMIC LOADS AS PER MASSACHUSETTS BASIC BUILDING CODE, 8TH EDITION
   B. SITE CLASS "E" - AS PER. GEOTECHNICAL REPORT OF O'REILLY, TALBOT & OKUN ASSOCIATED DATED FEBRUARY 23, 2017
   C. MAPPED SPECTRAL RESPONSE ACCELERATION PARAMETERS
      Ss = 0.230
      S1 = 0.069
   D. SEISMIC DESIGN CATEGORY = "C"
   E. SITE SPECIFIC SITE CLASSIFICATION
      Fa=2.5
      Fv=3.5
   F. SEISMIC ANALYSIS PROCDURE_____EQUIVALENT LATERAL FORCES
   G. RESPONSE MODIFICAITON FACTOR_____R=4
   H. DEFLECTION MODIFICATION FACTOR____Cd=4
   I. INTERMEDIATE PRECAST BEARING WALL SYSTEM

   2.5 MISC. LOADS:

   A. AUTO IMPACT: 6000 LBS. SERVICE LOAD @ 1'-6" ABOVE DRIVE SURFACES A SECOND LOAD CONDITION AT 2'-3" AND THE MORE SEVERE LOAD CONDITION SHALL GOVERN THE DESIGN.
   B. AUTO POINT LOAD ON DECK: 3000 LBS. ON 4.5" X 4.5" AREA

   2.6 ADDITIONAL FUTURE LOADING - SOLAR ARRAY

   THE STRUCTURE AND FOUNDATIONS HAVE BEEN DESIGNED FOR ADDITIONAL LOADING OF A SOLAR ARRAY. SOLAR ARRAY STRUCTURE TO BE DETERMINED, SOLAR PANELS AND ARRAY ASSUMED TO BE 10 PSF.

FOUNDATION NOTES

1. THE FOUNDATION DESIGN IS BASED ON THE GEOTECHNICAL INVESTIGATION AND REPORT DATED FEBRUARY 23, 2017 PREPARED BY O'REILLY, TALBOT & OKUN ASSOCIATED DATED FEBRUARY 23, 2017. IT IS THE RESPONSIBILITY OF THE CONTRACTOR TO REVIEW THE SOILS REPORT PRIOR TO BIDDING. ALL WORK SHALL BE DONE PER THE RECOMMENDATIONS PROVIDED WITHIN GEOTECHNICAL ENGINEER REPORT AND AMENDMENT.

2. ALL SOIL SUPPORTED FOOTINGS SHALL BE FOUNDED UPON RESIDUAL SOIL WITH A MINIMUM ALLOWABLE BEARING PRESSURE OF 9 KSF IN FOUNDATION AREAS WHERE SOIL IMPROVEMENTS HAVE OCCURED VERIFIED AND APPROVED BY THE GEOTECHNICAL ENGINEER. THE BOTTOM OF THE FOOTING ELEVATIONS AND SOIL BEARING CAPACITIES AS SHOWN ON THE DRAWINGS ARE BASED ON THE SOIL BORING DATA AND REPORT. FINAL, EXACT ELEVATIONS AND SOIL BEARING CAPACITIES SHALL BE FIELD DETERMINED AND VERIFIED BY THE OWNER'S GEOTECHNICAL ENGINEER AND REVIEWED BY THE ARCHITECT/ENGINEER DURING CONSTRUCTION.

3. THE NATURAL SOIL SUBGRADE UNDER ALL FOOTINGS ON NATURAL SOILS AND SLABS SHALL BE PREPARED AS INDICATED IN THE GEOTECHNICAL INVESTIGATION AND REPORT. THE SOIL SUBGRADE FOR ALL FOOTINGS AND SLABS SHALL BE INSPECTED AND APPROVED BY THE OWNER'S GEOTECHNICAL ENGINEER PRIOR TO PLACING FOUNDATION CONCRETE OR CONCRETE SLABS. THE BOTTOM OF GENERAL EXCAVATION SHALL BE COMPACTED BY A VIBRATORY ROLLER COMPACTOR AND APPROVED BY THE GEOTECHNICAL ENGINEER.

4. ANY SOFT, EXCESSIVELY YIELDING, ORGANIC OR MATERIAL DEEMED UNACCEPTABLE BY THE GEOTECHNICAL ENGINEER AND/OR THE OWNERS TESTING AGENT, SHALL BE REMOVED FROM THE EXCAVATION AND REPLACED WITH CONTROLLED INERT GRANULAR FILL APPROVED BY THE OWNER'S GEOTECHNICAL ENGINEER. UNDERCUTS SHOULD EXTEND LATERALLY ON A 2(H): 1(V) SLOPE A MINIMUM OF 6" AWAY FROM THE EDGE OF FOOTING.

5. ALL WELL GRADED GRANULAR MATERIAL FOR FILLS DEEMED ACCEPTABLE BY THE OWNER'S GEOTECHNICAL ENGINEER SHALL BE PLACED IN LIFTS NOT EXCEEDING 8 INCHES IN LOOSE THICKNESS, AND COMPACTED TO A MINIMUM OF 95 PERCENT OF MAXIMUM DRY DENSITY AS DETERMINED BY THE MODIFIED PROCTOR TEST (ASTM D1557).

6. NO FOOTINGS OR SLABS SHALL BE PLACED INTO OR AGAINST SUBGRADE CONTAINING FREE WATER, FROST OR ICE UNTIL SUCH SUBGRADES ARE FULLY PROTECTED BY THE PERMANENT BUILDING STRUCTURE. SHOULD WATER OR FROST ENTER A FOOTING EXCAVATION AFTER SUB GRADE APPROVAL, THE SUBGRADE SHALL BE RE-INSPECTED BY THE OWNER'S GEOTECHNICAL ENGINEER AFTER REMOVAL OF WATER OR FROST.

7. ALL FOOTINGS SUBGRADES AND SLAB SUBGRADES INCLUDING PIT SLABS, ALL BACKFILL AROUND AND ABOVE ALL FOUNDATION ELEMENTS,FOOTINGS,CAPS,MATS AND PITS, SHALL BE COMPACTED TO MINIMUM 95 PERCENT OF MAXIMUM DRY DENSITY BASE ON LABORATORY DESIGNATION ASTM D1557.

8. THE CONTRACTOR SHALL LOCATE CONSTRUCTION JOINTS IN THE CONTINUOUS STRIP FOOTINGS SUCH THAT THE MAXIMUM LENGTH OF THE CONCRETE PLACEMENT DOES NOT EXCEED 60 FEET. PLACE CONTROL/CONSTRUCTION JOINTS IN WALLS AS SHOWN ON THE DRAWINGS. THE CONTRACTOR SHALL UTILIZE A CONSTRUCTION SEQUENCE/PATTERN SUCH THAT THE EFFECT OF SHRINKAGE IS MINIMIZED. THE CONTRACTOR SHALL SUBMIT A PROPOSED SEQUENCE TO THE ARCHITECT/ENGINEER FOR REVIEW.

9. THE CONCRETE FOR EACH ISOLATED FOOTING SHALL BE PLACED IN ONE (1) CONTINUOUS PLACEMENT.

10. THE CONTRACTOR SHALL LOCATE, PROTECT AND MAINTAIN ALL EXISTING UTILITIES. ANY DAMAGE TO THE EXISTING UTILITIES CAUSED BY THE CONTRACTOR SHALL BE REPAIRED BY THE CONTRACTOR TO THE SATISFACTION OF THE AUTHORITY HAVING JURISDICTION AND AT NO COST TO THE OWNER.

11. THE CONTRACTOR SHALL NOTIFY THE ARCHITECT/ENGINEER IN THE EVENT ANY EXISTING UTILITIES, UTILITY STRUCTURES OR OBSTRUCTIONS INTERFERING WITH THE PROPER INSTALLATION OF THE FOUNDATION WORK.

12. ALL FOOTINGS SHALL BEAR A MINIMUM OF 4'-0" BELOW FINISHED GRADES.

13. SEE PLUMBING DRAWINGS FOR DRAINAGE SYSTEM AND SPECIAL GRANULAR FILL MATERIALS.

14. SEE ARCHITECTURAL DRAWINGS FOR ALL WATERPROOFING AND DAMP PROOFING DETAILS.

15. ALL ELEVATIONS ARE REFERENCED TO U.S.G.S.

16. THE CONTRACTOR SHALL EXERCISE CAUTION WHEN WORKING IN THE AREAS ADJACENT TO EXISTING STRUCTURES, PROPERTY AND UTILITIES. THE CONTRACTOR SHALL BE RESPONSIBLE FOR PROVIDING AND MAINTAINING MEASURES PROTECTING EXISTING STRUCTURES, PROPERTY AND UTILITIES. ANY DAMAGES TO THE EXISTING STRUCTURES CAUSED BY THE CONTRACTOR'S MEANS AND METHODS AND/OR CONTRACTOR'S FAILURE TO PROVIDE PROTECTION SHALL BE REPAIRED OR REPLACED BY THE CONTRACTOR TO THE SATISFACTION OF THE AUTHORITY HAVING JURISDICTION AT NO COST TO THE OWNER.

17. SEE SPECIFICATIONS FOR ADDITIONAL REQUIREMENTS.

CONCRETE NOTES

1. ALL CONCRETE WORK SHALL CONFORM TO THE REQUIREMENTS OF ACI 318 AND ACI 301. THESE DOCUMENTS SHALL BE AVAILABLE IN THE FIELD OFFICE.

2. EXCEPT WHERE OTHERWISE INDICATED, CONCRETE TYPES AND MINIMUM 28-DAY COMPRESSIVE STRENGTHS SHALL BE AS FOLLOWS:
   A. SLAB ON GRADE ---------- 5,000 PSI, REGULAR WEIGHT
   B. FOOTINGS, GRADE BEAMS, PADS, RETAINING WALLS AND FOUNDATION WALLS ---------- 5,000 PSI, REGULAR WEIGHT
   C. ALL SUPPORTED CAST-IN-PLACE CONCRETE ---------- 5,000 PSI, REGULAR WEIGHT

3. ALL CONCRETE EXPOSED TO WEATHER AND/OR FREEZE-THAW SHALL BE AIR ENTRAINED WITH AIR CONTENT. AS INDICATED IN TABLE 4.2.1 OF ACI 318

4. CEMENT SHALL CONFORM TO ASTM C150 TYPE I OR TYPE III. USE ONLY ONE BRAND OF CEMENT FOR ALL EXPOSED TO VIEW CONCRETE. AGGREGATES SHALL CONFORM TO ASTM C33 (REGULAR WEIGHT). ALL CONCRETE SHALL CONTAIN AN APPROVED WATER REDUCING ADMIXTURE. NO CALCIUM CHLORIDE SHALL BE USED IN ANY CONCRETE.

5. ALL REINFORCING BARS SHALL CONFORM TO ASTM A615, GRADE 60, UNLESS OTHERWISE NOTED ON THE DRAWINGS. WHERE WELDING OF REINFORCEMENT BARS IS REQUIRED, USE STEEL BARS CONFORMING TO ASTM A706 GRADE 60, UNLESS NOTED OTHERWISE. ALL WELDED WIRE FABRIC SHALL CONFORM TO ASTM A185. REFER TO SPECIFICATIONS FOR REINFORCING TO BE EPOXY COATED.

6. ALL CONCRETE REINFORCEMENT SHALL BE DETAILED, FABRICATED, LABELED, SUPPORTED AND SPACED IN FORMS AND SECURED IN PLACE IN ACCORDANCE WITH THE PROCEDURES AND REQUIREMENTS OUTLINED IN THE LATEST EDITION OF THE "MANUAL OF STANDARD PRACTICE FOR DETAILING REINFORCED CONCRETE STRUCTURES", ACI 315. BAR SUPPORTS IN CONTACT WITH EXPOSED SURFACES SHALL BE PLASTIC TIPPED.

7. ALL 135° HOOKS SHALL BE MINIMUM 6d. ALL OTHER HOOKS SHALL BE STANDARD ACI 90° OR 180° HOOKS.

8. SHOP DRAWINGS SHOWING REINFORCING DETAILS, INCLUDING STEEL SIZES, SPACING AND PLACEMENT SHALL BE SUBMITTED TO THE ARCHITECT/ENGINEER FOR REVIEW PRIOR TO FABRICATION.

9. THE CONTRACTOR SHALL SUBMIT DETAILED DRAWINGS SHOWING THE LOCATIONS OF ALL CONSTRUCTION JOINTS, REVEALS, CURBS, SLAB DEPRESSIONS, SLEEVES, OPENINGS, ETC.

10. ALL REINFORCING SPLICES SHALL CONFORM TO THE REQUIREMENTS OF ACI 318, LATEST EDITION. BUT IN NO CASE SHALL BE LESS THAN 48 BAR DIAMETERS, UNLESS NOTED OTHERWISE. ALL WELDED WIRE FABRIC SHALL BE LAPPED TWO (2) FULL MESH PANELS AND TIED SECURELY. WHERE REQUIRED, DOWELS SHALL MATCH SIZE AND NUMBER OF MAIN REINFORCING, UNLESS NOTED OTHERWISE.

11. ALL WALLS SHALL BE REINFORCED WITH AT LEAST #4@12" EACH WAY, EACH FACE, UNLESS NOTED OTHERWISE. ALL SLABS-ON-GRADE SHALL BE REINFORCED WITH AT LEAST ONE (1) LAYER OF 6X6-W4.0XW4.0 W.W.F., UNLESS NOTED OTHERWISE. PROVIDE ONE (1) LAYER OF 6X6-W1.4XW1.4 W.W.F. CONTINUOUS IN ALL CONCRETE FILLS OVER THE STRUCTURAL SLAB, UNLESS NOTED OTHERWISE.

12. ADDITIONAL BARS SHALL BE PROVIDED AROUND ALL FLOOR AND WALL OPENINGS, AS SHOWN ON DETAILS.

13. EACH SUBCONTRACTOR SHALL PROVIDE THEIR REQUIREMENTS FOR SLEEVES IN CONCRETE FORMWORK. SLEEVE LOCATIONS AND SIZES SHALL BE SUBMITTED TO, AND APPROVED BY THE ARCHITECT/ENGINEER PRIOR TO PLACEMENT. SLEEVE INSTALLATION SHALL BE COORDINATED BY THE GENERAL CONTRACTOR AND PROVIDED BY RESPECTIVE SUB-CONTRACTORS. NO CORING OF THE CONCRETE WORK WILL BE ALLOWED WITHOUT AN EXPRESSED WRITTEN CONSENT OF THE ARCHITECT/ENGINEER.

14. PLACE ALL SLABS-ON-GRADE WITH AN APPROVED PATTERN AND SEQUENCE OF CONSTRUCTION JOINTS TO MINIMIZE SHRINKAGE CRACKS.

15. DESIGN OF FORMWORK FOR CONCRETE SHALL BE THE RESPONSIBILITY OF THE CONTRACTOR. THE DESIGN SHALL INCLUDE ALL FORCES ACTING UPON FORMWORK BEFORE, DURING AND AFTER CONCRETE PLACEMENT. THE CONTRACTOR'S PROFESSIONAL ENGINEER REGISTERED IN THE STATE WHERE THE WORK IS PERFORMED, SHALL DESIGN ALL FORMWORK AND ASSOCIATED SHORING, BRACING AND ANCHORAGE.

16. CONCRETE TESTING WILL BE PERFORMED BY THE OWNER'S TESTING LABORATORY IN ACCORDANCE WITH ACI 301 SUBSECTION 1.6. AS FOLLOWS: FOR COMPRESSIVE STRENGTH TESTS A SET OF SPECIMENS SHALL CONSIST OF FOUR (4) SPECIMENS. TAKE ONE SET OF SPECIMENS FOR EACH 100 CUBIC YARDS OR 5000 SQ. FT. OF FLOOR OR WALL SURFACE AREA (WHICHEVER IS LESS), OR FRACTION THEREOF FOR EACH CONCRETE CLASS PLACED IN ANY ONE DAY. TEST ONE (1) SPECIMEN AT 7 DAYS, TWO (2) SPECIMENS AT 28 DAYS, AND KEEP ONE IN RESERVE.

17. SEE SPECIFICATION FOR ADDITIONAL REQUIREMENTS.

STRUCTURAL PRECAST CONCRETE NOTES

1. ALL STRUCTURAL PRECAST CONCRETE SHALL BE DESIGNED FOR THE SPAN AND LOADING CONDITIONS SHOWN ON THE DRAWINGS OR AS REQUIRED BY APPLICABLE CODES, INCLUDING BUT NOT LIMITED TO THOSE IMPOSED BY THE ERECTION SEQUENCES AND METHODS ANALYSIS AND DESIGN SHALL BE BY A PRECAST MANUFACTURER'S PROFESSIONAL ENGINEER REGISTERED IN THE STATE OF MASSACHUSETTS. ALL DESIGN CALCULATIONS, INCLUDING THE ANALYSIS AND DESIGN FOR LATERAL AND GRAVITY LOADS DESIGN OF ALL STRUCTURAL ELEMENTS AND CONNECTIONS, SHALL BE SUBMITTED TO THE ARCHITECT FOR REVIEW PRIOR TO THE START OF FABRICATION. FOUNDATION FOR THE STRUCTURE HAS BEEN DESIGNED FOR LATERAL AND GRAVITY LOADS. ANY CHANGES REQUIRED IN THE FOUNDATIONS DUE TO MODIFICATION OF PRECAST DESIGN SHALL BE DONE WITHOUT ANY ADDITIONAL COST TO THE OWNER.

2. DETAILED AND CHECKED SHOP DRAWINGS SHOWINGS ALL STRUCTURAL ELEMENTS, DETAILS AND CONNECTIONS SHALL BE SUBMITTED TO THE ARCHITECT FOR REVIEW PRIOR TO THE START OF FABRICATION.

3. THE PRECAST CONCRETE MANUFACTURER SHALL BE RESPONSIBLE FOR FULL COORDINATION OF ALL ARCHITECTURAL, MECHANICAL, ELECTRICAL AND PLUMBING DETAILS AS THEY AFFECT THE STRUCTURAL SYSTEM.

4. THERE SHALL BE NO FIELD CUTTING OF PRECAST ELEMENTS WITHOUT THE PRIOR REVIEW OF THE ARCHITECT/ENGINEER AND SUBSEQUENT WRITTEN CONSENT BY THE PRECAST MANUFACTURER.

5. ALL DETAILING, FABRICATION AND PLACING OF REINFORCING BARS SHALL CONFORM TO THE "BUILDING CODE REQUIREMENTS FOR REINFORCED CONCRETE", ACI 318 AND THE "MANUAL OF STANDARD PRACTICE FOR DETAILING REINFORCED CONCRETE STRUCTURES", ACI 315, LATEST EDITION.

6. SEE ARCHITECTURAL DRAWINGS AND SPECIFICATIONS FOR SPECIAL ARCHITECTURAL CONCRETE REQUIREMENTS TO INCLUDE LOCATION, MIX DESIGN, FORMWORK, FINISH, ETC.

7. THE CONTRACTOR SHALL COORDINATE PRECAST, CAST-IN-PLACE AND STRUCTURAL STEEL WORK WITH THE ARCHITECTURAL AND STRUCTURAL DRAWINGS AND PROVIDE ALL NECESSARY INSERTS, REGLETS, ETC. REQUIRED.

8. CONCRETE SHALL ATTAIN THE FOLLOWING MINIMUM COMPRESSIVE STRENGTH OF 5000 PSI AT TWENTY-EIGHT (28) DAYS.

9. ALL REINFORCING SHALL CONFORM TO ASTM A615, GRADE 60, UNLESS NOTED OTHERWISE. REINFORCING STEEL BARS WELDED TO STEEL INSERTS AND STRUCTURAL SHAPES SHALL CONFORM TO ASTM A615, GRADE 40 OR ASTM A706, GRADE 60, AND WELDING SHALL CONFORM TO AWS D1.4 "STRUCTURAL WELDING CODE-REINFORCING STEEL", LATEST EDITION. ALL WELDMENTS SHALL RECEIVE TWO (2) COATS OF PRIMER.

10. ALL WELDED WIRE FABRIC SHALL CONFORM TO ASTM A185.

11. ALL PRESTRESSING STEEL SHALL CONFORM TO ASTM A416, STRESS RELIEVED, LOW RELAXATION, 7-WIRE STRAND, GRADE 270 KSI.

12. ALL STEEL EMBEDS SHALL CONFORM TO ASTM A36.

13. ALL FLANGE-TO-FLANGE CONNECTIONS BETWEEN ADJACENT DOUBLE TEES AND EXPANSION BEARING ASSEMBLIES SHALL BE STAINLESS STEEL. ALL CONNECTION PLATES, INSERTS, BOLTS, NUTS AND WASHERS, COIL RODS AND COIL INSERTS SHALL BE HOT DIP GALVANIZED IN ACCORDANCE WITH ASTM A123, OR ASTM A153, AS APPLICABLE. SURFACE PREPARATION OF THE COMPONENTS PRIOR TO GALVANIZING SHALL BE CONSISTENT WITH RECOMMENDATIONS BY THE STRUCTURAL STEEL PAINTING COUNCIL (SSPC). AREAS OF EMBEDS DESIGNATED FOR FIELD WELDING SHALL BE FREE OF GALVANIZING WITHIN 3" OF THE WELD.

14. ALL DAMAGED GALVANIZING AS WELL AS FIELD WELDED CONNECTIONS SHALL BE CLEANED OF LOOSE AND DELETERIOUS MATERIALS AND TOUCHED UP WITH TWO (2) COATS OF ZINC-RICH PAINT IN ACCORDANCE WITH SSPC-PAINT 20.

15. ALL GROUT SHALL BE OF THE NON-SHRINK, NON-FERROUS TYPE WITH MINIMUM f'c = 6000 PSI 28-DAY STRENGTH.

16. ERECTION SEQUENCE AND REQUIREMENTS ARE AS FOLLOWS. NO DEVIATIONS FROM THE FOLLOWING SEQUENCE AND REQUIREMENTS SHALL BE ALLOWED WITHOUT THE APPROVAL OF THE ARCHITECT/ENGINEER.
   A. BRACE COLUMNS IN N-S AND E-W DIRECTION AGAINST ERECTION LOADS AND ALL LATERAL LOAD DURING ERECTION.
   B. DRY-PACK UNDER ALL COLUMN BASE PLATES.
   C. PLACE SPANDRELS AND/OR LEDGER BEAMS.
   D. BOLT THE CONNECTIONS FULLY TIGHT.
   E. BOLT THE TOP CONNECTION FULLY TIGHT.
   F. ERECT TEES AND WELD TEE FLANGE TO TEE FLANGE CONNECTIONS WHERE REQUIRED.
   G. THREAD COIL RODS ALONG SPANDRELS TO EXTEND INTO CAST-IN-PLACE TOPPING.
   H. PLACE TOPPING REINFORCEMENT AND CONCRETE TOPPING.
   I. GROUT BETWEEN ALL MEMBERS AS REQUIRED.
   J. REMOVE BRACING AFTER GROUT HAS ATTAINED REQUIRED STRENGTH.
   K. ALL ERECTION HARDWARE SHALL BE GALVANIZED.

17. PRECAST UNITS SHALL BE ERECTED WITHOUT EXCEEDING TOLERANCE LIMITS SPECIFIED IN PCI MNL-127.

18. THE FOUNDATION FOR THE PRECAST STRUCTURE IS DESIGNED TO SUPPORT THE COMPLETED SUPERSTRUCTURE. DURING ERECTION OF SUPERSTRUCTURE, THE CONTRACTOR SHALL FURNISH ALL TEMPORARY BRACING AND SUPPORTS AS THE RESULT OF THE CONTRACTOR'S CONSTRUCTION METHODS AND/OR SEQUENCE SO THAT STRUCTURAL INTEGRITY OF THE FOUNDATION IS NOT COMPROMISED.

19. THE STRUCTURE IS DESIGNED TO FUNCTION AS A UNIT UPON COMPLETION. THE CAST-IN PLACE STRUCTURAL MEMBERS INCLUDING THE FOUNDATION SYSTEM THAT RECEIVE OR SUPPORT THE PRECAST ELEMENTS ARE DESIGNED TO SUPPORT ONLY VERTICAL (GRAVITY) LOADS WITH NO ECCENTRICITY. BASED ON THE CONTRACTOR'S CONSTRUCTION METHODS AND/OR SEQUENCE, THE CONTRACTOR SHALL FURNISH AND PROVIDE ALL NECESSARY BRACING AND/OR SUPPORTS.

20. SEE SPECIFICATIONS FOR ADDITIONAL REQUIREMENTS.

DESMAN
Design Management

Olive Street Parking Facility

Olive Street
Greenfield, MA

CONSTRUCTION DOCUMENTS - BID SET

ISSUE

NO.	DESCRIPTION	DATE
1	Addendum 1	06/02/17

Copyright © 2017 DESMAN, Inc. All rights reserved. No part of these documents may be reproduced in any form or by any means without written permission from DESMAN, Inc.

DRAWING TITLE:
GENERAL NOTES

DRAWING NO:
S001

SCALE: 1/16" = 1'-0"
DATE: 09/06/2017
PROJECT NO: 20-16105.01-1

DES.	DRWN.	CHK'D.
WJW	ALL	WTF

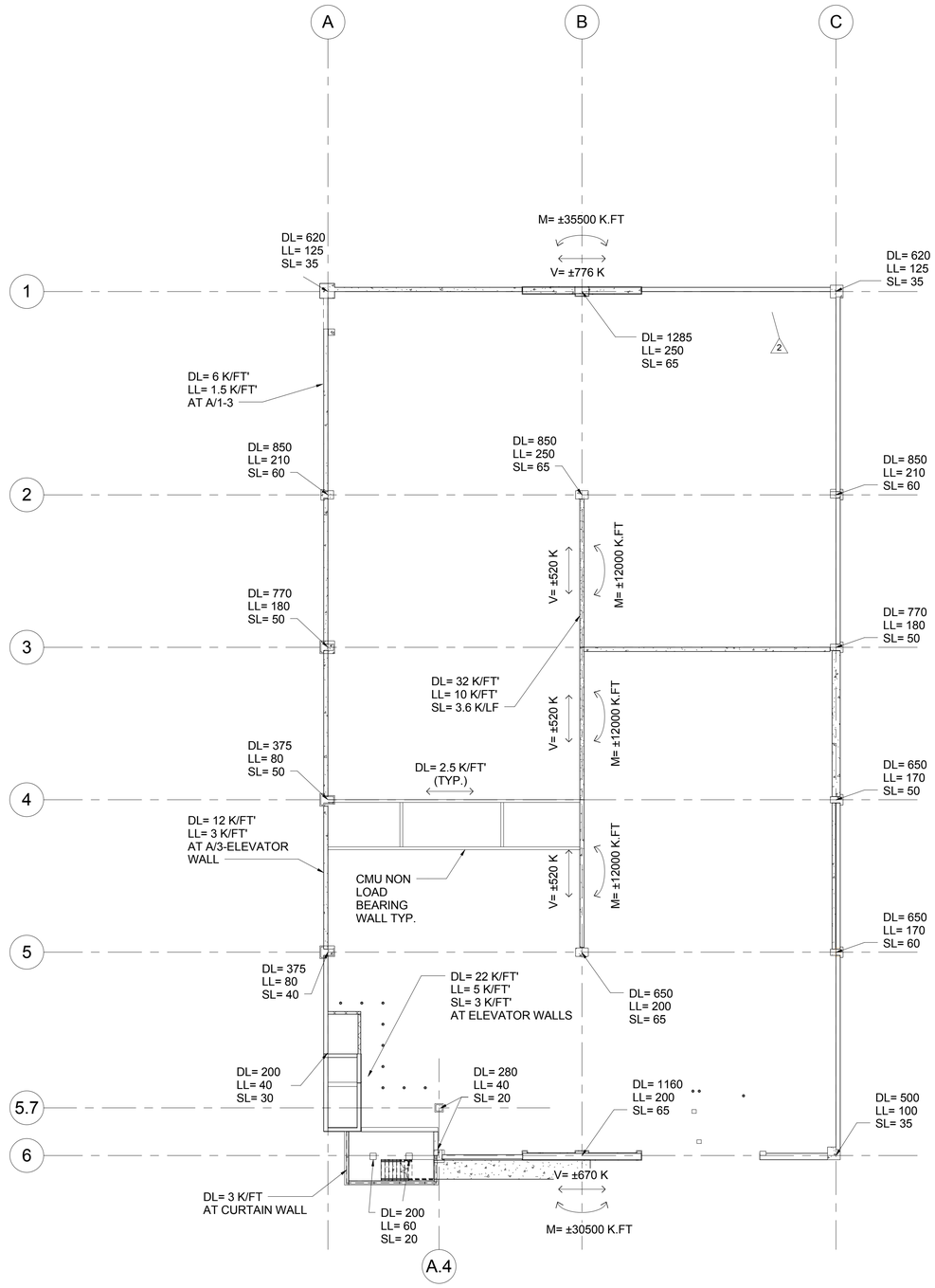

1
S002

Base Shear Diagram

1/16" = 1'-0"

NOTES:
1) FOUNDATION DESIGNED FOR LOADS SHOWN IN KIPS.
2) LOADS ARE AS SHOWN, ARE ALL UNFACTORED.
3) SEISMIC V AND M LOADS ARE BASED ON APPROXIMATE PERIOD.
4) SEISMIC BASE SHEARS V SHOWN ARE AT THE TOP OF FOUNDATION WALLS
5) GRAVITY LOADS INCLUDE FOOTING DEAD LOAD AND FUTURE SOLAR

1

ALL COLUMNS AND GRADE BEAM LOADS UPDATED TO REFLECT DESIGN PROGRESSION

2

3

ALL COLUMN AND SEISMIC LOADS REVISED PER REMOVAL OF ONE FULL LEVEL.

DESMAN
Design Management

Olive Street Parking Facility

Olive Street
Greenfield, MA

CONSTRUCTION DOCUMENTS - BID SET

ISSUE

NO.	DESCRIPTION	DATE
3	100% CD- MOD. 1	08/01/17
2	100% CD	07/10/17
1	Addendum 1	06/02/17

Copyright © 2017 DESMAN, Inc. All rights reserved. No part of these documents may be reproduced in any form or by any means without written permission from DESMAN, Inc.

DRAWING TITLE:
COLUMN LOADS AND BASE SHEAR DIAGRAM

DRAWING NO:
S002

SCALE: 1/16" = 1'-0"
DATE: 09/06/2017
PROJECT NO: 20-16105.01-1

DES.	DRWN.	CHK'D.
WJW	ALL	WJW

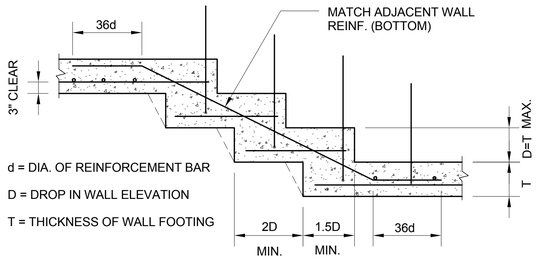

9 / S003 **TYP. STEPPED WALL FOOTING DETAIL**
1" = 10'-0"

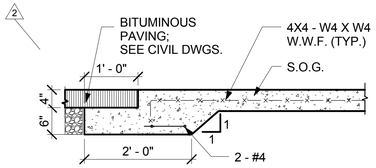

8 / S003 **S.O.G. TRANSITION TO BIT. PAVING**
3/4" = 1'-0"

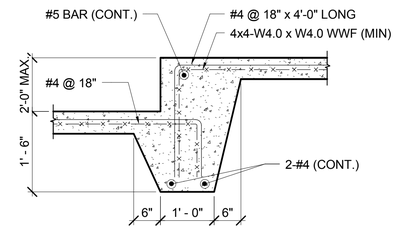

7 / S003 **TYP. DEPRESSED SLAB DETAIL**
3/4" = 1'-0"

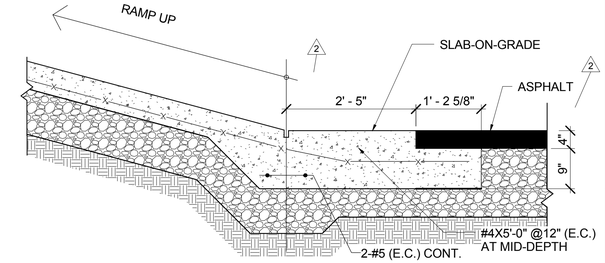

6 / S003 **SECTION AT RAMP**
3/4" = 1'-0"

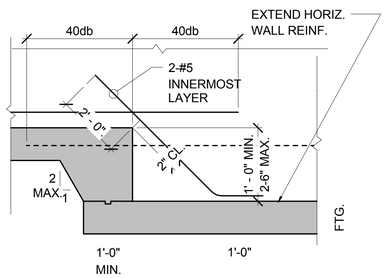

10 / S003 **STEPPED WALL FOOTING DETAIL**
3/4" = 1'-0"

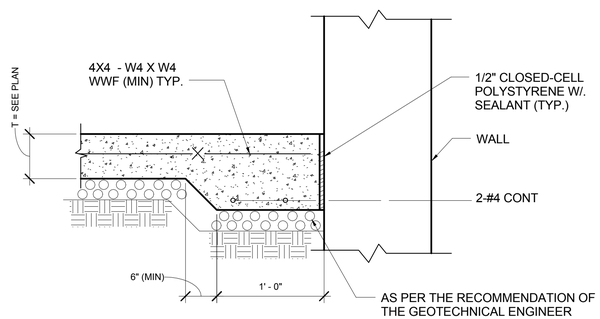

5 / S003 **TYP. EXT. WALL/SLAB ON GRADE SECTION**
1 1/2" = 1'-0"

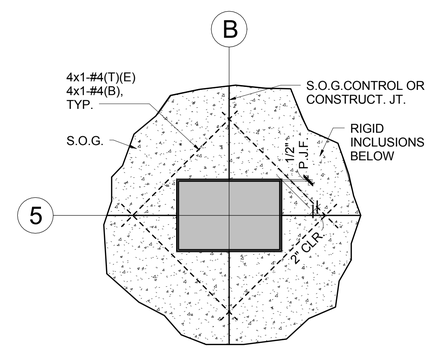

4 / S003 **TYP. INT. COLUMN DTL. AT S.O.G.**
1/2" = 1'-0"

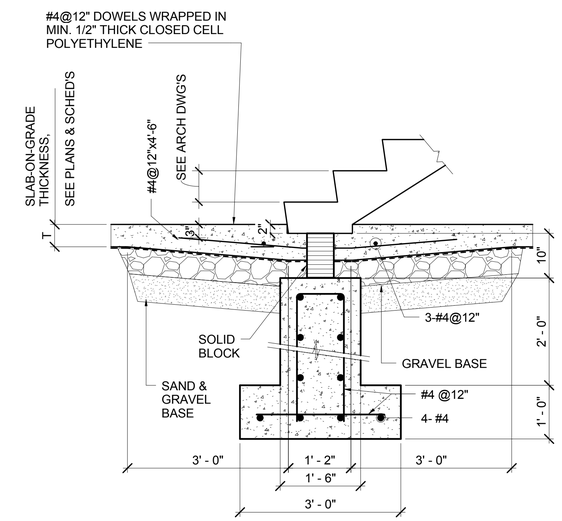

3 / S003 **TYP. STAIR-TO-S.O.G. CONN. DETAIL**
3/4" = 1'-0"

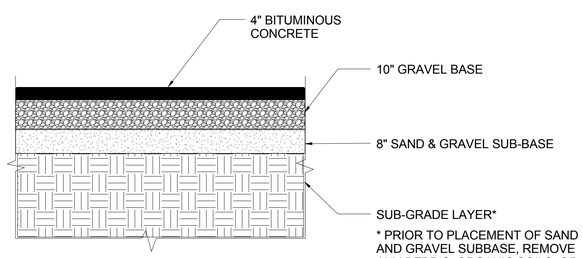

NOTE: SEE CIVIL DRAWINGS & SPECIFICATIONS FOR MATERIAL AND PLACEMENT REQUIREMENTS

* PRIOR TO PLACEMENT OF SAND AND GRAVEL SUBBASE, REMOVE ANY DEBRIS, ORGANIC SOILS, OR OTHER UNSUITABLE SOILS AS DETERMINED BY ENGINEER. PROOF COMPACT SUBGRADE BY A MINIMUM OF 6 PASSES WITH A 6,000 LB VIBRATING ROLLER.

2 / S003 **BITUMINOUS CONCRETE DETAIL**
1/2" = 1'-0"

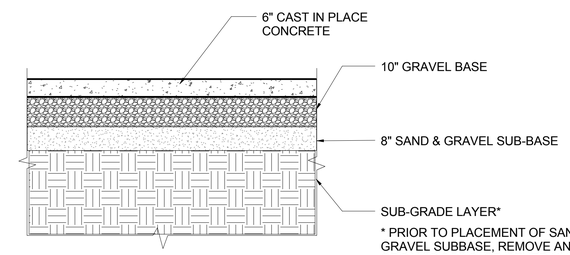

NOTE: SEE CIVIL DRAWINGS & SPECIFICATIONS FOR MATERIAL AND PLACEMENT REQUIREMENTS

* PRIOR TO PLACEMENT OF SAND AND GRAVEL SUBBASE, REMOVE ANY DEBRIS, ORGANIC SOILS, OR OTHER UNSUITABLE SOILS AS DETERMINED BY ENGINEER. PROOF COMPACT SUBGRADE BY A MINIMUM OF 6 PASSES WITH A 6,000 LB VIBRATING ROLLER.

1 / S003 **SLAB ON GRADE DETAIL**
1/2" = 1'-0"

DESMAN Design Management

Olive Street Parking Facility

Olive Street
Greenfield, MA

CONSTRUCTION DOCUMENTS - BID SET

ISSUE

NO.	DESCRIPTION	DATE
2	100% CD	07/10/17
1	Addendum 1	06/02/17

Copyright © 2017 DESMAN, Inc. All rights reserved. No part of these documents may be reproduced in any form or by any means without written permission from DESMAN, Inc.

DRAWING TITLE:
TYPICAL FOUNDATION DETAILS

DRAWING NO:
S003

SCALE: As indicated
DATE: 09/06/2017
PROJECT NO: 20-16105.01-1

DES.	DRWN.	CHK'D.
WJW	ALL	WTF

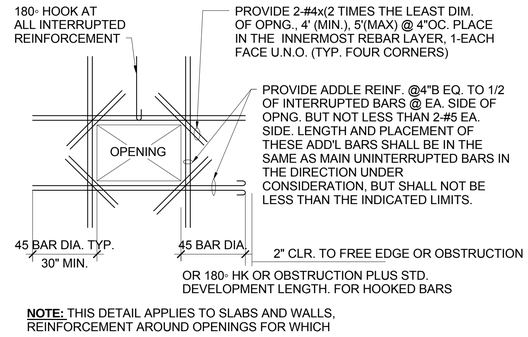

MIN. REINF. AT SLAB OR WALL OPENINGS

8 / S004 — N.T.S.

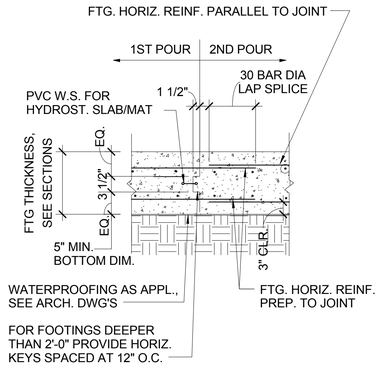

CONT. FOOTING OR MAT CONSTR. JOINT TYP. DETAIL

9 / S004 — N.T.S.

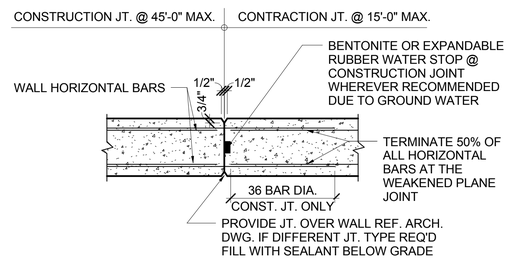

TYP. WALL CONST. & CONTRACTION JOINT

6 / S004 — 1" = 1'-0"

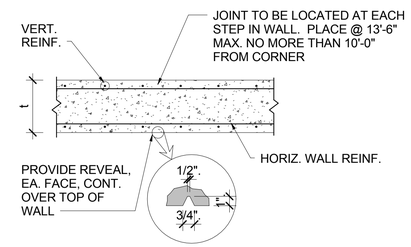

WALL CONTROL JT. DETAIL

7 / S004 — N.T.S.

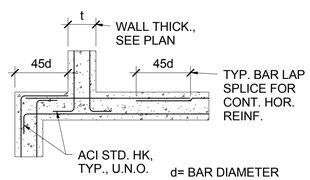

BAR SPLICES IN WALL DOUBLE LAYER TYP.

4 / S004 — N.T.S.

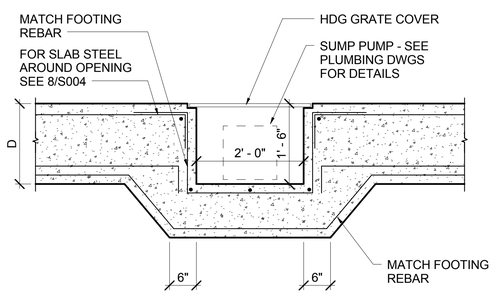

SECTION AT ELEVATOR SUMP PIT

3 / S004 — 3/4" = 1'-0"

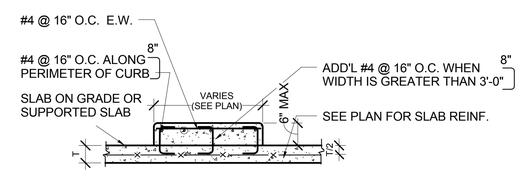

NOTE:
1. USE ONLY WHERE NOT SHOWN OTHERWISE.
2. CURB REINF. APPLICABLE TO SLAB ON GRADE AND SUPPORTED SLAB.

TYP. CURB REINFORCEMENT

1 / S004 — 1/2" = 1'-0"

DESMAN Design Management

Olive Street Parking Facility

Olive Street
Greenfield, MA

CONSTRUCTION DOCUMENTS - BID SET

ISSUE

NO.	DESCRIPTION	DATE
4	Permit Set	08/23/17
1	Addendum 1	06/02/17

Copyright © 2017 DESMAN, Inc. All rights reserved. No part of these documents may be reproduced in any form or by any means without written permission from DESMAN, Inc.

DRAWING TITLE:
TYPICAL FOUNDATION DETAILS

DRAWING NO:
S004

SCALE: As indicated
DATE: 09/06/2017
PROJECT NO: 20-16105.01-1

DES.	DRWN.	CHK'D.
WJW	ALL	WTF

LINTEL NOTES AND SCHEDULE

1. MASONRY LINTELS LISTED FOR THE RANGE OF ROUGH MASONRY OPENING IN THE SCHEDULE BELOW APPLY TO NON-LOAD BEARING WALLS ONLY
2. LINTELS IN MASONRY WALLS SHALL BE PROVIDED FOR ALL OPENINGS AS INDICATED ON THE STRUCTURAL AND ARCHITECTURAL DRAWINGS. IN ADDITION, LINTELS ARE REQUIRED FOR ANY MECHANICAL, ELECTRICAL, OR PLUMBING OPENING IN A MASONRY WALL WITH A WIDTH GREATER THAN 12 INCHES.
3. LINTELS SHALL HAVE A MINIMUM BEARING OF 8" FOR SPANS UP TO 8'-0", AND 16" FOR SPANS GREATER THAN 8'-0". UNLESS NOTED, THEY SHALL BE OF THE SIZES LISTED BELOW.
4. C.M.U. OPENINGS MAY BE SPANNED WITH EITHER A STEEL LINTEL OR MASONRY LINTEL BLOCK, AT THE CONTRACTOR'S OPTION.
5. ALL LINTEL MEMBERS EXCEPT SINGLE ANGLES AND UNLESS NOTED OTHERWISE, SHALL BE CENTERED IN PLAN ON SUPPORTED MASONRY TO MINIMIZE EFFECT OR TORSION.
6. PLATE IN STEEL LINTEL SHALL BE WELDED AT BOTTOM OF RESPECTIVE STEEL SHAPE WITH 1/4" INTERMITTENT FILLET WELDS @ 12" O.C. PROVIDE CONTINUOUS 1/4"X2'-0" WELD ALONG COVER PLATE AT EITHER END ON EACH SIDE OF STEEL LINTEL.
7. PLATE WIDTH SHALL BE 1" LESS THAN THE ACTUAL WIDTH OF MASONRY.

CMU	SPAN	MASONRY LINTEL
4" WALL	4' 4' - 6' 6' - 8'	
6" WALL	4' 4' - 6' 6' - 8'	8" LINTEL BLOCK w/1–#4 8" LINTEL BLOCK w/2–#5 16" LINTEL BLOCK w/2–#5
8" WALL	4' 4' - 6' 6' - 8' 8' - 12'	8" LINTEL BLOCK w/2–#4 16" LINTEL BLOCK w/2–#4 16" LINTEL BLOCK w/2–#5
10" WALL	4' 4' - 6' 6' - 8' 8' - 12'	8" LINTEL BLOCK w/2–#4 16" LINTEL BLOCK w/2–#4 16" LINTEL BLOCK w/2–#5 8"+16" LINTEL BLOCK w/2–#5 EA..
12" WALL	4' 4' - 6' 6' - 8' 8' - 12'	8" LINTEL BLOCK w/2–#4 16" LINTEL BLOCK w/2–#4 16" LINTEL BLOCK w/2–#5 8"+16" LINTEL BLOCK w/2–#5 EA.
CAVITY WALL	8' 8' - 12'	

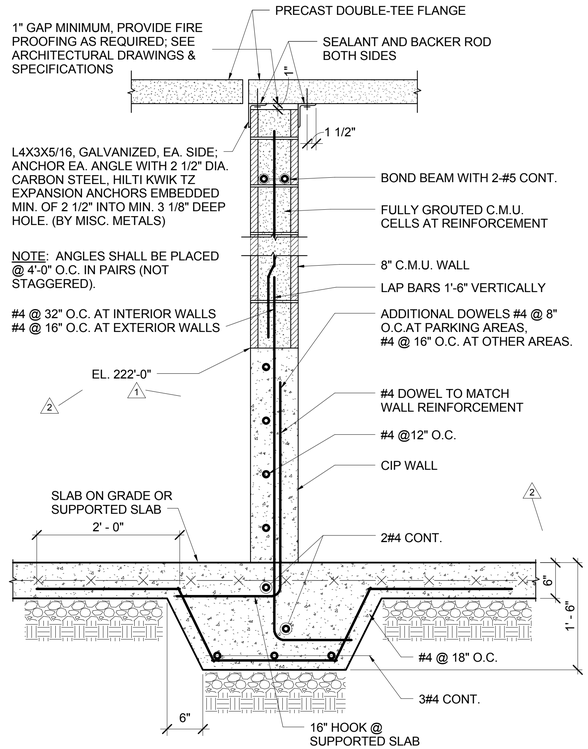

TYP. NON-LOAD BEARING C.M.U. WALL DETAIL

1 / S005 — 1" = 1'-0"

NOTES:

1. MASONRY WALL DOWELS AND VERTICAL REINFORCEMENT ARE ALSO APPLICABLE TO MASONRY WALL ON SUPPORTED FLOOR & MASONRY WALL ON CIP WALL

2. PROVIDE 2-#4 BARS FULL HEIGHT AT EACH SIDE OF OPENING AND AT END OF WALLS.

3. PROVIDE 1" FILLER MATERIAL WITH SEALANT ON BOTH SIDES OF VERTICAL FACES ABUTTING CONCRETE WALLS, COLUMNS OR BEAMS.

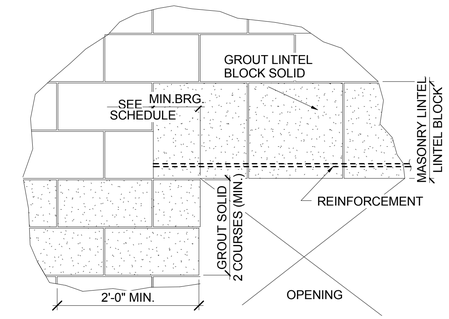

BEARING DETAIL MASONRY LINTEL IN CMU WALL

3 / S005 — 1" = 1'-0"

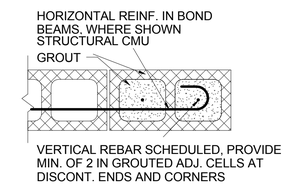

TYP. DETAIL DISCONT. END OF CMU WALL

4 / S005 — 1" = 1'-0"

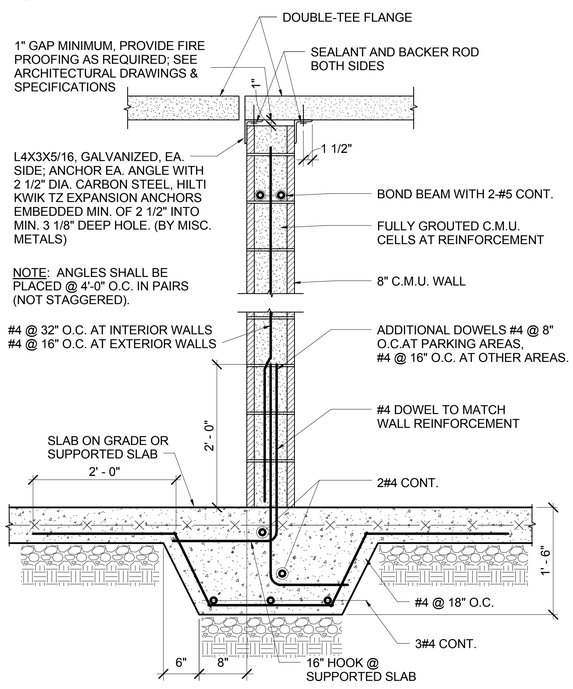

TYP. NON-LOAD BEARING C.M.U. WALL DETAIL2

2 / S005 — 1" = 1'-0"

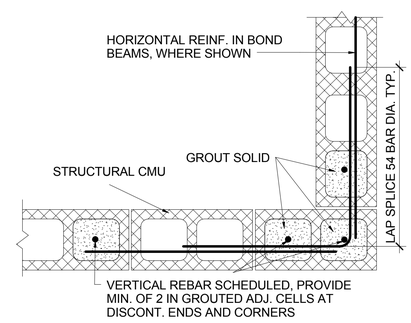

CONT. WALLS CMU WALL CORNER

5 / S005 — 1" = 1'-0"

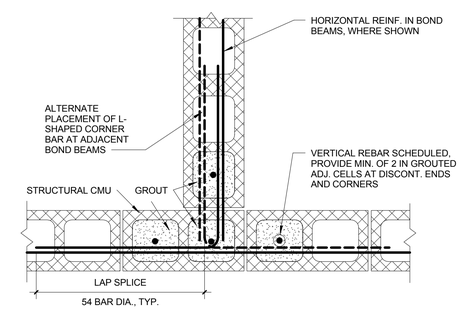

TYPICAL DETAIL CMU WALL INTERSECTION1

6 / S005 — 1" = 1'-0"

DESMAN Design Management

Olive Street Parking Facility

Olive Street
Greenfield, MA

CONSTRUCTION DOCUMENTS - BID SET

ISSUE

NO.	DESCRIPTION	DATE
2	100% CD	07/10/17
1	Addendum 1	06/02/17

Copyright © 2017 DESMAN, Inc. All rights reserved. No part of these documents may be reproduced in any form or by any means without written permission from DESMAN, Inc.

DRAWING TITLE:
TYPICAL MASONRY DETAILS

DRAWING NO:
S005

SCALE: As indicated
DATE: 09/06/2017
PROJECT NO: 20-16105.01-1

DES.	DRWN.	CHK'D.
WJW	ALL	WJW

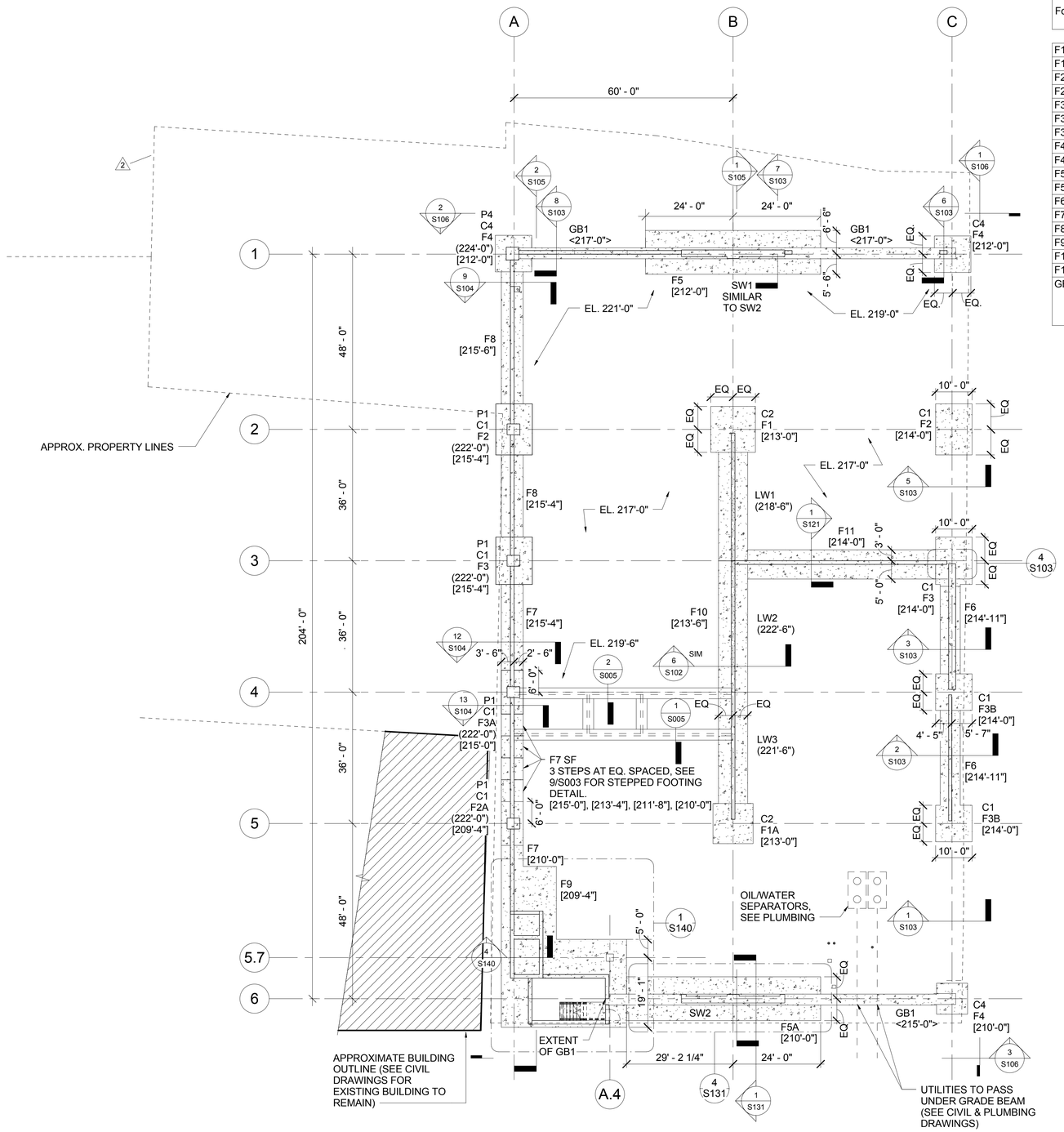

1 S101 **Foundation Plan**
1/16" = 1'-0"

Footing Schedule								
Footing ID	Footing Length	Footing Width	Footing Depth	Bottom Rebar Long Dim.	Bottom Rebar Short Dim.	Top Rebar Long Dim.	Top Rebar Short Dim.	Quantity
F1	12' - 7"	12' - 3"	3' - 0"	12 #10	12 #10			1
F1A	11' - 0"	11' - 0"	2' - 6"	12 #9	12 #9			1
F2	14' - 0"	10' - 0"	3' - 0"	12 #10	14 #10			2
F2A	12' - 0"	6' - 0"	2' - 8"	8 #10	12 #10			1
F3	13' - 0"	10' - 0"	2' - 8"	11 #10	13 #10			2
F3A	12' - 0"	6' - 0"	2' - 8"	8 #10	12 #10			1
F3B	10' - 0"	10' - 0"	2' - 6"	11 #9	11 #9			2
F4	10' - 0"	10' - 0"	5' - 0"	11 #10	11 #10			2
F4A	8' - 6"	8' - 6"	5' - 0"	9 #10	9 #10			1
F5	48' - 0"	12' - 0"	3' - 0"	#11 @ 9"	#11 @ 9"	#9 @ 9"	#9 @ 12"	1
F5A	53' - 2 1/4"	12' - 0"	3' - 0"	#11 @ 9"	#11 @ 9"	#9 @ 9"	#9 @ 12"	1
F6		5' - 6"	1' - 9"	#6 @ 12"	#6 @ 12"	#6 @ 12"	#6 @ 12"	2
F7		6' - 0"	2' - 0"	#6 @ 12"	#6 @ 9"			6
F8		6' - 0"	1' - 6"	#6 @ 12"	#6 @ 12"	#6 @ 12"	#6 @ 12"	2
F9	44' - 1"	34' - 3 3/4"	2' - 8"	#10 @ 12"	#10 @ 12"	#8 @ 12"	#8 @ 12"	1
F10		8' - 0"	2' - 6"	#7 @ 12"	#8 @ 8"	#7 @ 12"	#7 @ 8"	3
F11		8' - 0"	1' - 6"	#5 @ 12"	#6 @ 12"	#5 @ 12"	#6 @ 12"	1
GB1		3' - 0"	5' - 0"	12 #11	2- #5 @ 12"/ 6" AT EDGE OF SHEAR WALL	12 #11	2- #5 @ 12"/ 6" AT EDGE OF SHEAR WALL	2

NOTES:
1. FOOTING DESIGN, BOTTOM OF FOOTING AND TOP OF WALL ELEVATIONS HAVE BEEN UPDATED PER DESIGN PROGRESSION
2. FOUNDATIONS ALONG A-LINE BETWEEN GRIDS 4 TO 6 SHALL BE EXCAVATED, INSTALLED AND BACKFILLED IN PHASES TO LIMIT POTENTIAL EFFECT ON ADJACENT BUILDING. CONTRACTOR SHALL SUBMIT A PROPOSED PHASING PLAN 2 WEEKS IN ADVANCE OF WORK

LEGEND:

1) C#: DENOTES COLUMN TYPE
2) P#: DENOTES PIER TYPE
3) F#: DENOTES FOOTING TYPE
4) GB#: DENOTES GRADE BEAM TYPE
GB-1 = 3'-0" WIDE x 5'-0" THICK
5) (XXX.XX'): DENOTES TOP OF PIER / CAST-IN-PLACE WALL ELEVATIONS
6) [XXX.XX']: DENOTES BOTTOM OF FOOTING OR PILE CAP ELEVATION
7) <XXX.XX'>: DENOTES TOP OF THE TIE BEAM OR GRADE BEAM ELEVATION
8) : DENOTES SHEAR WALL
9) : DENOTES PRECAST COLUMNS ABOVE CAST-IN-PLACE WALL ELEVATIONS
10) REFER TO DRAWING S102 FOR VARIOUS PIER PLAN DETAILS
11) REFER TO DRAWING S102 FOR VARIOUS COLUMN TYPE DETAILS
12) SW-X: DENOTES PRECAST SHEAR WALL ABOVE
13) LW-X: DENOTES PRECAST LITE WALL ABOVE
14) PROVIDE BITUMINOUS CONCRETE OR CIP SLAB ON GRADE AS SHOWN ON S-201
15) SPREAD FOOTING DESIGN IS BASED ON A NET ALLOWABLE SOIL BEARING AFTER GROUND IMPROVEMENT = 9000 KSF
16) SF = STEPPED FOOTING

DESMAN Design Management

Olive Street Parking Facility

Olive Street
Greenfield, MA

CONSTRUCTION DOCUMENTS - BID SET

ISSUE

NO.	DESCRIPTION	DATE
5	CD - Bid Set	09/06/17
4	Permit Set	08/23/17
2	100% CD	07/10/17
1	Addendum 1	06/02/17

Copyright © 2017 DESMAN, Inc. All rights reserved. No part of these documents may be reproduced in any form or by any means without written permission from DESMAN, Inc.

DRAWING TITLE:
FOUNDATION PLAN

DRAWING NO:
S101

SCALE: 1/16" = 1'-0"
DATE: 09/06/2017
PROJECT NO: 20-16105.01-1

DES.	DRWN.	CHK'D.
WJW	ALL	WJW

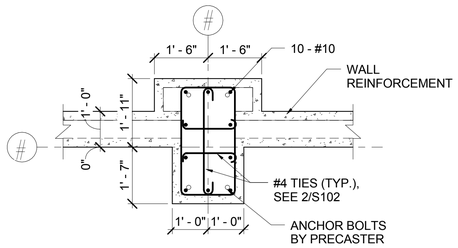

TYPE P1

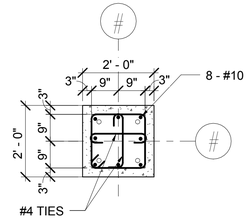

TYPE P3

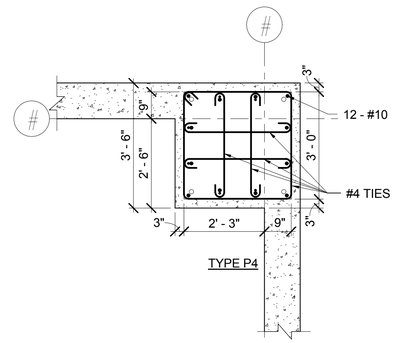

TYPE P4

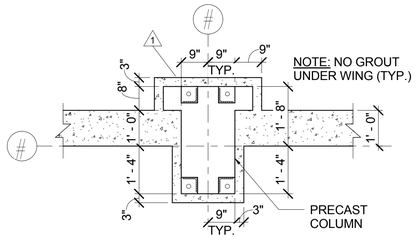

TYPE C1

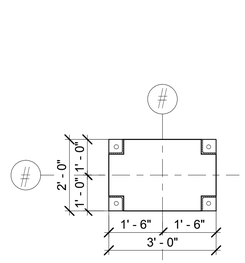

TYPE C2

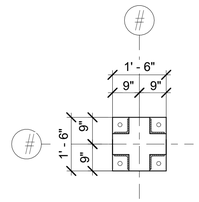

TYPE C3

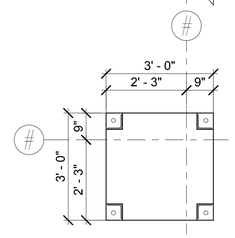

TYPE C4

1 S102 PIERS AND COLUMNS DETAILS

1/2" = 1'-0"

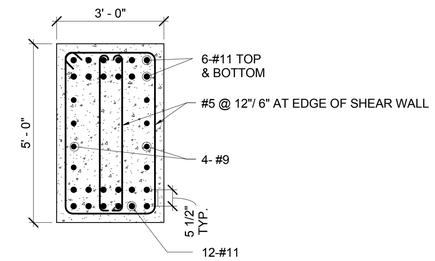

GB-1

4 S102 GRADE BEAM REINFORCING DETAIL

1/2" = 1'-0"

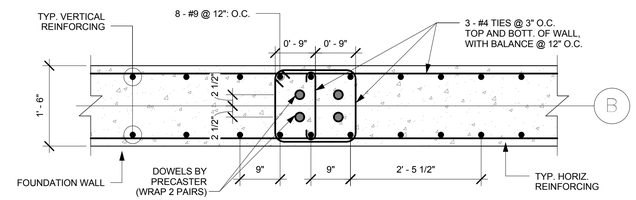

5 S102 LITEWALL DETAIL

3/4" = 1'-0"

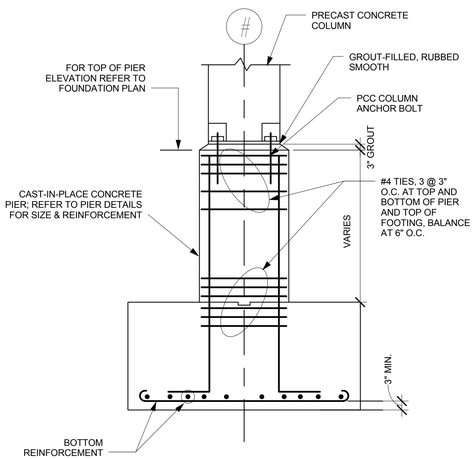

2 S102 PIER DETAIL

1/2" = 1'-0"

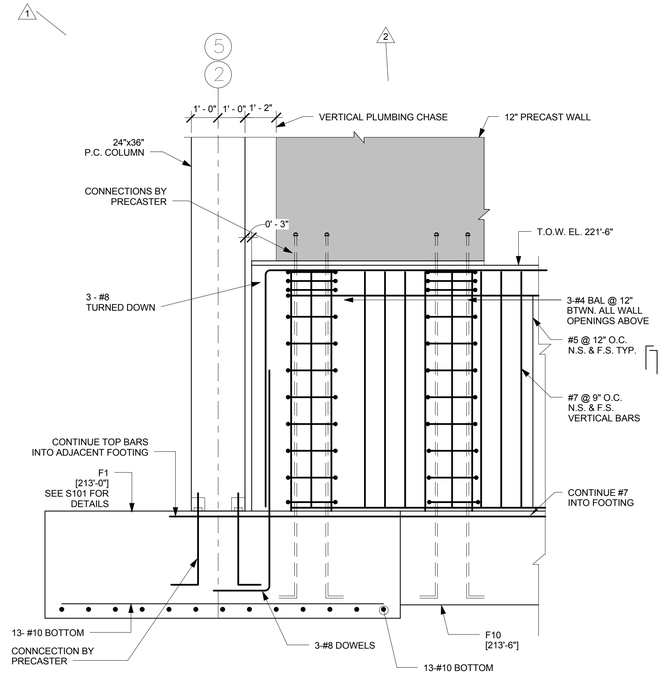

3 S102 LITEWALL ELEVATION

3/8" = 1'-0"

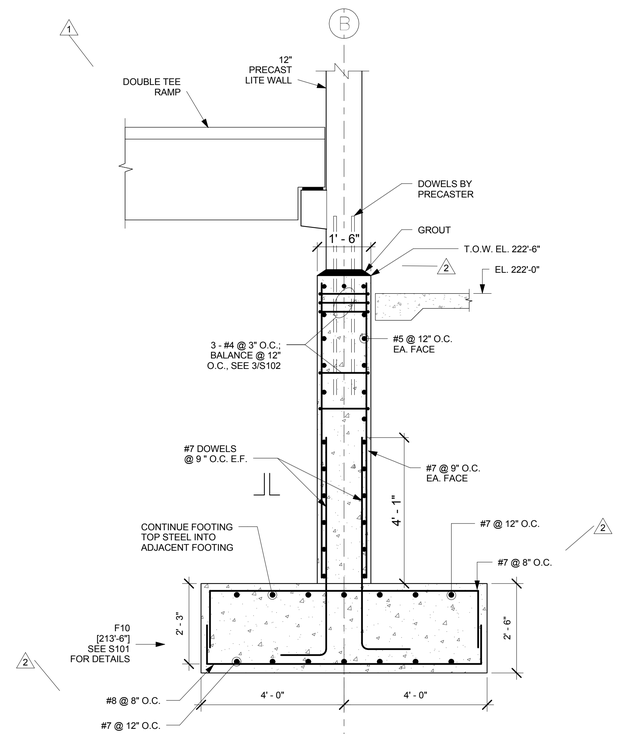

6 S102 SECTION AT LITEWALL

1/2" = 1'-0"

DESMAN Design Management

Olive Street Parking Facility

Olive Street
Greenfield, MA

CONSTRUCTION DOCUMENTS - BID SET

ISSUE

NO.	DESCRIPTION	DATE
2	100% CD	07/10/17
1	Addendum 1	06/02/17

Copyright © 2017 DESMAN, Inc. All rights reserved. No part of these documents may be reproduced in any form or by any means without written permission from DESMAN, Inc.

DRAWING TITLE:
FOUNDATION SECTIONS

DRAWING NO:
S102

SCALE: As indicated
DATE: 09/06/2017
PROJECT NO: 20-16105.01-1

DES.	DRWN.	CHK'D.
WJW	ALL	WJW

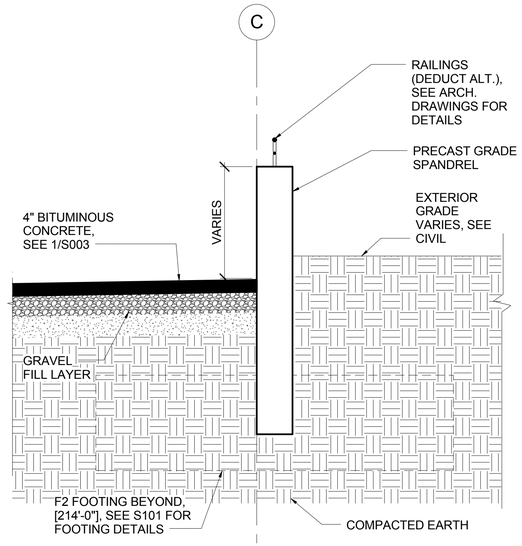

1 S103 **Foundation Section C/5-6**
1/2" = 1'-0"

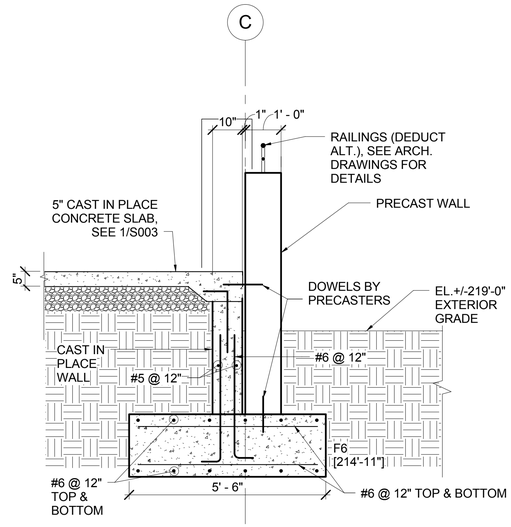

2 S103 **Foundation Section C/4-5**
1/2" = 1'-0"

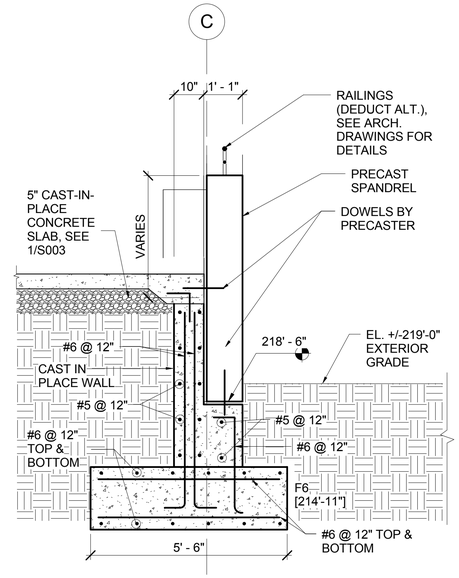

3 S103 **Foundation Section C/3-4**
1/2" = 1'-0"

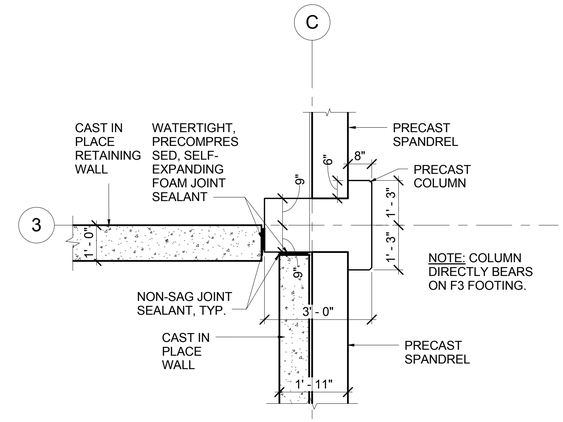

4 S103 **Foundation Plan at C3**
1/2" = 1'-0"

NOTE: REFER TO CIVIL DRAWINGS FOR ACTUAL GRADE ELEVATIONS.

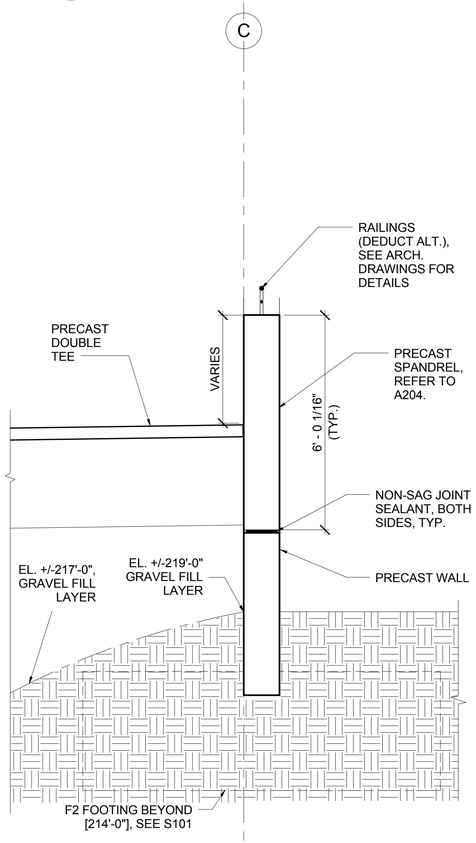

5 S103 **Foundation Section C/1-3**
1/2" = 1'-0"

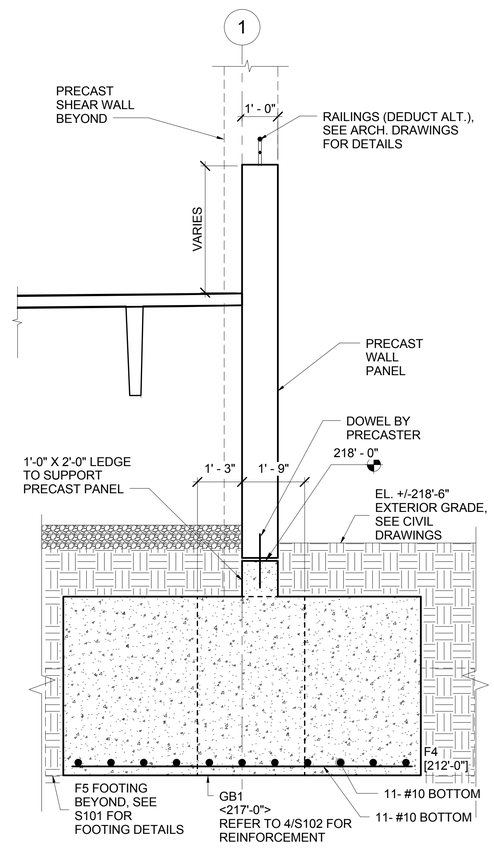

6 S103 **Foundation Section B1-C1**
1/2" = 1'-0"

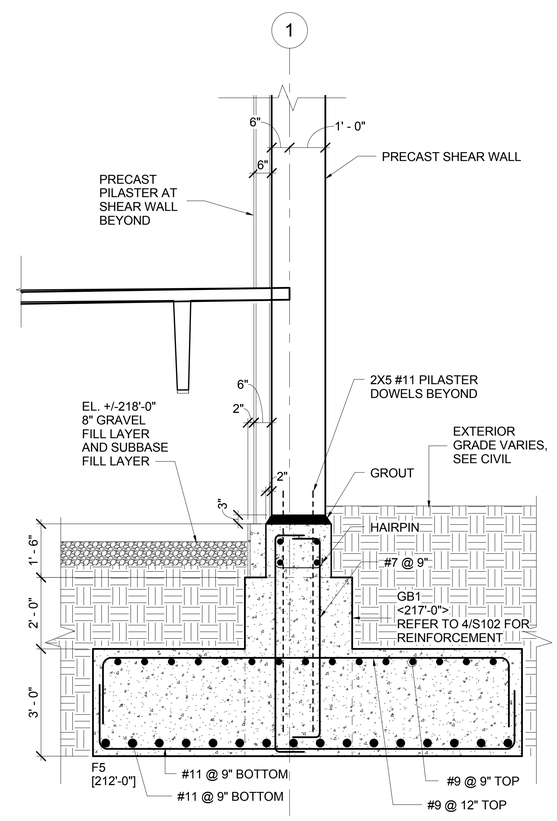

7 S103 **Foundation Section SW2**
1/2" = 1'-0"

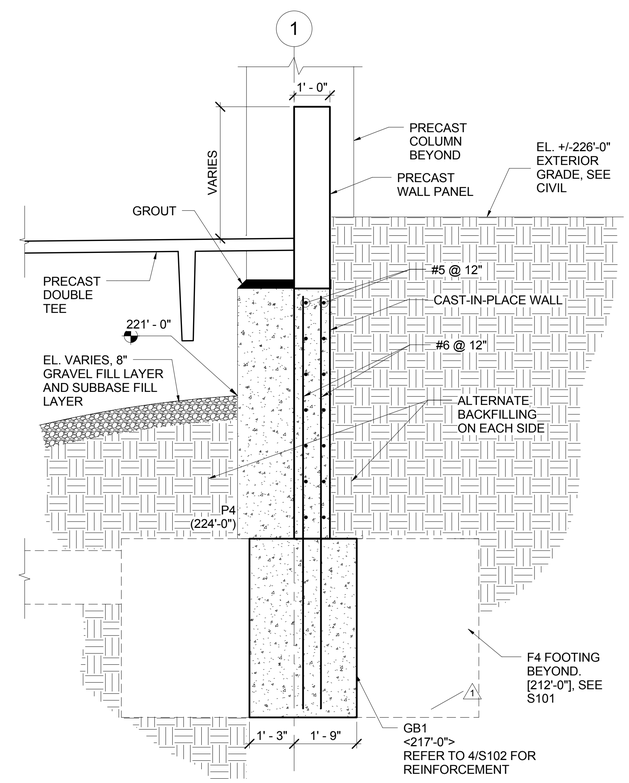

8 S103 **Foundation Section 1/A-B**
1/2" = 1'-0"

DESMAN Design Management

Olive Street Parking Facility

Olive Street
Greenfield, MA

CONSTRUCTION DOCUMENTS - BID SET

ISSUE

NO.	DESCRIPTION	DATE
2	100% CD	07/10/17
1	Addendum 1	06/02/17

Copyright © 2017 DESMAN, Inc. All rights reserved. No part of these documents may be reproduced in any form or by any means without written permission from DESMAN, Inc.

DRAWING TITLE:
FOUNDATION SECTIONS

DRAWING NO:
S103

SCALE: 1/2" = 1'-0"
DATE: 09/06/2017
PROJECT NO: 20-16105.01-1

DES.	DRWN.	CHK'D.
WJW	ALL	WJW

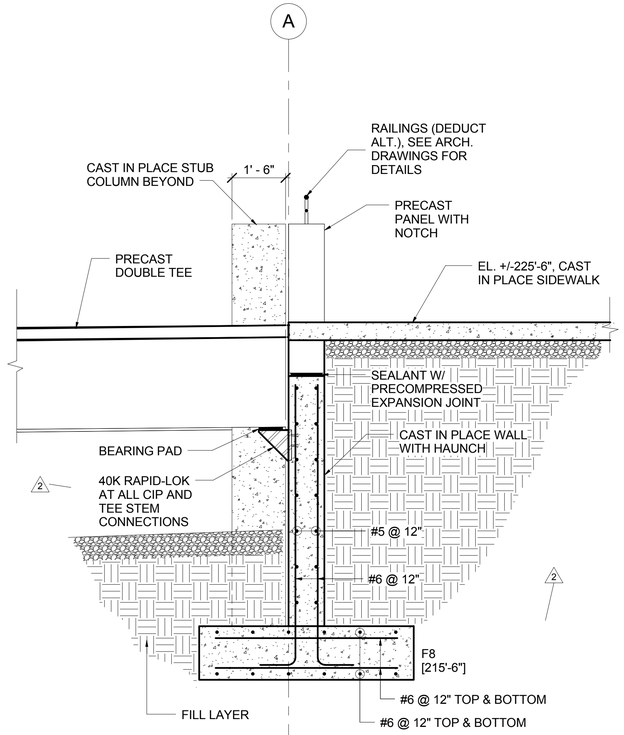

9 S104 **Foundation Section A/1-2 at North Stair**
1/2" = 1'-0"

NOTE: REFER TO CIVIL DRAWINGS FOR ACTUAL GRADE ELEVATIONS.

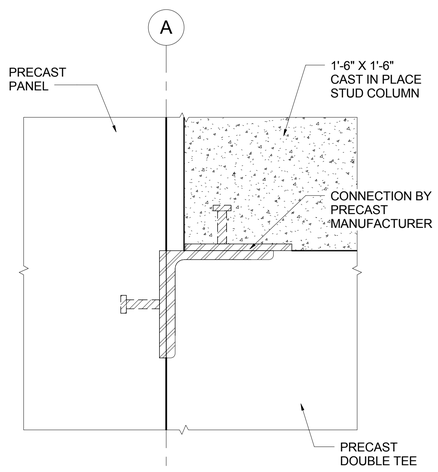

10 S104 **Precast Connection by Precast Manufacturer**
3" = 1'-0"

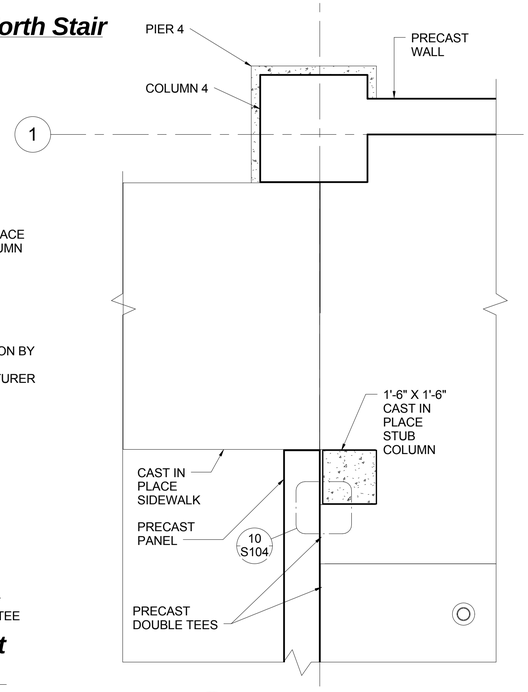

11 S104 **Plan at North Stair**
1/2" = 1'-0"

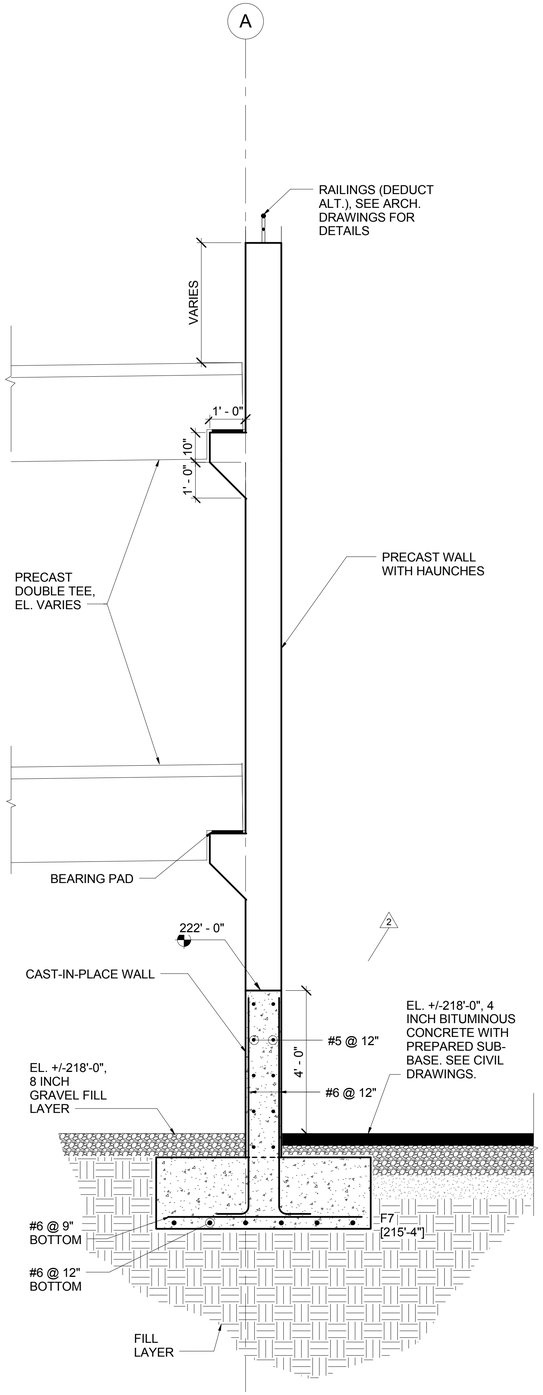

12 S104 **Foundation Section A/3-4**
1/2" = 1'-0"

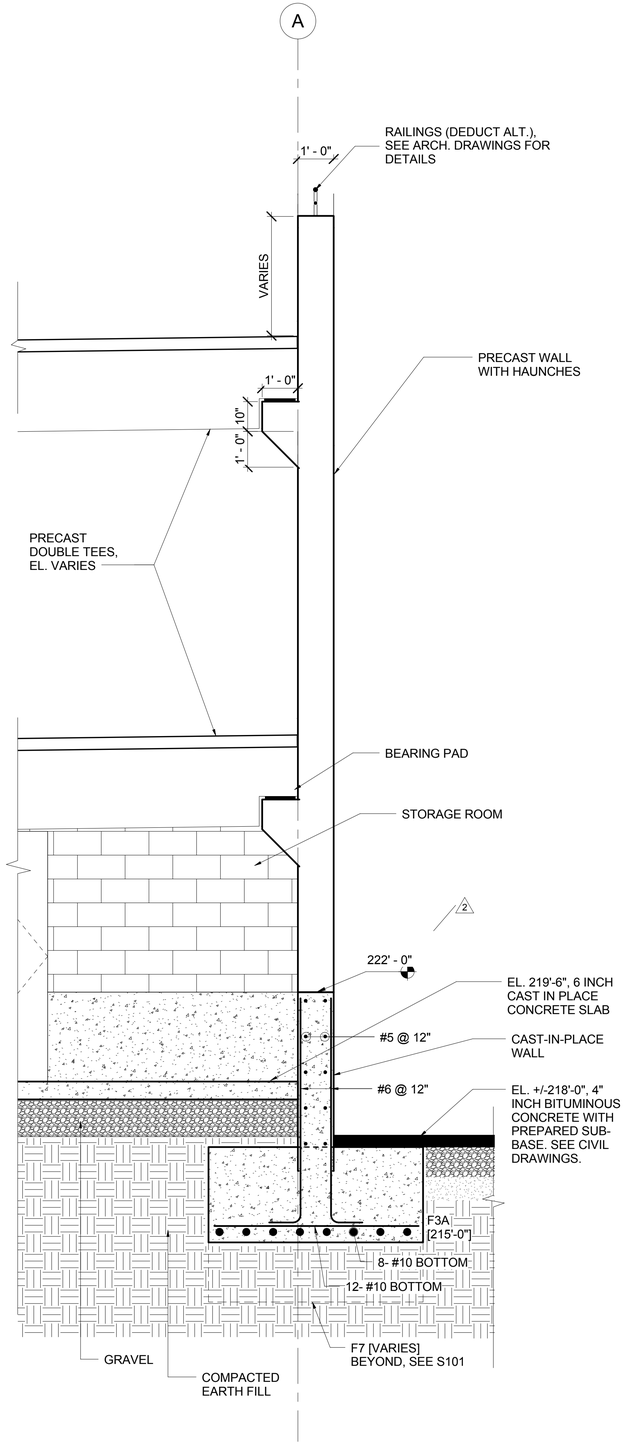

13 S104 **Foundation Section along A-4 at Storage Room**
1/2" = 1'-0"

DESMAN Design Management

Olive Street Parking Facility

Olive Street
Greenfield, MA

CONSTRUCTION DOCUMENTS - BID SET

ISSUE

NO.	DESCRIPTION	DATE
2	100% CD	07/10/17
1	Addendum 1	06/02/17

Copyright © 2017 DESMAN, Inc. All rights reserved. No part of these documents may be reproduced in any form or by any means without written permission from DESMAN, Inc.

DRAWING TITLE:
FOUNDATION SECTIONS

DRAWING NO:
S104

SCALE: As indicated
DATE: 09/06/2017
PROJECT NO: 20-16105.01-1

DES.	DRWN.	CHK'D.
WJW	ALL	WJW

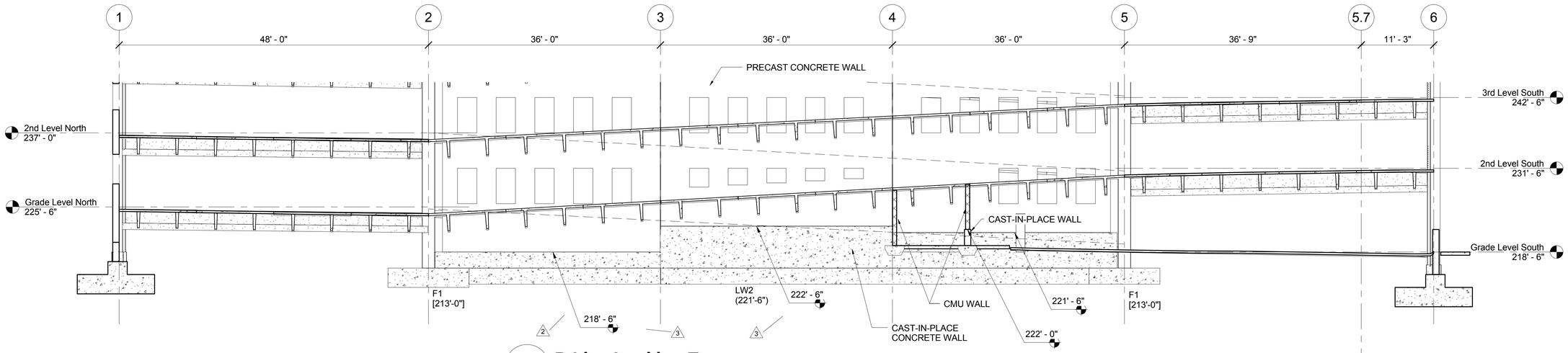

1 / S105 **B Line Looking East**
1/8" = 1'-0"

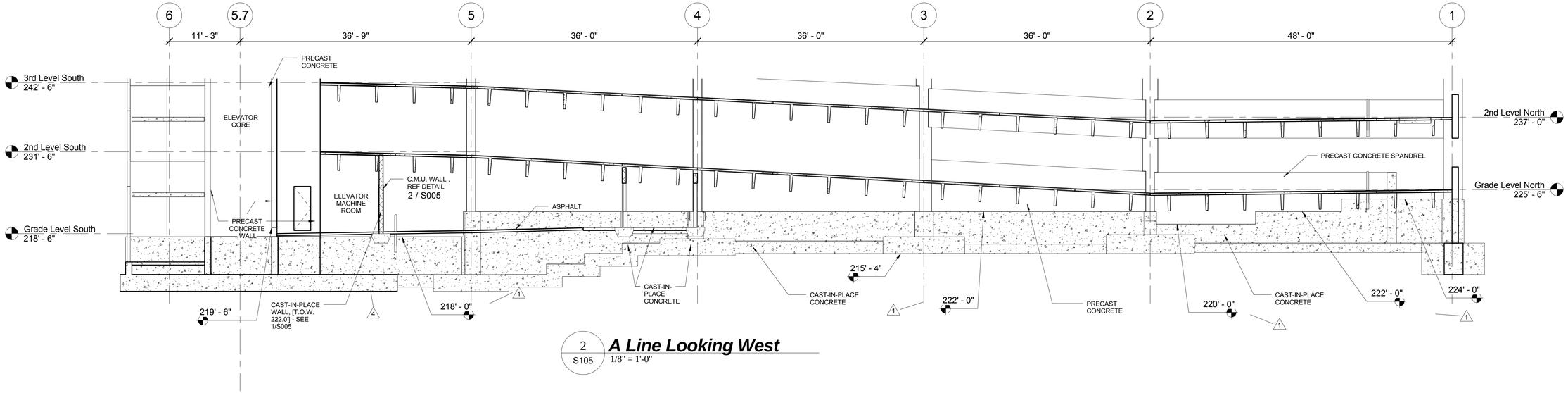

2 / S105 **A Line Looking West**
1/8" = 1'-0"

DESMAN
Design Management

Olive Street Parking Facility

Olive Street
Greenfield, MA

CONSTRUCTION DOCUMENTS - BID SET

ISSUE

NO.	DESCRIPTION	DATE
4	Permit Set	08/23/17
3	100% CD- MOD. 1	08/01/17
2	100% CD	07/10/17
1	Addendum 1	06/02/17

Copyright © 2017 DESMAN, Inc. All rights reserved. No part of these documents may be reproduced in any form or by any means without written permission from DESMAN, Inc.

DRAWING TITLE:
FOUNDATION ELEVATIONS

DRAWING NO:
S105

SCALE: 1/8" = 1'-0"
DATE: 09/06/2017
PROJECT NO: 20-16105.01-1

DES.	DRWN.	CHK'D.
WJW	ALL	WJW

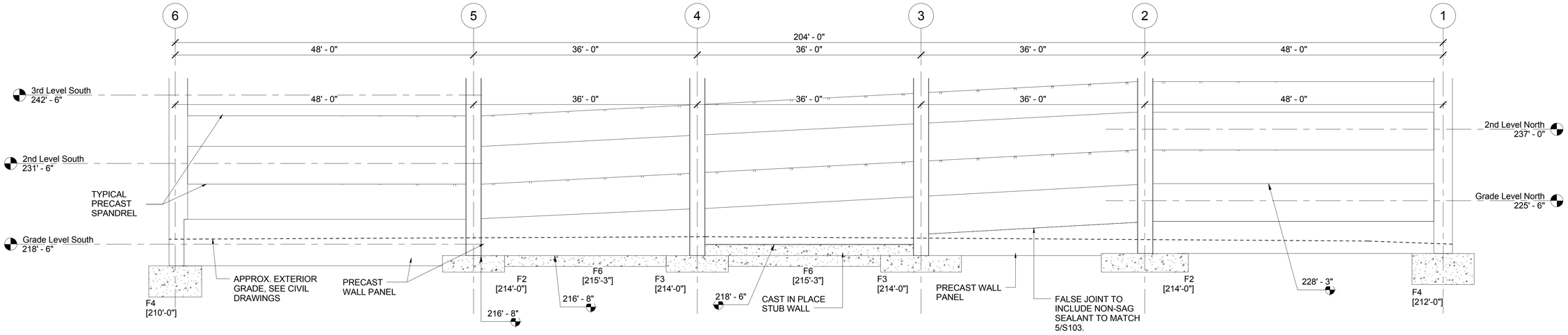

1 S106 **Foundation Elevation C Line Looking West**
1/8" = 1'-0"

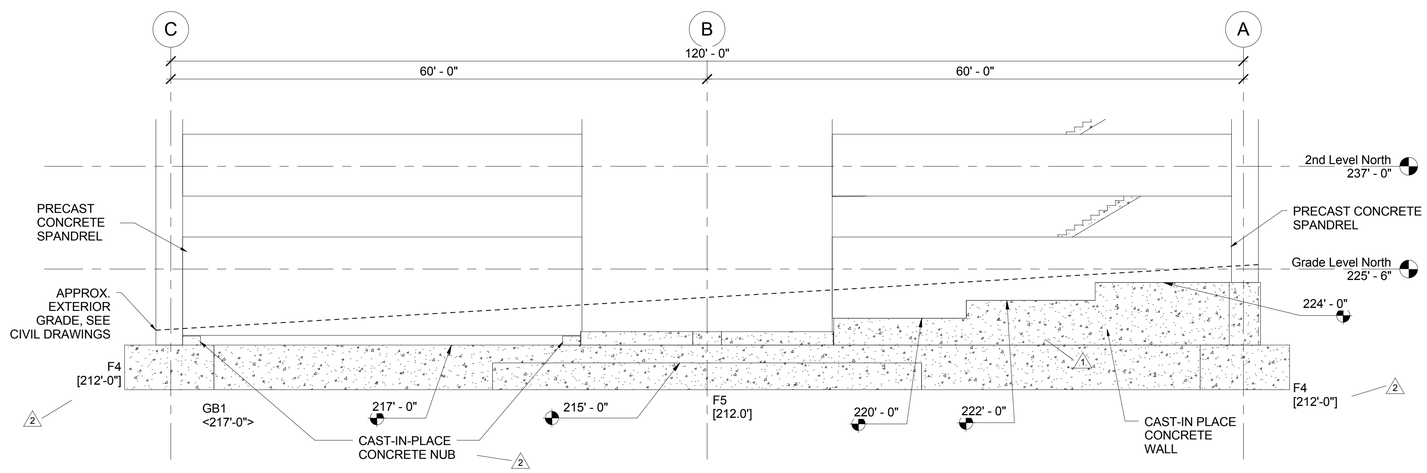

2 S106 **Foundation Elevation 1 Line Looking South**
1/8" = 1'-0"

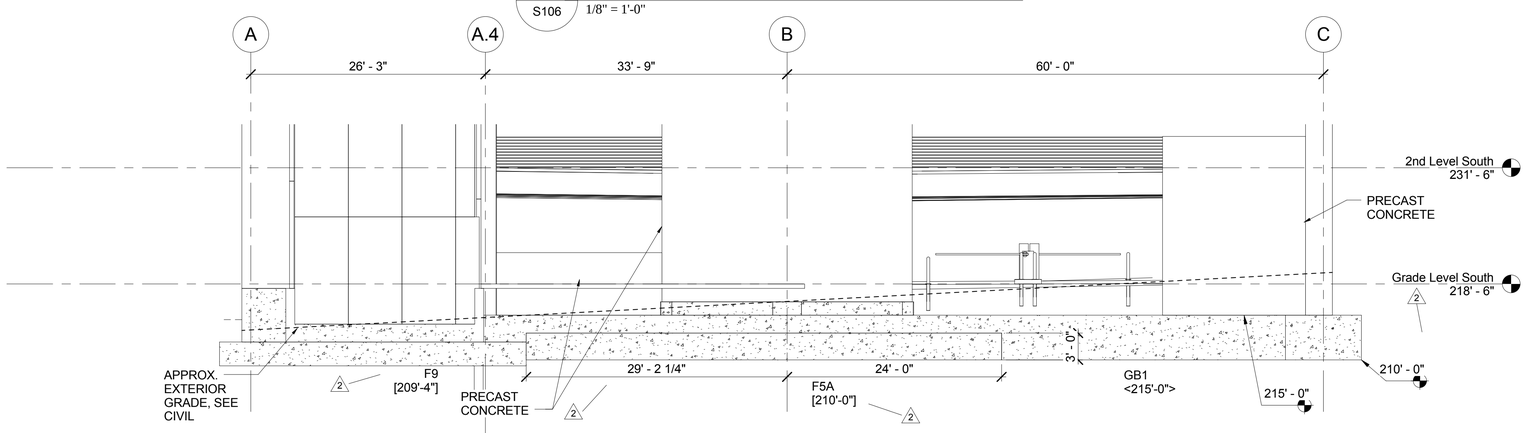

3 S106 **6 Line Looking North**
1/8" = 1'-0"

DESMAN
Design Management

Olive Street Parking Facility

Olive Street
Greenfield, MA

CONSTRUCTION DOCUMENTS - BID SET

ISSUE

NO.	DESCRIPTION	DATE
2	100% CD	07/10/17
1	Addendum 1	06/02/17

Copyright © 2017 DESMAN, Inc. All rights reserved. No part of these documents may be reproduced in any form or by any means without written permission from DESMAN, Inc.

DRAWING TITLE:
FOUNDATION ELEVATIONS

DRAWING NO:
S106

SCALE: 1/8" = 1'-0"
DATE: 09/06/2017
PROJECT NO: 20-16105.01-1

DES.	DRWN.	CHK'D.
WJW	ALL	WJW

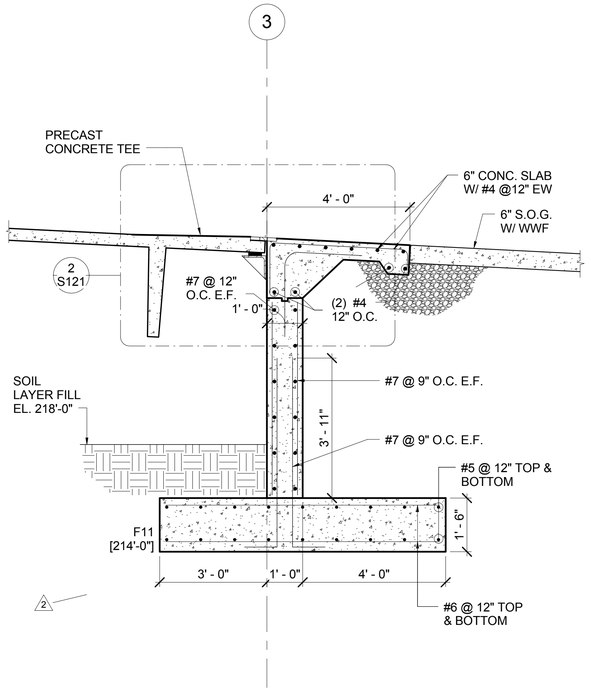

1 S121 **Section at Jump Wall**
1/2" = 1'-0"

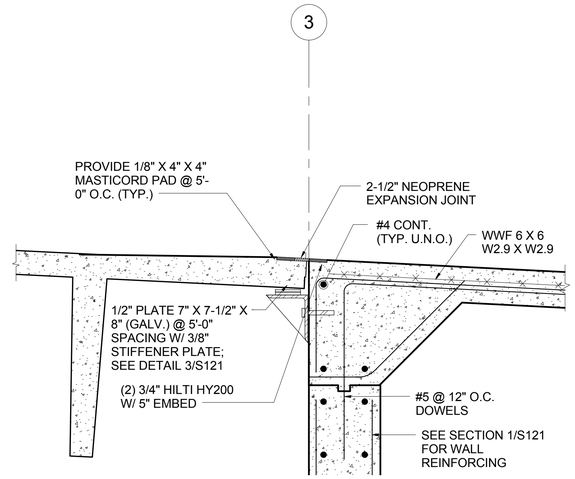

2 S121 **Detail at Jump Wall**
1" = 1'-0"

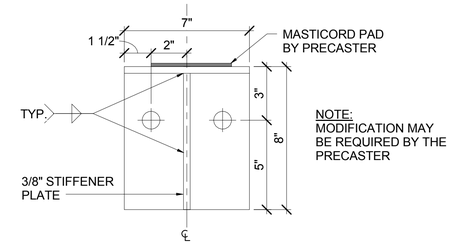

NOTE:
MODIFICATION MAY
BE REQUIRED BY THE
PRECASTER

3 S121 **Bent Plate Detail**
3" = 1'-0"

DESMAN
Design Management

Olive Street Parking Facility

Olive Street
Greenfield, MA

CONSTRUCTION DOCUMENTS - BID SET

ISSUE

NO.	DESCRIPTION	DATE
2	100% CD	07/10/17
1	Addendum 1	06/02/17

Copyright © 2017 DESMAN, Inc. All rights reserved. No part of these documents may be reproduced in any form or by any means without written permission from DESMAN, Inc.

DRAWING TITLE:
JUMP WALL DETAILS

1

DRAWING NO:
S121

SCALE: As indicated
DATE: 09/06/2017
PROJECT NO: 20-16105.01-1

DES.	DRWN.	CHK'D.
WJW	ALL	WTF

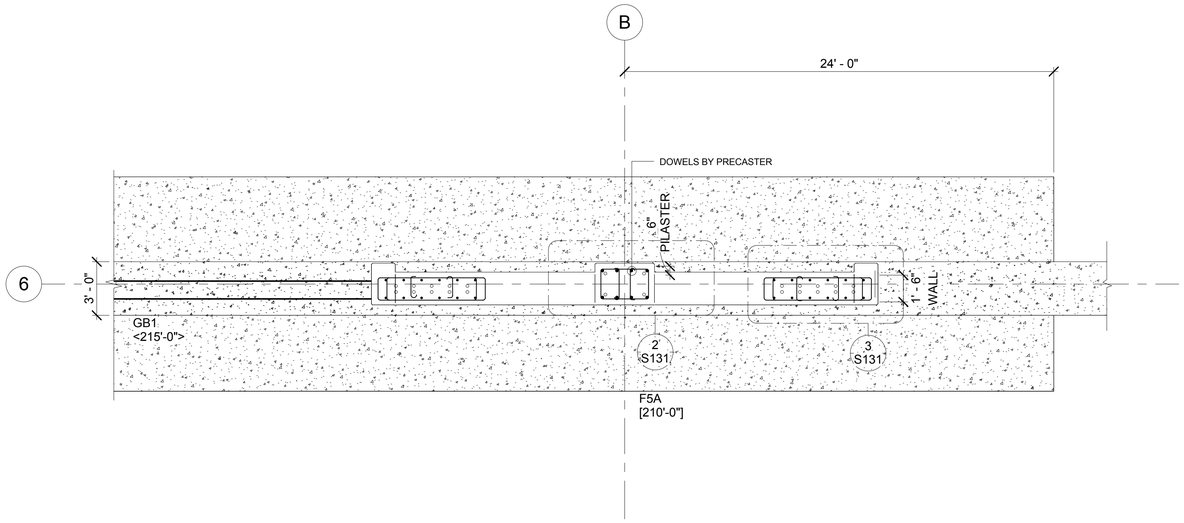

4 S131 **Foundation Plan at SW-2**
1/4" = 1'-0"

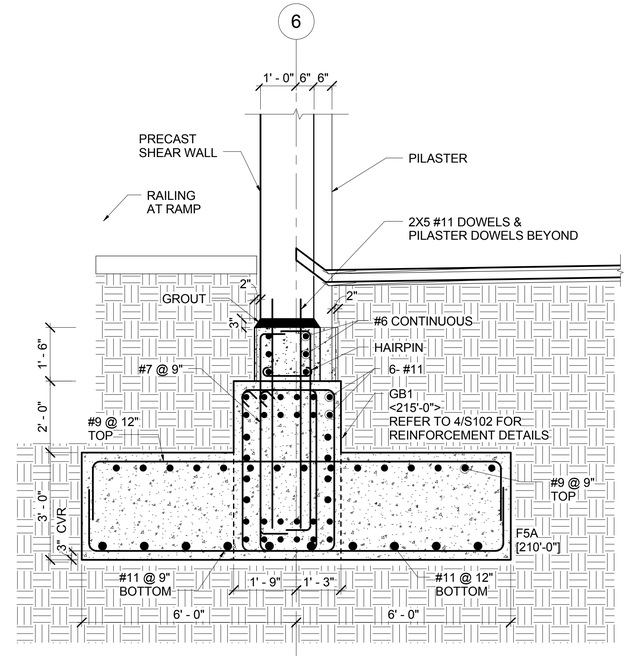

1 S131 **Section at SW-2**
1/2" = 1'-0"

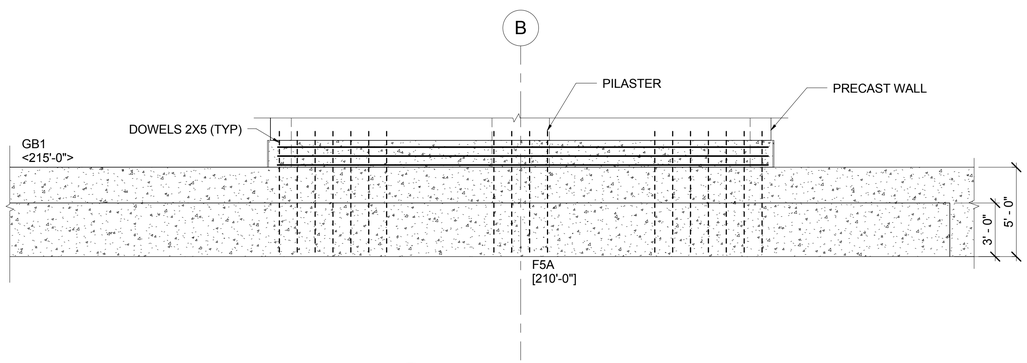

5 S131 **SW-2 Elevation**
1/4" = 1'-0"

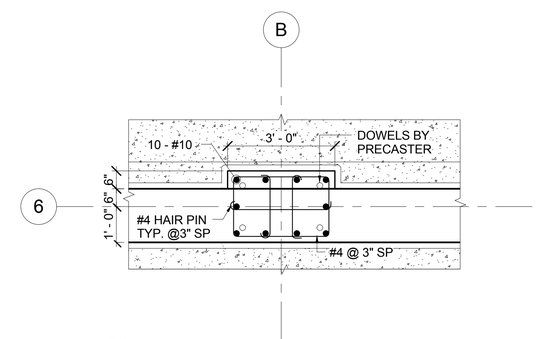

2 S131 **Plan at Shear Wall and Pilaster**
1/2" = 1'-0"

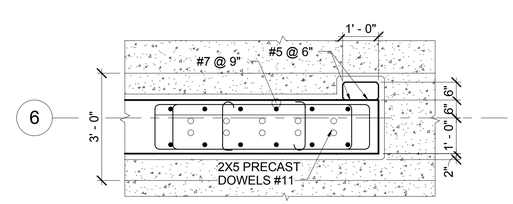

3 S131 **Plan at Edge of Shear Wall**
1/2" = 1'-0"

DESMAN
Design Management

Olive Street Parking Facility

Olive Street
Greenfield, MA

CONSTRUCTION DOCUMENTS - BID SET

ISSUE

NO.	DESCRIPTION	DATE
2	100% CD	07/10/17

Copyright © 2017 DESMAN, Inc. All rights reserved. No part of these documents may be reproduced in any form or by any means without written permission from DESMAN, Inc.

DRAWING TITLE:
SHEAR WALL SECTIONS AND DETAILS

DRAWING NO:
S131

SCALE: As indicated
DATE: 09/06/2017
PROJECT NO: 20-16105.01-1

DES.	DRWN.	CHK'D.
WJW	ALL	WJW

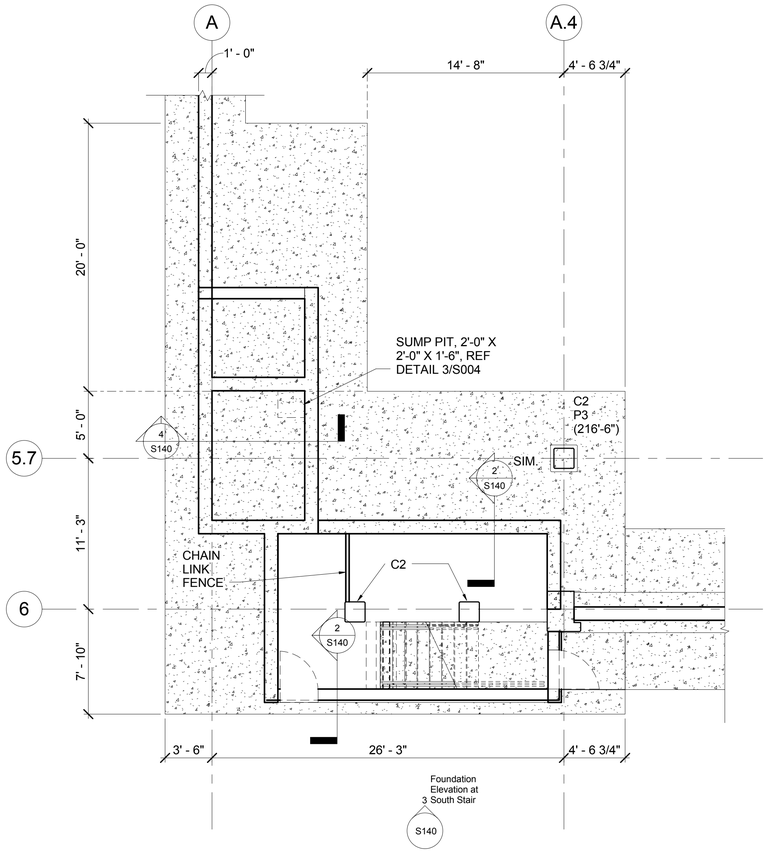

1 S140 **Foundation Plan at South Stair**
3/16" = 1'-0"

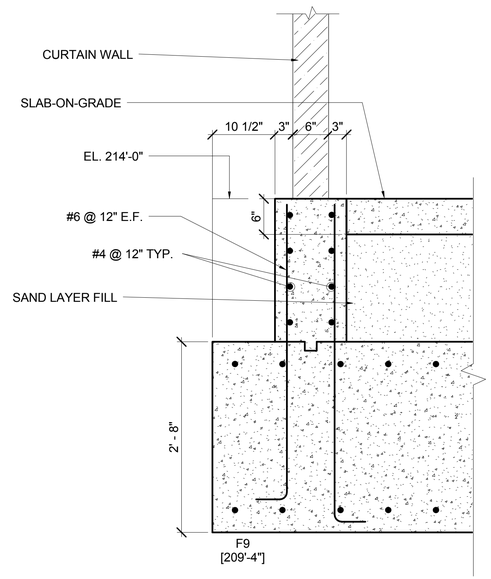

2 S140 **Section at South Stair**
1" = 1'-0"

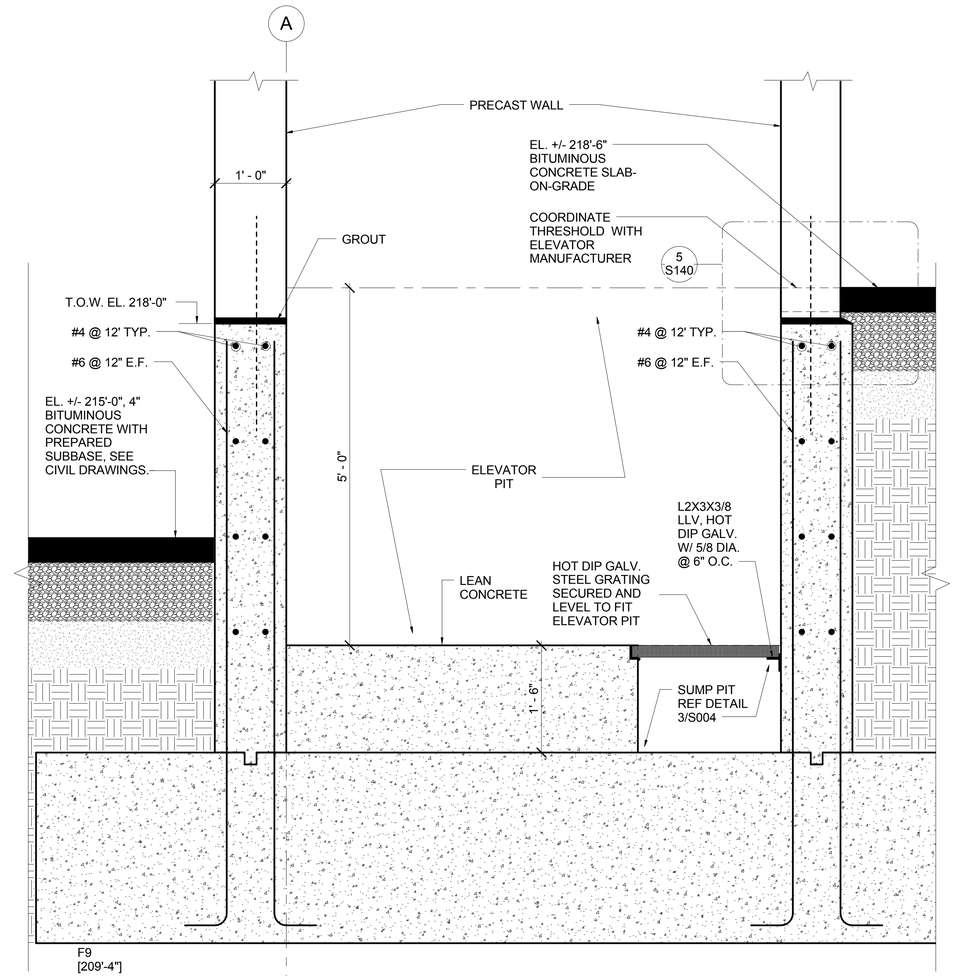

4 S140 **Section at Elevator Pit**
1" = 1'-0"

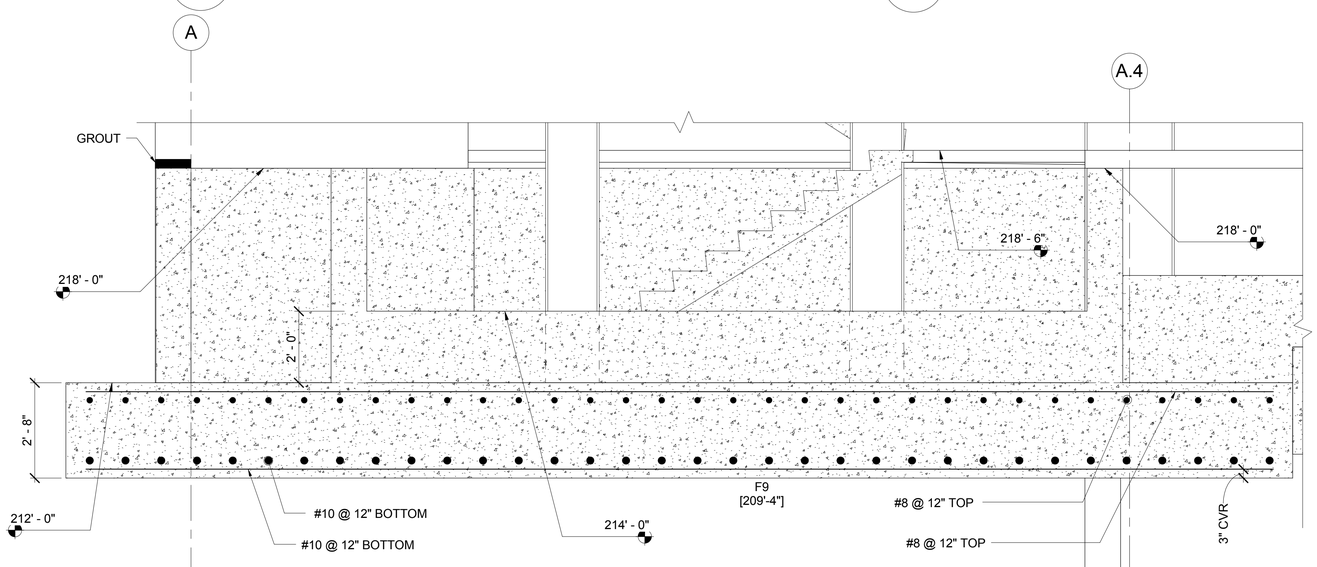

3 S140 **Foundation Elevation at South Stair**
1/2" = 1'-0"

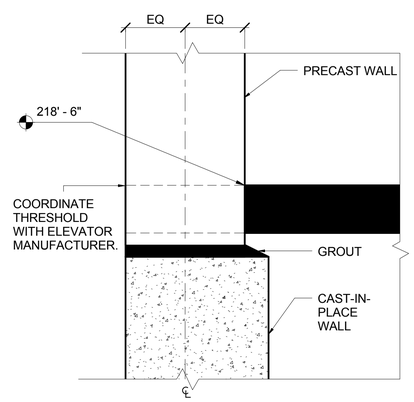

5 S140 **Section at Elevator Threshold**
1 : 6

DESMAN
Design Management

Olive Street Parking Facility

Olive Street
Greenfield, MA

CONSTRUCTION DOCUMENTS - BID SET

ISSUE

NO.	DESCRIPTION	DATE
2	100% CD	07/10/17

Copyright © 2017 DESMAN, Inc. All rights reserved. No part of these documents may be reproduced in any form or by any means without written permission from DESMAN, Inc.

DRAWING TITLE:
SOUTH STAIR DETAILS

2

DRAWING NO:
S140

SCALE: As indicated
DATE: 09/06/2017
PROJECT NO: 20-16105.01-1

DES.	DRWN.	CHK'D.
WJW	ALL	WJW

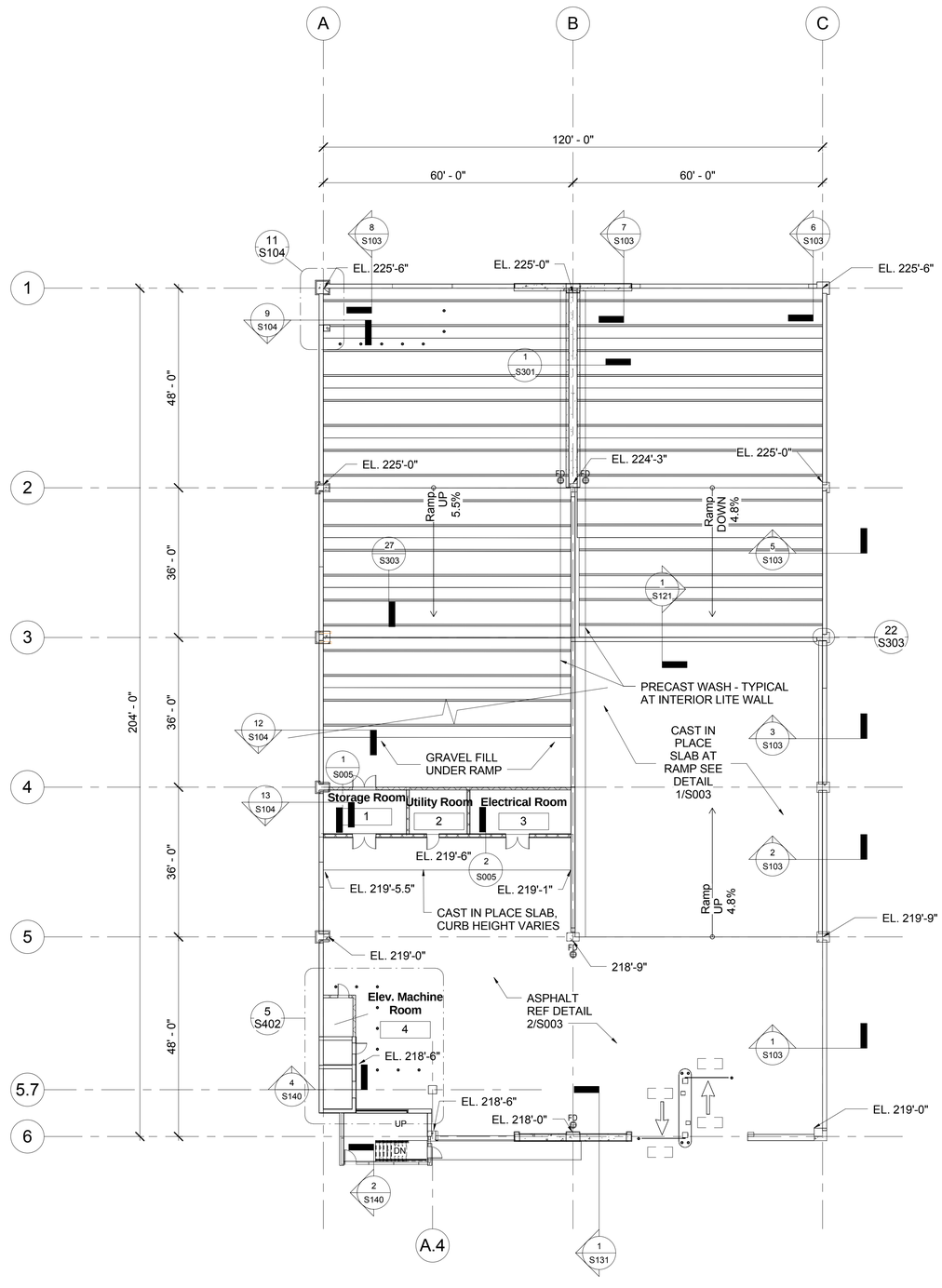

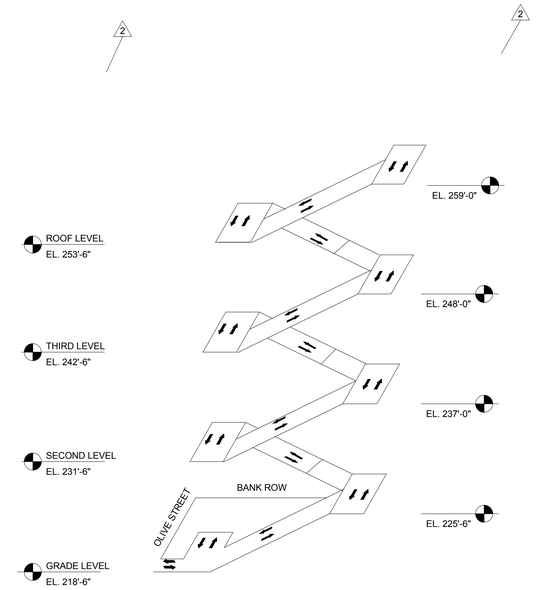

1 S201 **Slab on Grade Plan**
1/16" = 1'-0"

N

DESMAN Design Management

Olive Street Parking Facility

Olive Street
Greenfield, MA

CONSTRUCTION DOCUMENTS - BID SET

ISSUE

NO.	DESCRIPTION	DATE
2	100% CD	07/10/17

Copyright © 2017 DESMAN, Inc. All rights reserved. No part of these documents may be reproduced in any form or by any means without written permission from DESMAN, Inc.

DRAWING TITLE:
SLAB-ON-GRADE PLAN

DRAWING NO:
S201

SCALE: As indicated
DATE: 09/06/2017
PROJECT NO: 20-16105.01-1

DES.	DRWN.	CHK'D.
WJW	ALL	WTF

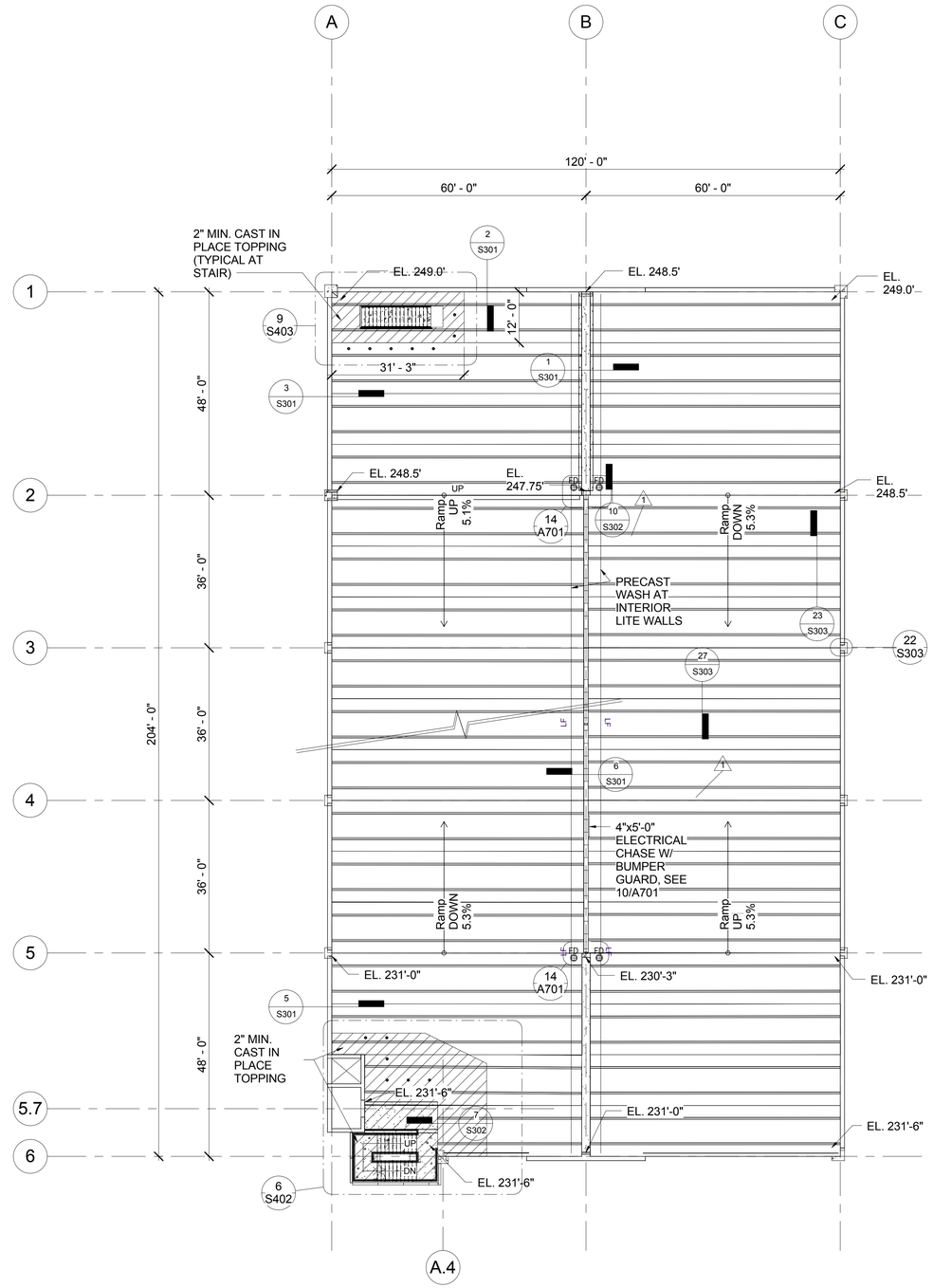

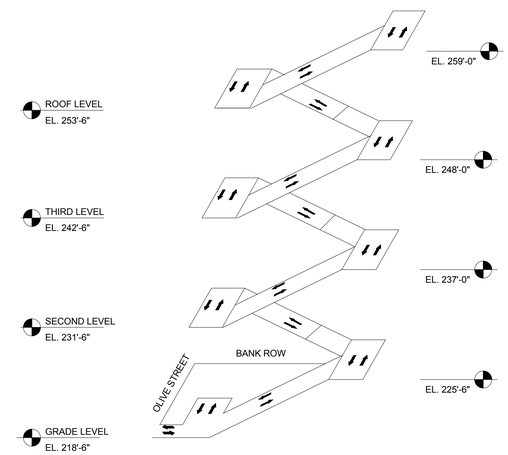

1 S202 **Typical Level Framing Plan**
1/16" = 1'-0"

N

DESMAN Design Management

Olive Street Parking Facility

Olive Street
Greenfield, MA

CONSTRUCTION DOCUMENTS - BID SET

ISSUE

NO.	DESCRIPTION	DATE
2	100% CD	07/10/17
1	Addendum 1	06/02/17

Copyright © 2017 DESMAN, Inc. All rights reserved. No part of these documents may be reproduced in any form or by any means without written permission from DESMAN, Inc.

DRAWING TITLE:
TYPICAL LEVEL FRAMING PLAN

DRAWING NO:
S202

SCALE: As indicated
DATE: 09/06/2017
PROJECT NO: 20-16105.01-1

DES.	DRWN.	CHK'D.
WJW	ALL	WTF

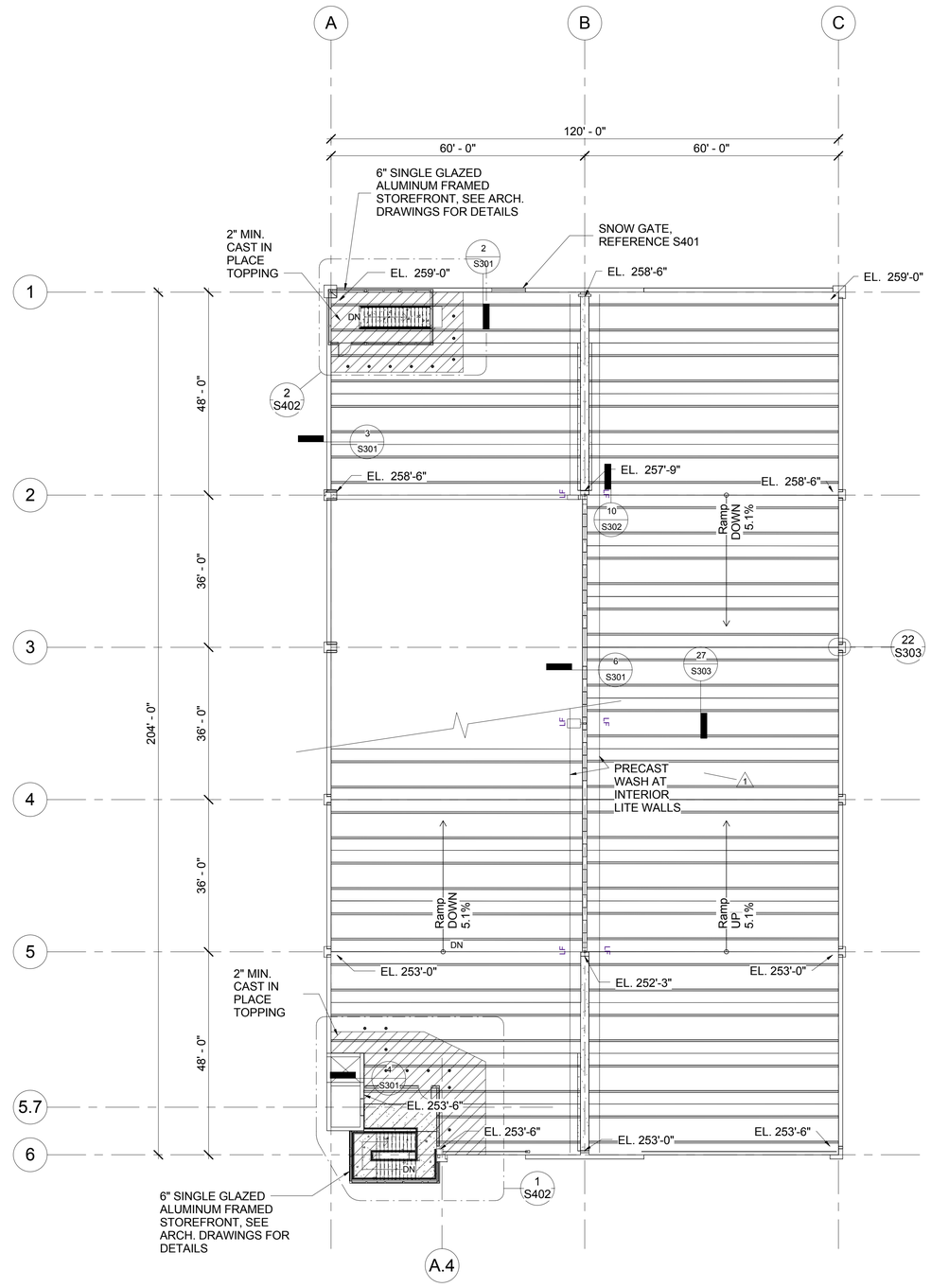

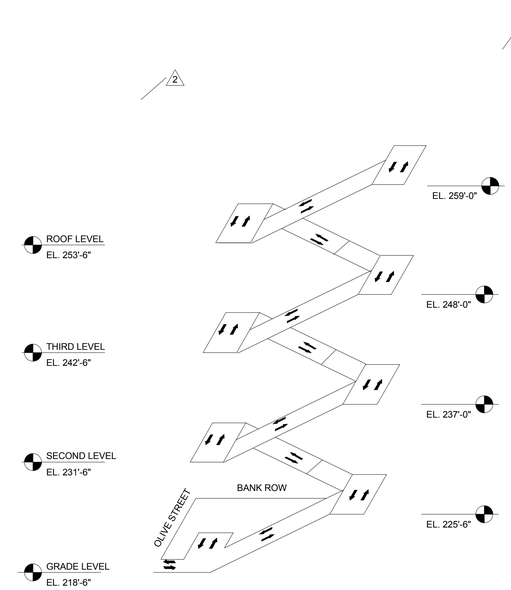

1 S203 **Roof Level Framing Plan**
1/16" = 1'-0"

N

DESMAN Design Management

Olive Street Parking Facility

Olive Street
Greenfield, MA

CONSTRUCTION DOCUMENTS - BID SET

ISSUE

NO.	DESCRIPTION	DATE
2	100% CD	07/10/17
1	Addendum 1	06/02/17

Copyright © 2017 DESMAN, Inc. All rights reserved. No part of these documents may be reproduced in any form or by any means without written permission from DESMAN, Inc.

DRAWING TITLE:
ROOF LEVEL FRAMING PLAN

DRAWING NO:
S203

SCALE: As indicated
DATE: 09/06/2017
PROJECT NO: 20-16105.01-1

DES.	DRWN.	CHK'D.
WJW	ALL	WTF

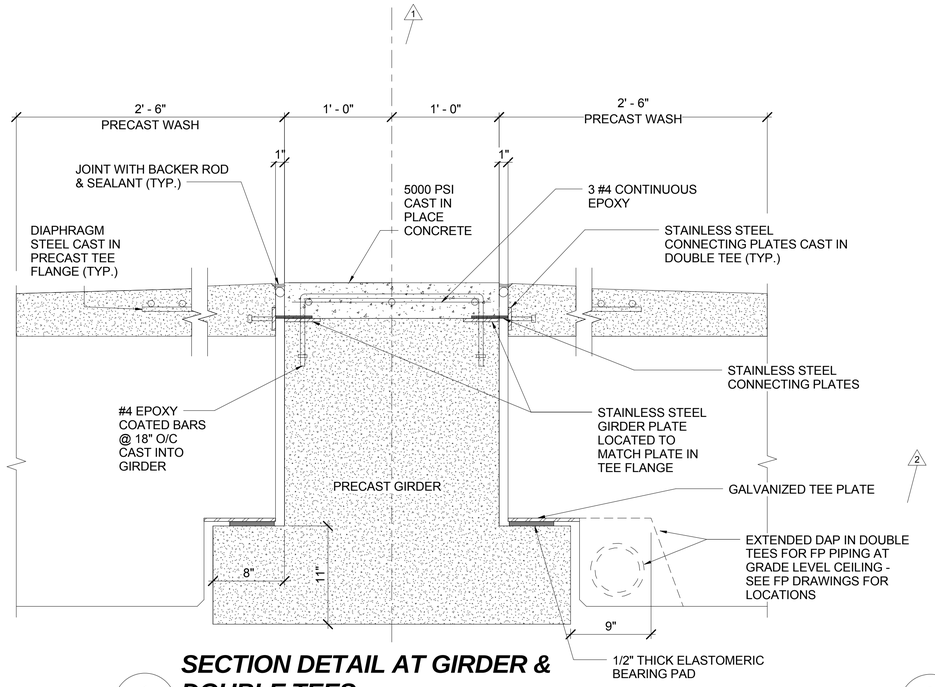

1 S301 **SECTION DETAIL AT GIRDER & DOUBLE TEES**
1 1/2" = 1'-0"

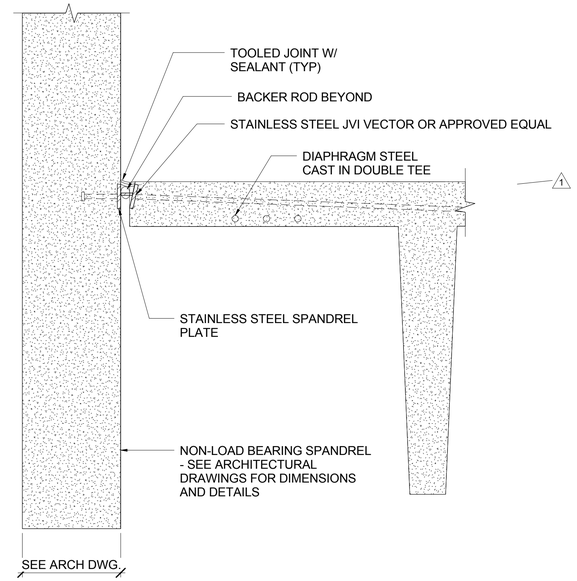

2 S301 **DOUBLE TEE @ NON-LOAD BEARING PANEL & WALL**
1 1/2" = 1'-0"

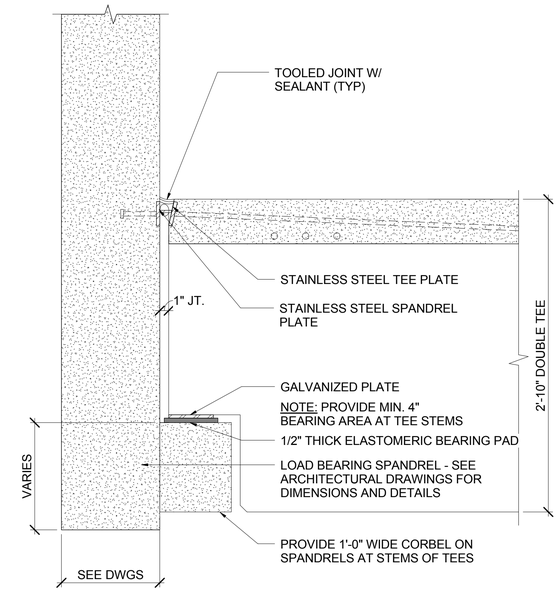

3 S301 **DOUBLE TEE @ LOAD BEARING PANEL**
1 1/2" = 1'-0"

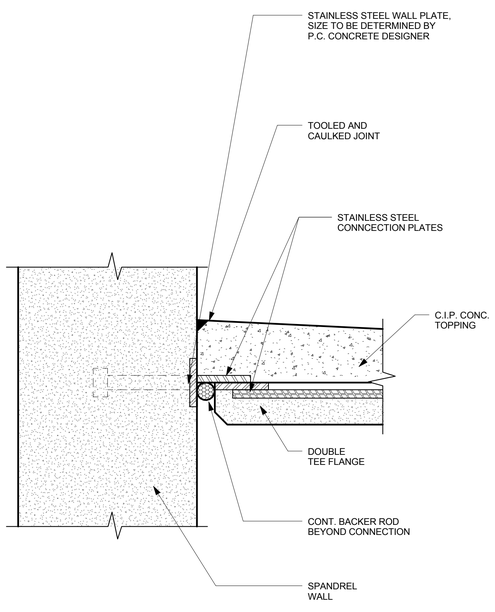

4 S301 **DETAIL AT TEE EDGE WITH C.I.P. CONCRETE TOPPING1**
3" = 1'-0"

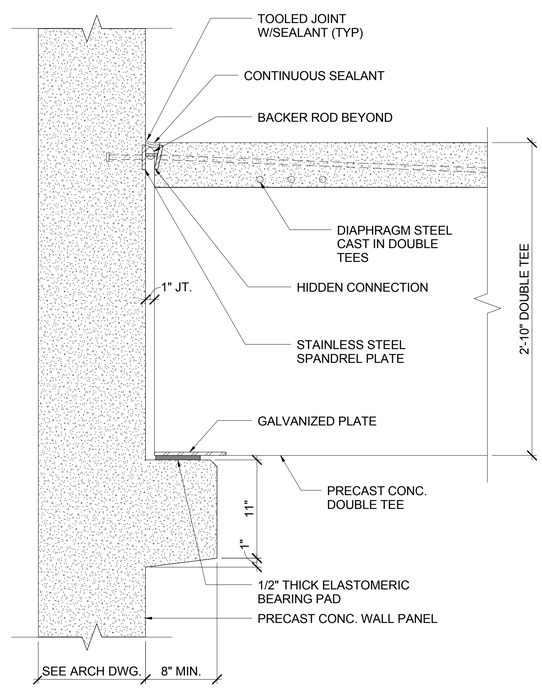

5 S301 **WALL PANEL & DOUBLE TEE**
1 1/2" = 1'-0"

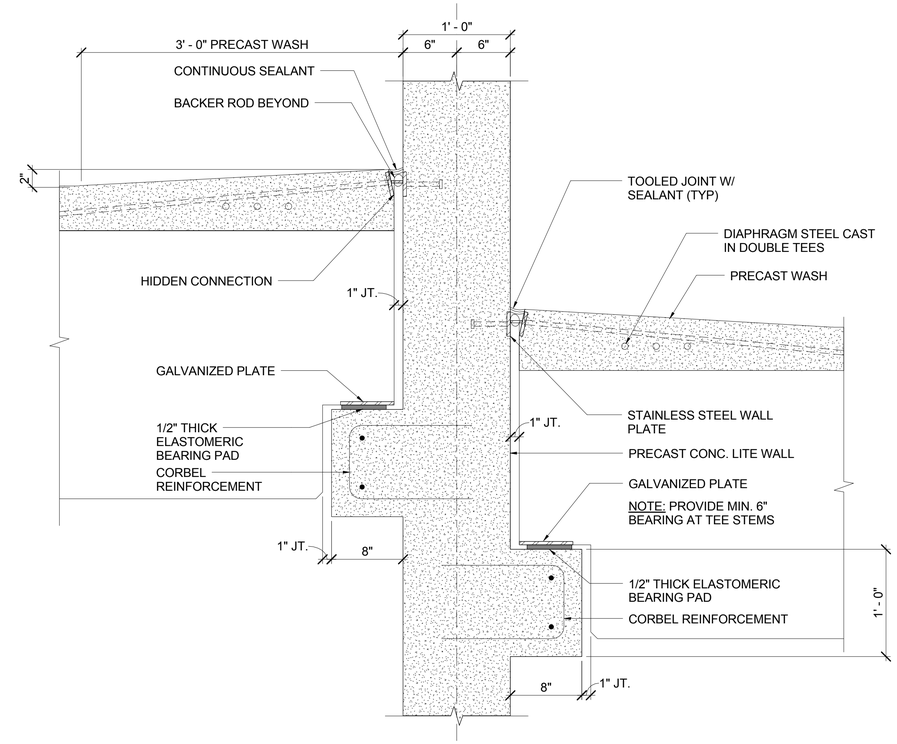

6 S301 **DOUBLE TEE @ LITE WALL**
1 1/2" = 1'-0"

DESMAN
Design Management

Olive Street Parking Facility

Olive Street
Greenfield, MA

CONSTRUCTION DOCUMENTS - BID SET

ISSUE

NO.	DESCRIPTION	DATE
2	100% CD	07/10/17
1	Addendum 1	06/02/17

Copyright © 2017 DESMAN, Inc. All rights reserved. No part of these documents may be reproduced in any form or by any means without written permission from DESMAN, Inc.

DRAWING TITLE:
TYPICAL PRECAST DETAILS

DRAWING NO:
S301

SCALE: As indicated
DATE: 09/06/2017
PROJECT NO: 20-16105.01-1

DES.	DRWN.	CHK'D.
WJW	ALL	WTF

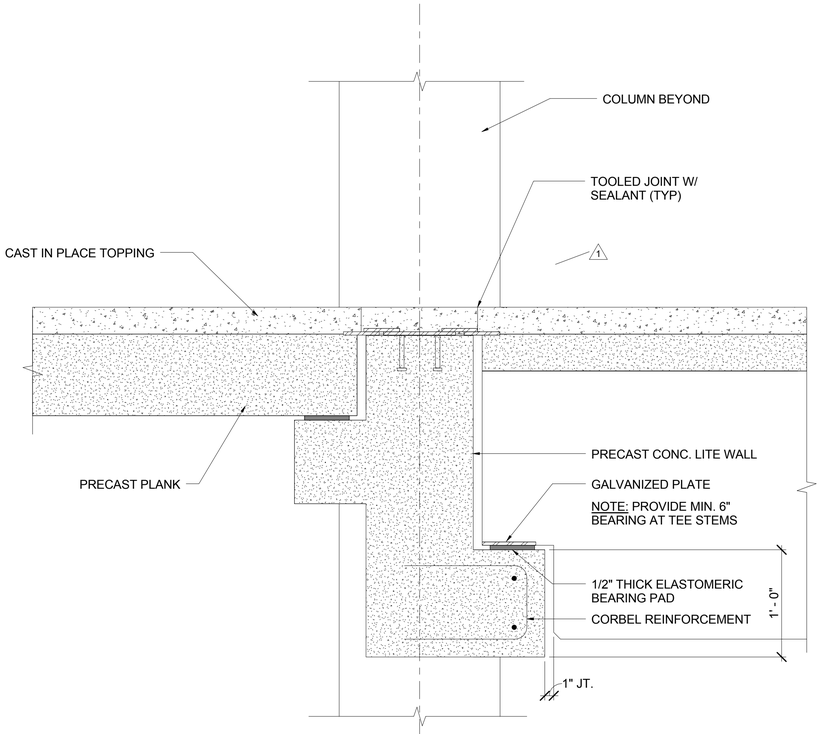

7 / S302 **DETAIL AT SOUTH STAIR**
1 1/2" = 1'-0"

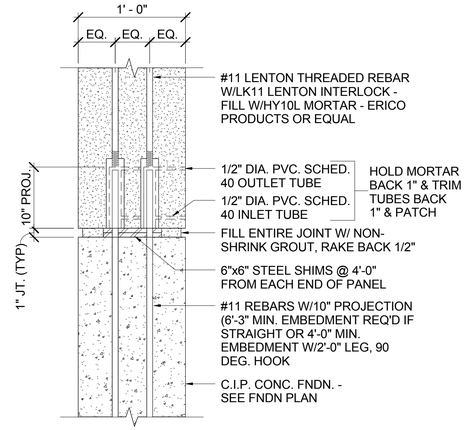

8 / S302 **LITE WALL AT FNDN WALL**
1 1/2" = 1'-0"

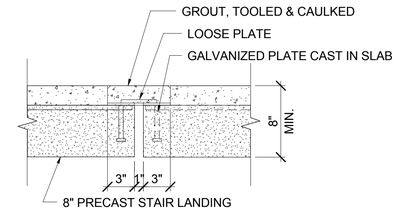

9 / S302 **STAIR LANDING DETAIL**
1 1/2" = 1'-0"

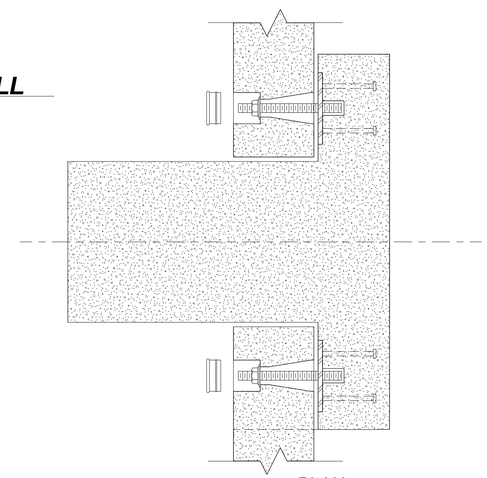

PLAN

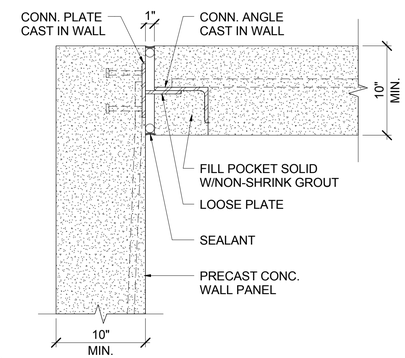

13 / S302 **DETAIL AT CORNER WALL PANELS**
1 1/2" = 1'-0"

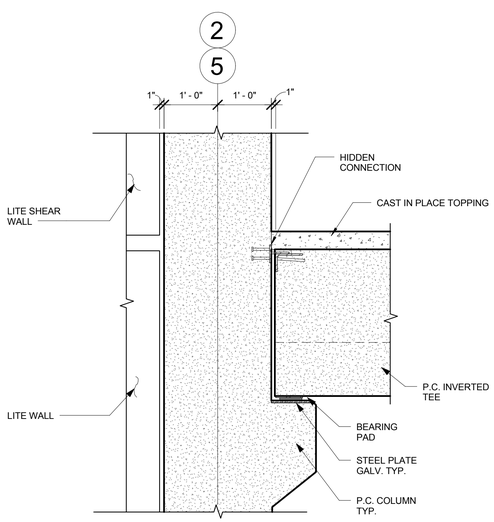

10 / S302 **COLUMN / INVERTED TEE CONNECTION**
3/4" = 1'-0"

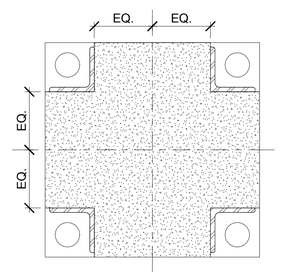

PLAN

NOTES:
CONNECTION DESIGN VALID FOR COLS. 16"x16" OR LARGER

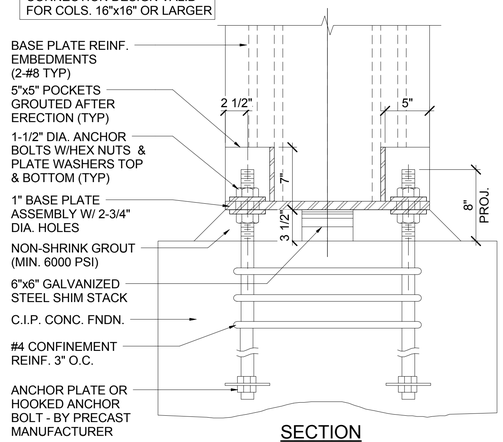

SECTION

11 / S302 **COLUMN AT C.I.P. PIER DETAIL**
1 1/2" = 1'-0"

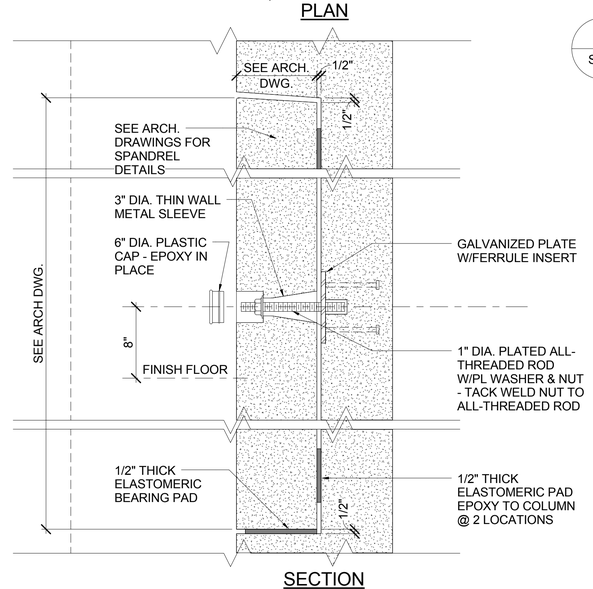

SECTION

12 / S302 **SPANDREL & EXTERIOR COLUMN DETAIL**
1 1/2" = 1'-0"

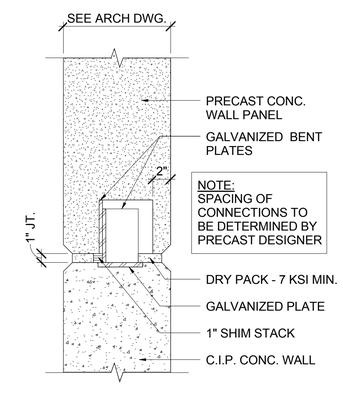

14 / S302 **WALL PANEL AT FNDN WALL**
1 1/2" = 1'-0"

DESMAN Design Management

Olive Street Parking Facility

Olive Street
Greenfield, MA

CONSTRUCTION DOCUMENTS - BID SET

ISSUE

NO.	DESCRIPTION	DATE
1	Addendum 1	06/02/17

Copyright © 2017 DESMAN, Inc. All rights reserved. No part of these documents may be reproduced in any form or by any means without written permission from DESMAN, Inc.

DRAWING TITLE:
TYPICAL PRECAST DETAILS

DRAWING NO:
S302

SCALE: As indicated
DATE: 09/06/2017
PROJECT NO: 20-16105.01-1

DES.	DRWN.	CHK'D.
WJW	ALL	WTF

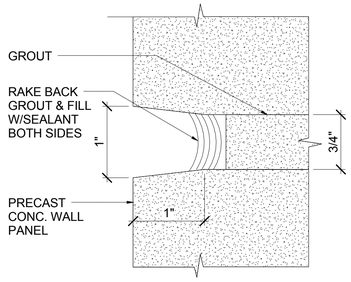

15 S303 **DETAIL AT GROUTED JOINTS**
12" = 1'-0"

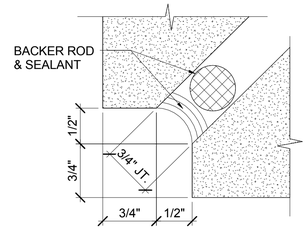

16 S303 **MITERED PRECAST JT. DETAIL AT STAIR WALLS**
12" = 1'-0"

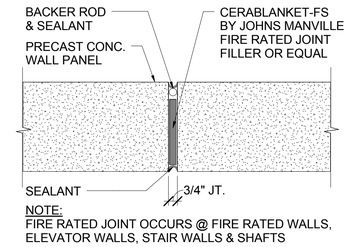

NOTE:
FIRE RATED JOINT OCCURS @ FIRE RATED WALLS, ELEVATOR WALLS, STAIR WALLS & SHAFTS

17 S303 **FIRED RATED JOINT**
1 1/2" = 1'-0"

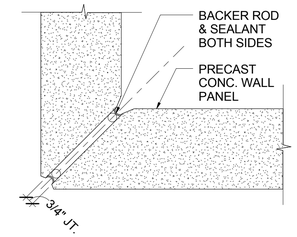

18 S303 **MITERED PRECAST JT.**
1 1/2" = 1'-0"

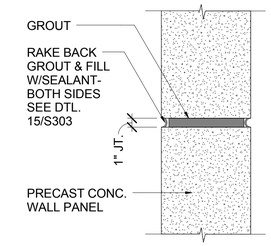

19 S303 **HORIZONTAL PRECAST JOINT**
1 1/2" = 1'-0"

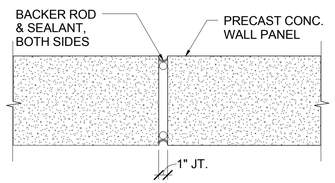

20 S303 **VERTICAL PRECAST JT.**
1 1/2" = 1'-0"

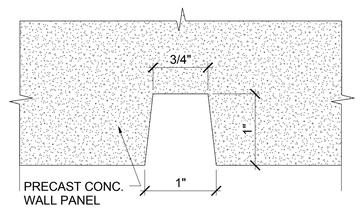

21 S303 **RUSTICATION JT. DETAIL**
12" = 1'-0"

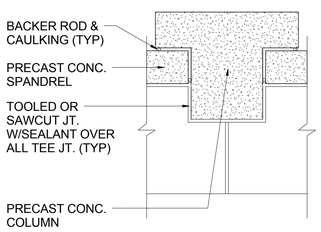

22 S303 **PLAN OF JOINTS AT COLUMN**
1/2" = 1'-0"

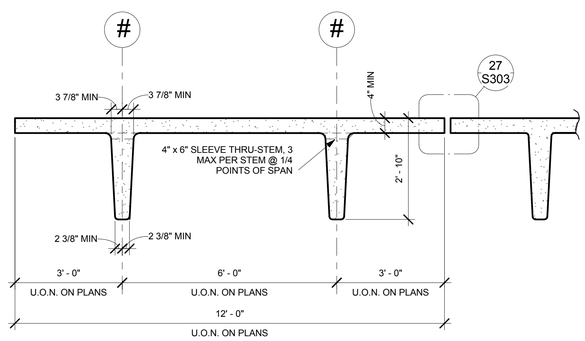

ADDITIONAL HOLES:

PROVIDE ADDITIONAL SLEEVED PENETRATIONS AS REQUIRED FOR ELECTRICAL, MECHANICAL AND PLUMBING SERVICES

23 S303 **DOUBLE TEE DETAIL**
1/2" = 1'-0"

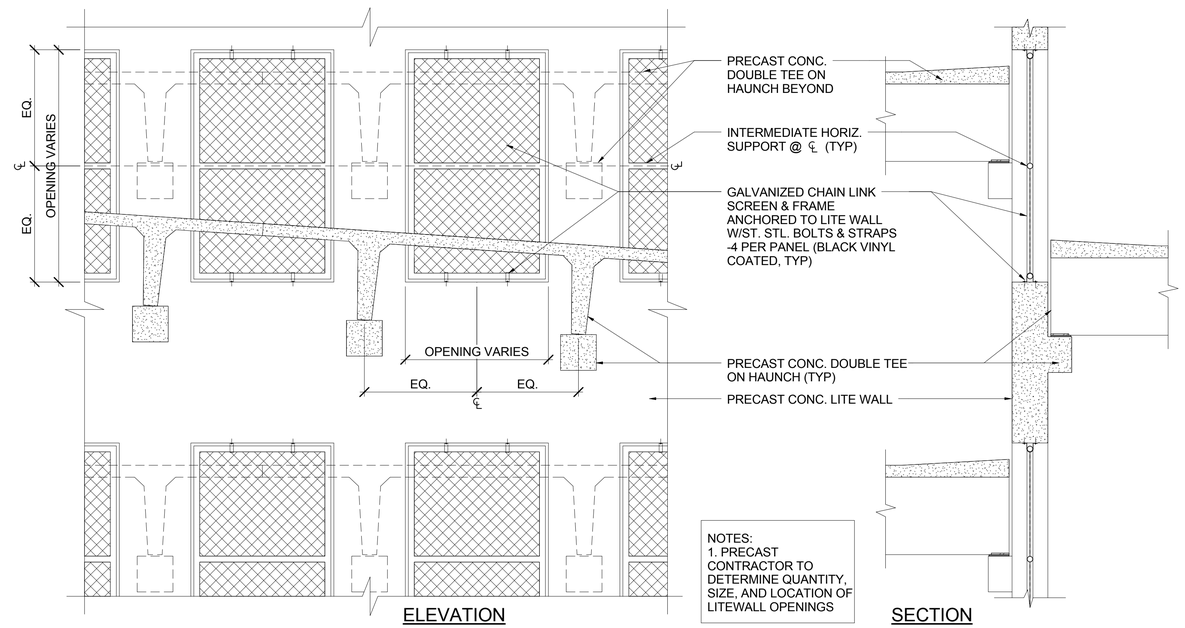

NOTES:
1. PRECAST CONTRACTOR TO DETERMINE QUANTITY, SIZE, AND LOCATION OF LITEWALL OPENINGS

24 S303 **PRECAST LITE WALL WITH OPENINGS**
1/2" = 1'-0"

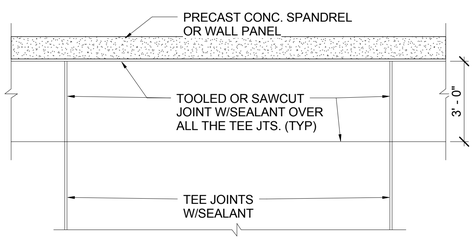

25 S303 **PLAN OF JOINTS AT SPANDREL/WALL PANEL**
3/8" = 1'-0"

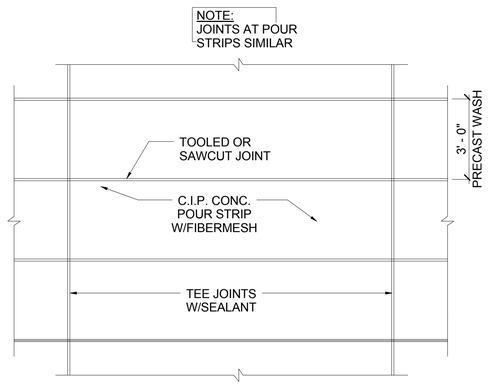

26 S303 **PLAN OF JOINTS OVER TEE GIRDER**
3/8" = 1'-0"

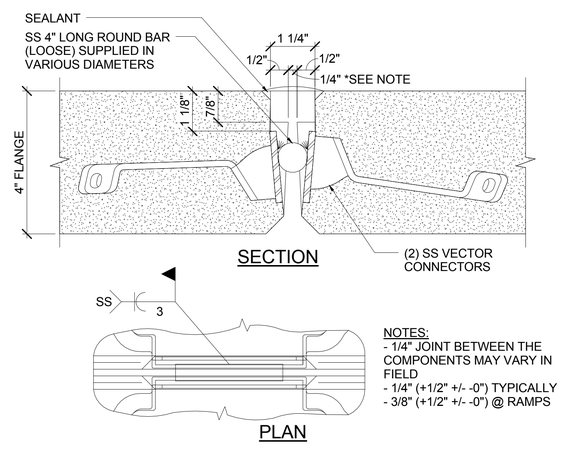

NOTES:
- 1/4" JOINT BETWEEN THE COMPONENTS MAY VARY IN FIELD
- 1/4" (+1/2" +/- -0") TYPICALLY
- 3/8" (+1/2" +/- -0") @ RAMPS

27 S303 **TYPICAL TEE TO TEE DETAIL**
6" = 1'-0"

NOTES:
1. DETAILS DEPICTED ARE TYPICAL PRECAST DETAILS MEANT TO DEFINE THE PRECAST ELEMENTS FOR THE STRUCTURE. ALL CONNECTIONS, PLATE SIZES, BOLT SIZES, WELDING, ANCHORING, REINFORCEMENT, ETC. ARE THE RESPONSIBILITY OF THE PRECAST MANUFACTURER AND ARE TO BE INCLUDED IN THE FINAL DESIGN CALCULATIONS.

2. THE PRECAST CONTRACTOR IS TO DETERMINE THE SIZE OF THE DIAPHRAGM STEEL BASED ON STRUCTURAL ANALYSIS OF THE FRAME.

3. THE GENERAL CONTRACTOR IS TO PROVIDE EPOXY COATED STEEL DIAPHRAGM STEEL IN CONCRETE POUR STRIPS. FOR PRICING PURPOSES ASSUME (3) - #6 BARS CONTINUOUS, IN ALL POUR STRIPS.

DESMAN
Design Management

Olive Street Parking Facility

Olive Street
Greenfield, MA

CONSTRUCTION DOCUMENTS - BID SET

ISSUE

NO.	DESCRIPTION	DATE

Copyright © 2017 DESMAN, Inc. All rights reserved. No part of these documents may be reproduced in any form or by any means without written permission from DESMAN, Inc.

DRAWING TITLE:
TYPICAL PRECAST DETAILS

DRAWING NO:
S303

SCALE: As indicated
DATE: 09/06/2017
PROJECT NO: 20-16105.01-1

DES.	DRWN.	CHK'D.
WJW	ALL	WTF

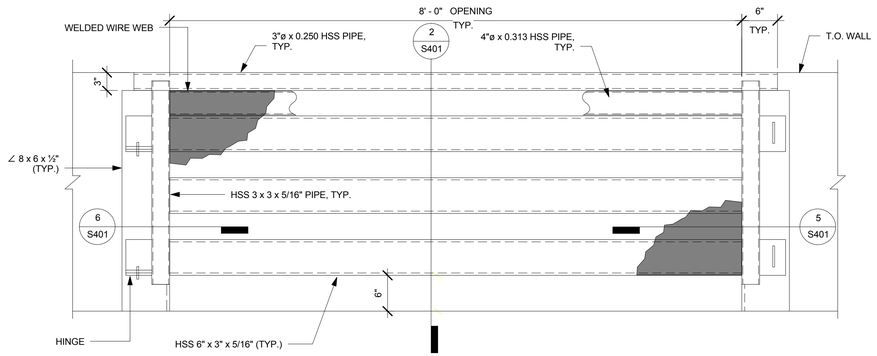

1 S401 **SNOW GATE ELEVATION**
1" = 1'-0"

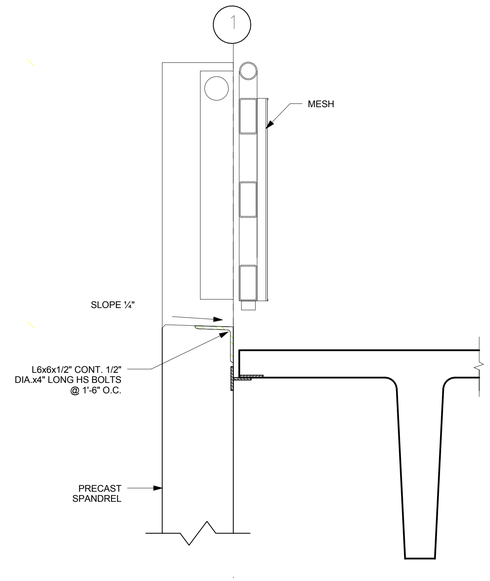

2 S401 **SNOW GATE SECTION**
1" = 1'-0"

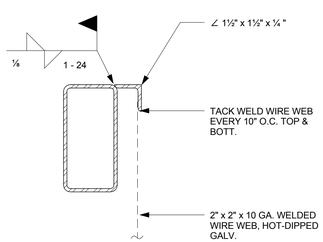

3 S401 **DETAIL**
3" = 1'-0"

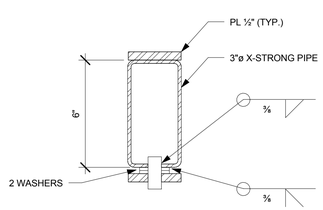

4 S401 **HINGE DETAIL**
3" = 1'-0"

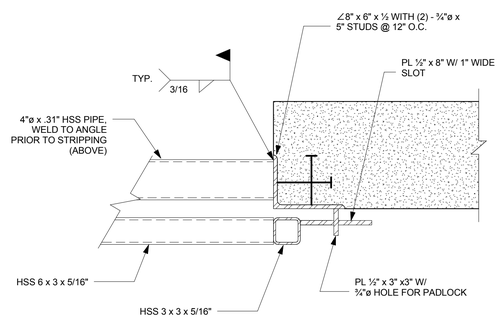

5 S401 **SECTION**
1 1/2" = 1'-0"

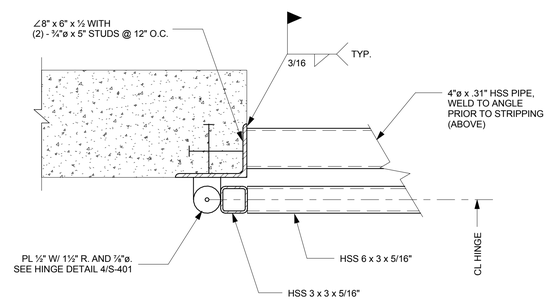

6 S401 **SECTION**
1 1/2" = 1'-0"

DESMAN
Design Management

Olive Street Parking Facility

Olive Street
Greenfield, MA

CONSTRUCTION DOCUMENTS - BID SET

ISSUE

NO.	DESCRIPTION	DATE

Copyright © 2017 DESMAN, Inc. All rights reserved. No part of these documents may be reproduced in any form or by any means without written permission from DESMAN, Inc.

DRAWING TITLE:
SNOW GATE DETAILS

DRAWING NO:
S401

SCALE: As indicated
DATE: 09/06/2017
PROJECT NO: 20-16105.01-1

DES.	DRWN.	CHK'D.
WJW	ALL	WTF

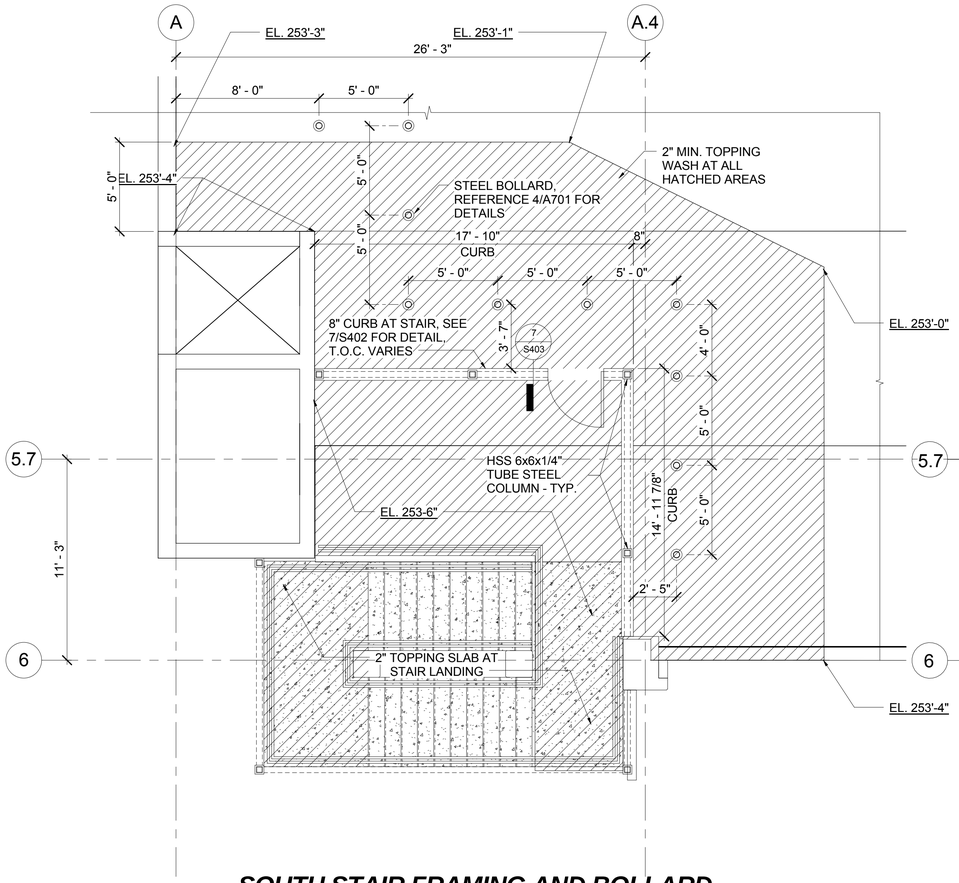

SOUTH STAIR FRAMING AND BOLLARD PLAN

1 / S402 — 1/4" = 1'-0"

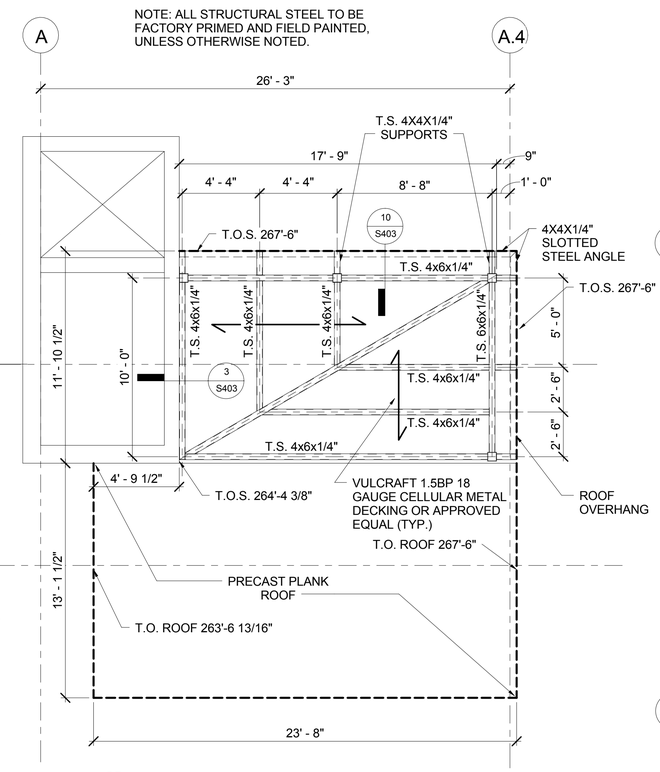

SOUTH STAIR ROOF FRAMING

3 / S402 — 1/4" = 1'-0"

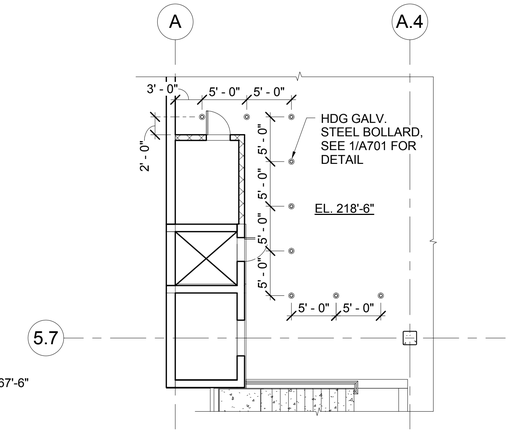

SLAB-ON-GRADE BOLLARD PLAN AT SOUTH STAIR

5 / S402 — 1/8" = 1'-0"

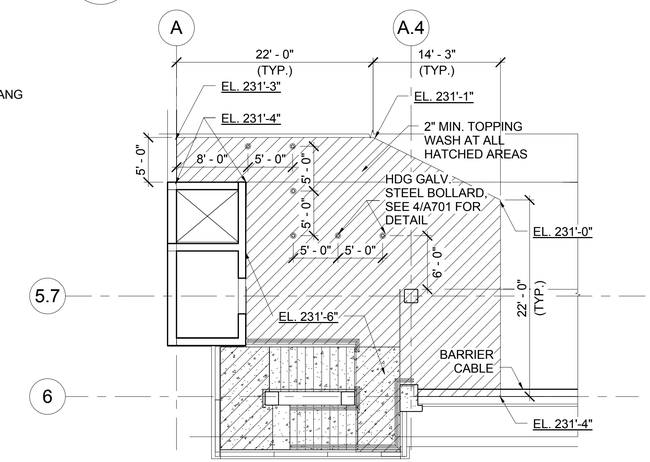

SECOND LEVEL PLAN AT SOUTH STAIR

6 / S402 — 1/8" = 1'-0"

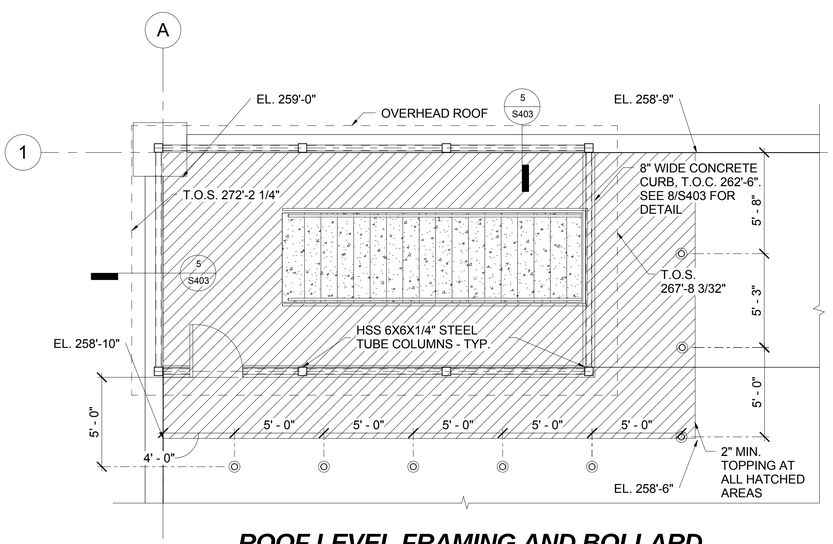

ROOF LEVEL FRAMING AND BOLLARD PLAN

2 / S402 — 1/4" = 1'-0"

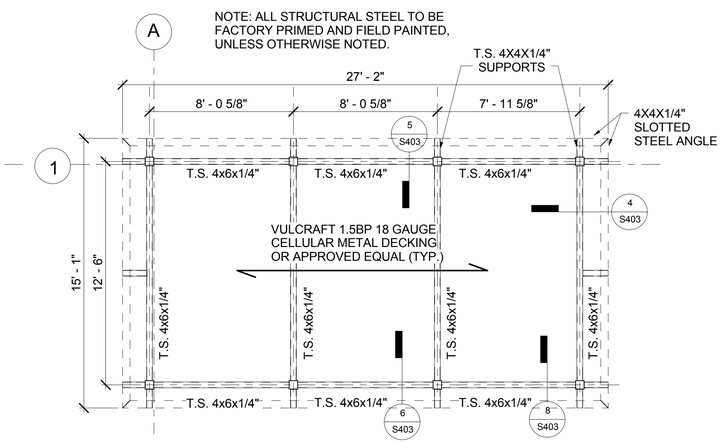

NORTH STAIR ROOF STEEL

4 / S402 — 1/4" = 1'-0"

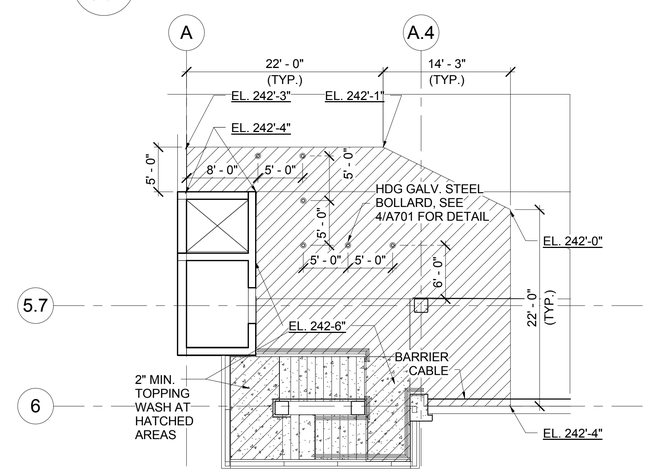

THIRD LEVEL PLAN AT SOUTH STAIR

7 / S402 — 1/8" = 1'-0"

DESMAN Design Management

Olive Street Parking Facility

Olive Street
Greenfield, MA

CONSTRUCTION DOCUMENTS - BID SET

ISSUE

NO.	DESCRIPTION	DATE
3	100% CD- MOD. 1	08/01/17

Copyright © 2017 DESMAN, Inc. All rights reserved. No part of these documents may be reproduced in any form or by any means without written permission from DESMAN, Inc.

DRAWING TITLE:
ROOF STEEL DETAILS

DRAWING NO:
S402

SCALE: As indicated
DATE: 09/06/2017
PROJECT NO: 20-16105.01-1

DES.	DRWN.	CHK'D.
WJW	ALL	WTF

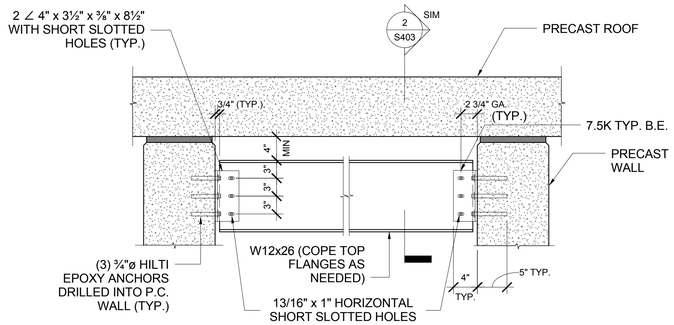

1 S403 **HOISTWAY BEAM ELEVATION**
1" = 1'-0"

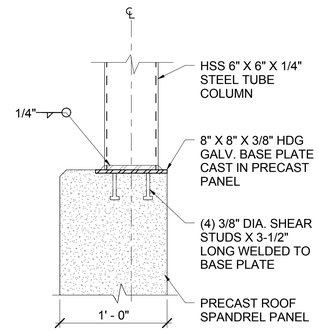

5 S403 **STAIR COLUMN AT SPANDREL**
1 1/2" = 1'-0"

GENERAL NOTE: ALL STRUCTURAL STEEL TO BE FACTORY PRIMED AND FIELD PAINTED UNLESS OTHERWISE NOTED.

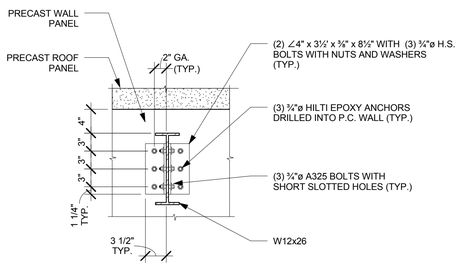

2 S403 **HOISTWAY BEAM SECTION**
1" = 1'-0"

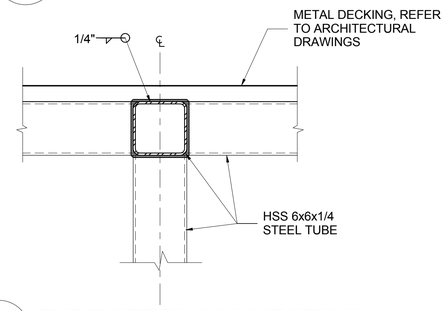

6 S403 **TUBE STEEL CONNECTION**
1 1/2" = 1'-0"

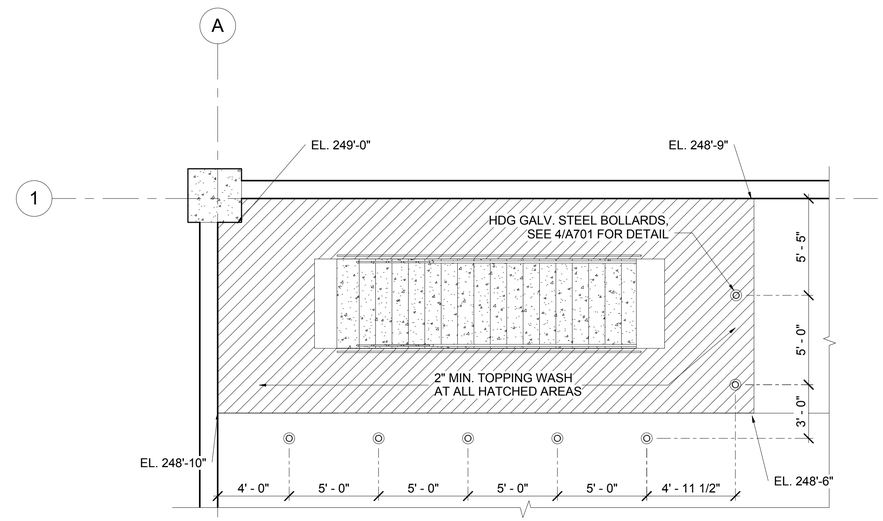

9 S403 **GRADE & TYPICAL LEVEL BOLLARD PLAN AT NORTH STAIR**
1/4" = 1'-0"

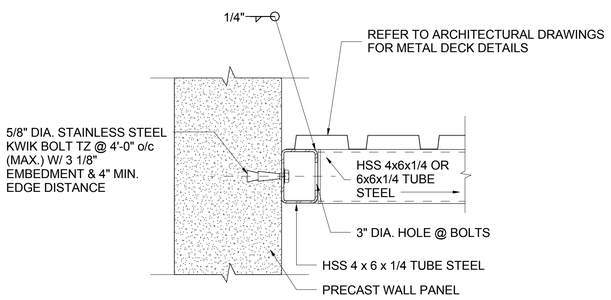

3 S403 **TUBE STEEL CONNECTION AT PRECAST**
1 1/2" = 1'-0"

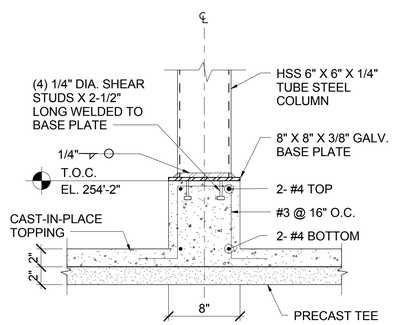

7 S403 **SOUTH STAIR COLUMN AT CURB**
1 1/2" = 1'-0"

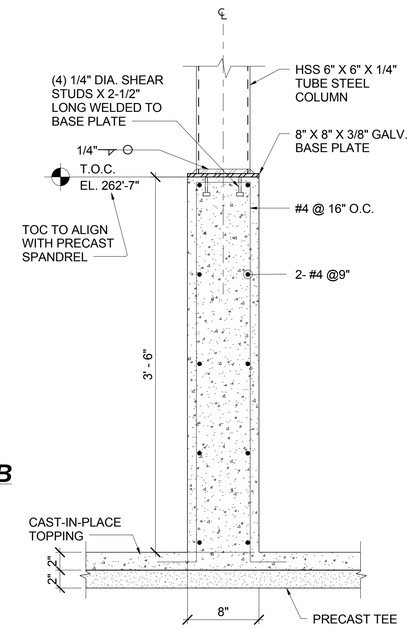

NOTE: AT 2'-0" CURB IN LOCALIZED LOCATION (SEE ARCH DRAWINGS FOR LOCATIONS) T.O.C. TO BE 261'-1"

8 S403 **NORTH STAIR COLUMN AT CURB**
1 1/2" = 1'-0"

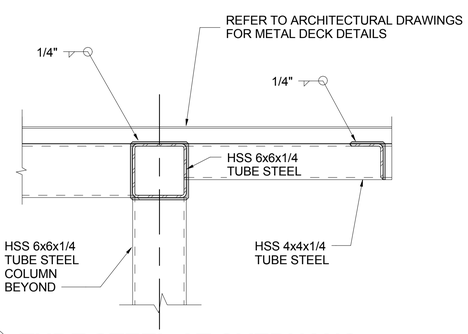

4 S403 **TUBE STEEL AT OVERHANG**
1 1/2" = 1'-0"

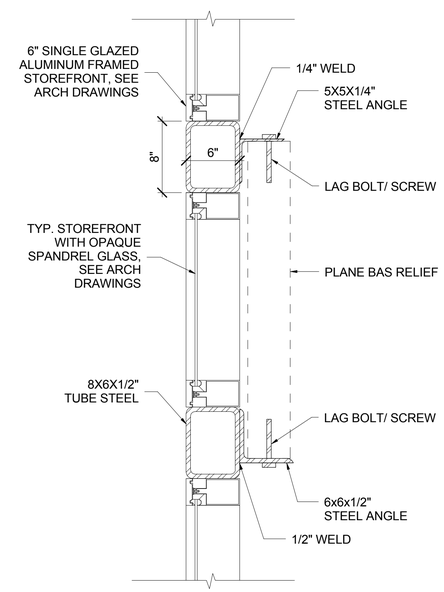

10 S403 **PLANE RELIEF MOUNTING DETAIL**
1 1/2" = 1'-0"

DESMAN Design Management

Olive Street Parking Facility

Olive Street
Greenfield, MA

CONSTRUCTION DOCUMENTS - BID SET

ISSUE

NO.	DESCRIPTION	DATE
4	Permit Set	08/23/17
3	100% CD- MOD. 1	08/01/17
2	100% CD	07/10/17

Copyright © 2017 DESMAN, Inc. All rights reserved. No part of these documents may be reproduced in any form or by any means without written permission from DESMAN, Inc.

DRAWING TITLE:
ROOF STEEL DETAILS

DRAWING NO:
S403

SCALE: As indicated
DATE: 09/06/2017
PROJECT NO: 20-16105.01-1

DES.	DRWN.	CHK'D.
WJW	ALL	WTF

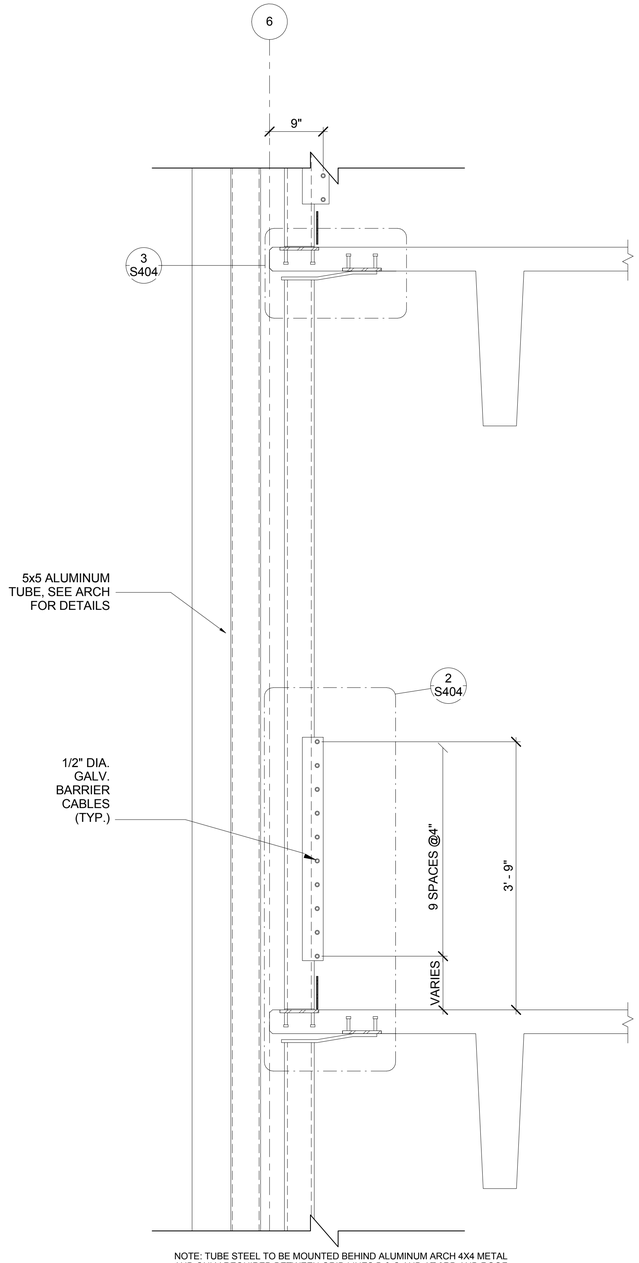

NOTE: TUBE STEEL TO BE MOUNTED BEHIND ALUMINUM ARCH 4X4 METAL AND ONLY REQUIRED BETWEEN GRID LINES B & C AND AT 3RD AND ROOF LEVELS, SEE ARCHITECTURAL DRAWINGS.

ALL STRUCTURAL STEEL IN BARRIER CABLE SYSTEM TO BE FACTORY PRIMED AND FIELD PAINTED UNLESS OTHERWISE NOTED.

1 / S404 Barrier Cable - Intermediate Support

1" = 1'-0"

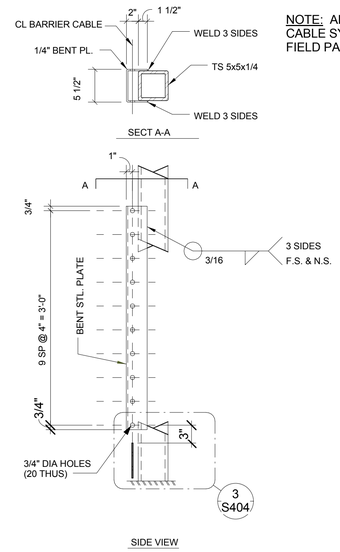

NOTE: ALL STRUCTURAL STEEL IN BARRIER CABLE SYSTEM TO BE FACTORY PRIMED AND FIELD PAINTED UNLESS OTHERWISE NOTED.

2 / S404 Typ. Cable Intermediate Support Detail

1" = 1'-0"

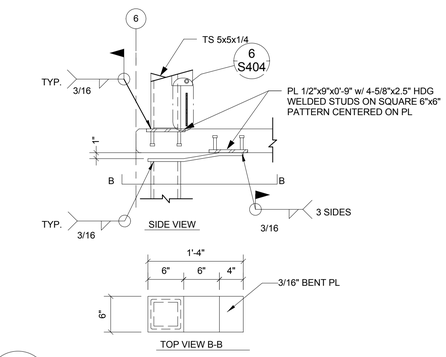

3 / S404 Typical Connection Details

1" = 1'-0"

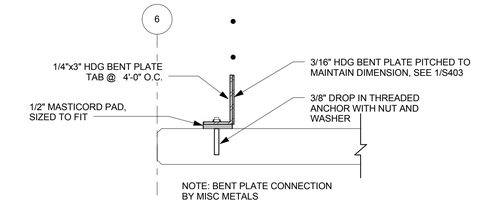

6 / S404 Typical Bent Plate Connection

1 1/2" = 1'-0"

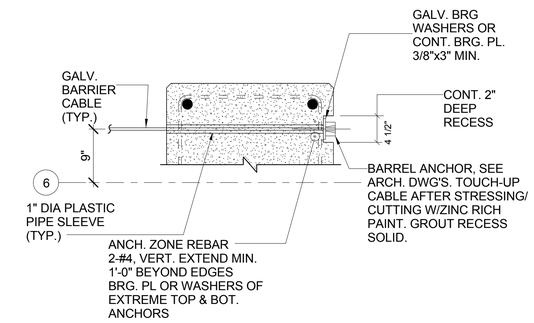

NOTE:
CABLE TO BE 1/2" DIA GALVANIZED P.C. CABLE MANUFACTURED TO CONFORM TO ASTM A-416 ULT. CAPACITY OF 33.4 KIPS MINIMUM.

5 / S404 Typical Through Column End Anchor for Barrier Cable

1" = 1'-0"

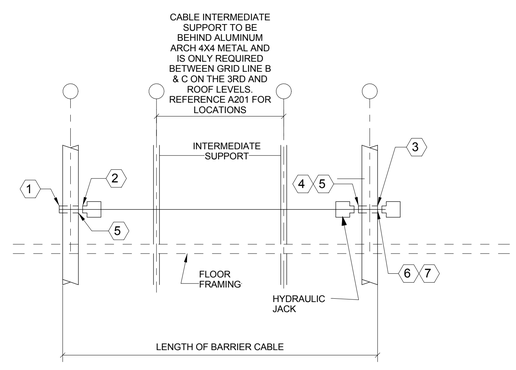

NOTES:

1. INSTALL BARRIER CABLES ONLY AFTER ALL STRUCTURES HAVE BEEN ERECTED AND ALL CONNECTIONS COMPLETED.
2. FOR THE HYDRAULIC JACK USED IN THIS OPERATION, THE GAGE PRESSURE TO OBTAIN THE REQUIRED PRE-TENSIONING, SHALL BE DETERMINED BY TENDON SUPPLIER.

LEGEND:

1. PLACE CABLES THROUGH COLUMNS AND ANCHORS. INSERT WEDGES.
2. BACK-STRESS THE TENDONS AT "DEAD END" COLUMN TO SEAT WEDGES. STRESS CABLES TO 25 KIPS FORCE
3. STRESS CABLES AT PULLING END TO 4,000 POUNDS, U.N.O.
4. BACK-STRESS THE TENDONS AT "PULLING END" COLUMN ON THE FACE OPPOSITE THE INITIAL STRESSING FACE. TO SEAT WEDGES NOSE OF THE JACK SHALL BEAR ON A SLOTTED STEEL PLATE, NOT ON THE CONCRETE.
5. SPRAY RAM GRIPPER MARKS AND ANCHOR WEDGES MARKS WITH ZRC, GALVANOX OR EQUIVALENT.
6. MECHANICALLY TERMINATE EXCESS LENGTH OF CABLES AT END ANCHORAGES. APPLY 2 COATS OF ZRC, GALVANOX OR EQUIVALENT, IN ACCORDANCE WITH MANUFACTURER'S INSTRUCTIONS.
7. FILL POCKETS IN COLUMNS WITH NON-SHRINK, NON-METALLIC 5,000 PSI GROUT

4 / S404 Stressing Procedure for Galvanized Barrier Cable

1" = 1'-0"

NOTE: PRE-ASSEMBLED AND SHIPPED TO PRECASTERS.

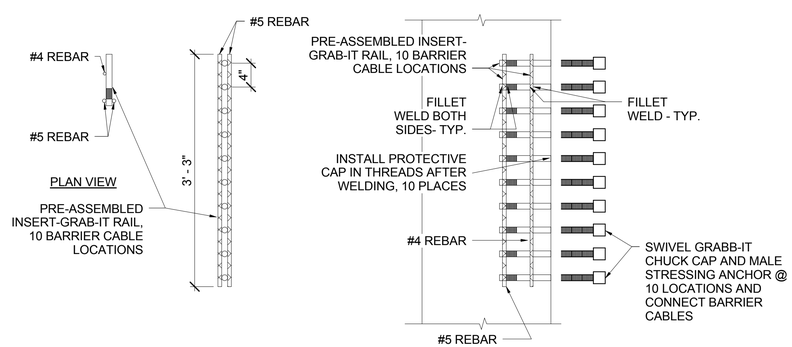

7 / S404 Column Barrier Cable Connection

1" = 1'-0"

DESMAN Design Management

Olive Street Parking Facility

Olive Street
Greenfield, MA

CONSTRUCTION DOCUMENTS - BID SET

ISSUE

NO.	DESCRIPTION	DATE
4	Permit Set	08/23/17
2	100% CD	07/10/17

Copyright © 2017 DESMAN, Inc. All rights reserved. No part of these documents may be reproduced in any form or by any means without written permission from DESMAN, Inc.

DRAWING TITLE:
TYPICAL BARRIER CABLE DETAILS

DRAWING NO:
S404

SCALE: As indicated
DATE: 09/06/2017
PROJECT NO: 20-16105.01-1

DES.	DRWN.	CHK'D.
WJW	ALL	WTF

F — MANUAL PULL STATION

PS — PRESSURE SWITCH

SD — DUCT SMOKE DETECTOR, MOUNTED AND WIRED BY EC.

FS — FLOW SWITCH

MM — MONITOR MODULE

TS — SPRINKLER TAMPER SWITCH

FIRE ALARM NOTIFICATION STROBE WALL MOUNTED AT 80-90" AFF

FIRE ALARM NOTIFICATION SPEAKER/STROBE WALL MOUNTED AT 80-90" AFF

TS — TEST STATION, MH = 78"AFF, UON

RM — RELAY MODULE

EOLR — END OF LINE RESISTOR

FAP — FIRE ALARM PANEL

FAEP — FIRE ALARM ENUNCIATOR PANEL

RMB — RADIO MASTER BOX

FIRE ALARM NOTIFICATION STROBE – CEILING MOUNTED

FIRE ALARM NOTIFICATION HORN/STROBE – CEILING MOUNTED

DM — MAGNETIC DOOR HOLD-OPEN INTERFACED WITH FIRE ALARM PANEL

SWITCHING & WIRING LEGEND

$ — TOGGLE SWITCH, SINGLE POLE, SUBSCRIPT INDICATES TYPE

- 3 = THREE WAY
- 4 = FOUR WAY
- P = PILOT LIGHT
- D = DIMMER
- WP = WEATHER PROOF
- O = OCCUPANCY SENSOR
- T = SPRING WOUND TIMER 6 HOUR
- a,b,c = SWITCHING DESIGNATION, NUMBER OF LETTERS EQUALS NUMBER OF GANGED SWITCHES

##-PANEL — HOMERUN TO DESIGNATED PANELBOARD, (#=NUMBERS INDICATE CIRCUIT NUMBERS) (2#12&1#12G-3/4"C., OR AS INDICATED IN PANEL SCHEDULES)

DUPLEX RECEPTACLE, SUBSCRIPT INDICATES TYPE:

QUAD RECEPTACLE, SUBSCRIPT INDICATES TYPE;

- WP = WEATHERPROOF "IN USE" COVER
- GFI = GROUND FAULT INTERRUPTING
- SS = SURGE SUPPRESSION
- S = SAFETY TYPE, TAMPER PROOF
- AC = INSTALLED ABOVE COUNTER
- BC = INSTALLED BELOW COUNTER
- BCLG = INSTALLED 6" BELOW CEILING

DISCONNECT SWITCH

FUSED DISCONNECT SWITCH

X — POWER AND LIGHTING PANEL

MOTOR LOCATION

JB — JUNCTION BOX

Y — SECURITY CAMERA OUTLET

IP — SECURITY CAMERA IP SWITCH

POINT OF NEW INTERSECTION

J — HANDHOLE

ONE LINE LEGEND

NEW WIRE OR DEVICE

CIRCUIT BREAKER

LV — LOW VOLTAGE WIRING

FUSED DISCONNECT SWITCH

XXXAF / XXXAT = SIZE

PANELBOARD (MAIN LUG)

PANELBOARD (MAIN CIRCUIT BREAKER)

FUSE

SWITCH

COMBINATION MAGNETIC STARTER

MAGNETIC STARTER

TYPICAL FIXTURE

A a,b NL
- NL — NIGHT LIGHT
- a,b — SWITCH DESIGNATION
- A — FIXTURE TYPE

= EMERGENCY FIXTURE

= EXIT SIGN – SINGLE FACE, TOP MOUNTED, WITH DIRECTIONAL ARROW (X) AS INDICATED ON PLAN.

= EXIT SIGN – SINGLE FACE, WALL MOUNTED, WITH DIRECTIONAL ARROW (X) AS INDICATED ON PLAN.

HC = HANDICAP EXIT SIGN.

= RECESSED FIXTURE

KEYED NOTES

SHEET SPECIFIC DEMOLITION KEYED NOTES

SHEET SPECIFIC NEW WORK KEYED NOTES

GENERAL NOTES

THE FOLLOWING GENERAL NOTES APPLY TO ALL DRAWINGS AND TRADES ASSOCIATED WITH THOSE DRAWINGS.

G-1 THE ENGINEER WAIVES ANY AND ALL RESPONSIBILITY AND LIABILITY FOR PROBLEMS WHICH ARISE FROM FAILURE TO FOLLOW THESE PLANS, SPECIFICATIONS, AND/OR THE DESIGN INTENT THEY CONVEY, OR FOR PROBLEMS WHICH ARISE FROM OTHERS FAILURE TO OBTAIN AND/OR FOLLOW THE GUIDANCE OF THE ENGINEER.

G-2 ALL WORK SHALL CONFORM TO ALL FEDERAL CODES AND STANDARDS INCLUDING, BUT NOT LIMITED TO, NFPA 72-2010, IBC 09 WITH MASS AMMENDMENTS, UL, SMACNA, OSHA, AND NEC.(NFPA 70-2017).

G-3 CONTRACTOR AND ALL SUBCONTRACTORS SHALL PROTECT THE WORK SITE, SURROUNDING AREAS AND OCCUPANTS FROM DAMAGE AND INJURY.

G-4 CONTRACTOR AND ALL SUBCONTRACTORS SHALL FAMILIARIZE THEMSELVES WITH THE CONTRACT DOCUMENTS. ALL DRAWINGS OF ANY PARTICULAR TRADE SHALL BE USED IN CONJUNCTION WITH DRAWINGS OF ALL OTHER TRADES TO COORDINATE ALL CONSTRUCTION. ANY DISCREPANCIES SHALL BE BROUGHT TO THE ATTENTION OF THE ENGINEER AND ARCHITECT BEFORE PROCEEDING WITH THE AFFECTED WORK. ANY PROPOSED CHANGES, VARIATIONS, OR SUBSTITUTIONS MUST BE REVIEWED AND ACCEPTED BY THE ENGINEER AND ARCHITECT PRIOR TO IMPLEMENTATION.

G-5 ALL DRAWINGS ARE INTENDED TO SHOW THE GENERAL ARRANGEMENT, DESIGN INTENT AND EXTENT OF THE WORK. THEY SHALL BE CONSIDERED PARTLY DIAGRAMMATIC. THEY ARE NOT INTENDED TO BE SCALED FOR ROUGHING-IN MEASUREMENTS OR TO SERVE AS SHOP DRAWINGS.

G-6 THE CONTRACTOR IS RESPONSIBLE FOR VERIFYING ALL DIMENSIONS (AS-BUILT OR OTHERWISE) BEFORE COMMENCING FABRICATION, AND/OR ORDERING MATERIALS.

G-7 DETAILS SHOWN ON ANY DRAWING ARE TO BE CONSIDERED TYPICAL FOR ALL SIMILAR CONDITIONS, UNLESS OTHERWISE INDICATED.

ELECTRICAL TRADE NOTES

1. ALL ELECTRICAL WORK SHALL BE PERFORMED IN ACCORDANCE WITH THE LATEST APPLICABLE NATIONAL, STATE AND LOCAL CODES AND THE CURRENT NATIONAL ELECTRICAL CODE (NEC) BY ELECTRICIANS LICENSED BY THE STATE IN WHICH THE WORK IS PERFORMED.
2. ELECTRICAL CONTRACTOR IS RESPONSIBLE FOR OWN CORE DRILLING.
3. THE ELECTRICAL CONTRACTOR SHALL VERIFY THE EXACT LOCATION AND ELECTRICAL REQUIREMENTS OF ALL EQUIPMENT PRIOR TO INSTALLING ANY CONDUIT AND/OR CABLE. IF ELECTRICAL REQUIREMENTS DIFFER FROM THOSE INDICATED, OR IF ADDITIONAL EQUIPMENT IS REQUIRED BY CODE, INFORM THE ENGINEER.
4. WIRING FOR ALL SINGLE PHASE CIRCUITS, 20A OR SMALLER, SHALL BE A MINIMUM OF 2#12 & 1#12 GND in 3/4" CONDUIT, SEE TABLES FOR REQUIRED INCREASED SIZES FOR LONGER RUNS. CIRCUITS FOR DOUBLE SWITCHED LIGHT FIXTURES SHALL INCLUDE ADDITIONAL SWITCHED CONDUCTOR(S) AS REQUIRED.
5. MOUNTING HEIGHTS GIVEN FOR ALL WIRING DEVICES (WALL SWITCHES, RECEPTACLES, ETC.), FIRE ALARM DEVICES, TELEPHONE EQUIPMENT, SPEAKERS AND LIGHT FIXTURES ARE TO THE CENTERLINE OF THE JUNCTION BOX USED TO MOUNT THE DEVICE, UNLESS OTHERWISE NOTED.
6. CIRCUIT WIRING INDICATED ON DRAWINGS IS SCHEMATIC IN NATURE AND SHALL BE ROUTED IN THE FIELD, UNLESS OTHERWISE NOTED.
7. PROVIDE AND ENSURE FIREPROOFING OF ALL CONDUIT, CABLING AND ANY OTHER ELECTRICAL DEVICES THROUGH FIRE RATED ASSEMBLIES.
8. PROVIDE PULL STRINGS IN ALL CONDUIT SYSTEMS LEFT FOR USE BY OTHERS.
9. PROVIDE EXPANSION FITTINGS IN CONDUIT RISERS FROM ALL EXTERIOR UNDERGROUND CONDUITS TO FIXED EQUIPMENT OR CONDUIT FITTINGS AND PROVIDE FLEXIBLE CONNECTIONS TO ANY EQUIPMENT SUBJECT TO SETTLEMENT OR FROST HEAVES.
10. ALL EXPOSED WIRING TO BE RUN IN CONDUIT(EMT) WITH COMPRESSION TYPE FITTINGS.
11. FEEDERS FOR PANELS AND HVAC EQUIPMENT SHALL BE RUN IN EMT.

120V BRANCH CIRCUIT VOLTAGE DROP TABLE	
CIRCUIT LENGTH	120V WIRE SIZE
0'-60'	#12
61'-100'	#10
101'-160'	#8
TABLE IS BASED ON A 120V CIRCUIT LOAD OF 1680 WATTS (14 AMPS).	

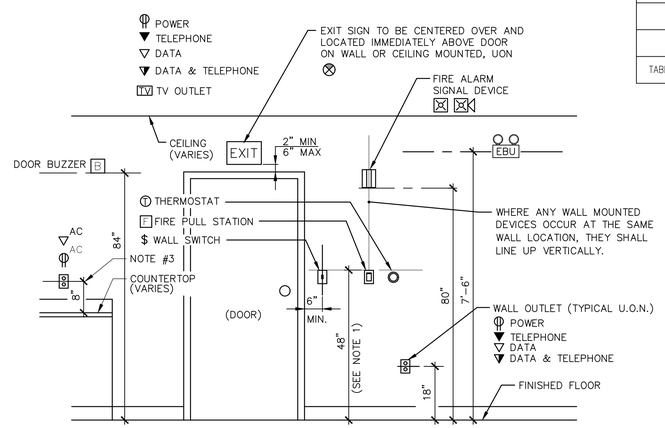

DRAWING NOTES:

1. HEIGHT GIVEN FOR THIS DEVICE IS THE MAXIMUM HEIGHT TO THE HIGHEST OPERABLE PART OF THE DEVICE
2. REFER TO DRAWINGS FOR SPECIFIC DEVICE HEIGHTS.
3. VERIFY LOCATION ABOVE COUNTERS (AC) WITH ARCH. ELEVATIONS.

1 typical device locations
not to scale

ABBREVIATIONS

AFF	ABOVE FINISHED FLOOR	KEC	KITCHEN EQUIPMENT CONTRACTOR
AHU	AIR HANDLING UNIT	MC	MECHANICAL CONTRACTOR
AC	ABOVE COUNTER HEIGHT (INDICATED ADJACENT TO DEVICE)	MH	MOUNTING HEIGHT
AV	AUDIO / VISUAL	NL	NIGHT LIGHT
BC	BELOW COUNTER	NTS	NOT TO SCALE
CLG	CEILING	PC	PLUMBING CONTRACTOR
DWG	DRAWING	RTU	ROOF TOP UNIT
EC	ELECTRICAL CONTRACTOR	TYP	TYPICAL
FAC	FIRE ALARM CONTRACTOR	U.G.	UNDERGROUND
FLR	FLOOR	UON	UNLESS OTHERWISE NOTED
GFI	GROUND FAULT INTERRUPTING	WP	WEATHER PROOF
HP	HORSEPOWER		

DESMAN Design Management

edm
architecture
engineering
management
pittsfield, ma
unionville, ct
chicopee, ma
albany, ny
(888) 336-6500
team@edm-ae.com

Olive Street Parking Facility

Olive Street
Greenfield, MA

CONSTRUCTION DOCUMENTS - BID SET

ISSUE

NO.	DESCRIPTION	DATE
5	CD - Bid Set	09/06/17
2	100% CD	07/10/17

Copyright © 2017 DESMAN, Inc. All rights reserved. No part of these documents may be reproduced in any form or by any means without written permission from DESMAN, Inc.

DRAWING TITLE:
ELECTRICAL SYMBOLS, NOTES AND LEGENDS

DRAWING NO:
E-001

SCALE: NONE
DATE: 09/06/2017
PROJECT NO: 20-16105.01-1

DES.	DRWN.	CHK'D.
EJM	EMC	

LIGHT FIXTURE SCHEDULE

TYPE	MFG	DESCRIPTION
A	CREE LUMINARE: #IG-NM-5S-A-40K-UL-WH-PML MOUNT: #IG-PD-WH	PENDANT MOUNTED LED "GARAGE" FIXTURE – 33W, 4000K, 3910 LUMENS. INTEGRAL CONTROLS/FIXTURE ACTUAL CONDUIT PENDANT TO BE PROVIDED BY EC TO SUIT MOUNTING HEIGHT. MAINTAIN 7'-9" CLEARANCE AFF
B	CREE LUMINARE: #IG-NM-5S-J-40K-UL-WH-PML MOUNT: #IG-PD-WH	PENDANT MOUNTED LED "GARAGE" FIXTURE – 66W, 4000K, 7500 LUMENS. INTEGRAL CONTROLS/FIXTURE ACTUAL CONDUIT PENDANT TO BE PROVIDED BY EC TO SUIT MOUNTING HEIGHT. MAINTAIN 7'-9" CLEARANCE AFF
C	TERON #HRT-L33.6-100-277V-RNG-BK-40K	SURFACE MOUNTED LED FIXTURE – 40W, 4000K, 2130 LUMENS
D	CREE #OSQ-A-NM-5SH-B-57K-UL-PML	POLE MOUNTED DOUBLE HEAD FIXTURE – 86W, 11,678 LUMENS. INTEGRAL CONTROLS/FIXTURE
E	CREE #C-CP-A-SQ-49L-40K-WH	SURFACE MOUNTED LED FIXTURE – 36W, 4000K, 4900 LUMENS. INTEGRAL CONTROLS/FIXTURE. FINISH BY ARCHITECT.
F	TEXAS FLUORESCENTS #OSL-96L-S57W5700L-DMV-40K	LINEAR MESH UP-LIGHTING LED FIXTURE
G	CREE #OSQ-A-B-K-57K-UL-R-WM-4	WALL MOUNTED LED FLOODLIGHT – 130W, 17,000 LUMENS, INTEGRAL PHOTOCELL. PROVIDE L-SHAPED SURFACE BRACKET FOR WALL MOUNTING. FINISH BY ARCHITECT.
H	SPJ LIGHTING #SPJ-LSL-48-MBR-16W-WIDE ANGLE FLOOD-1000-4000K-120V	BAS-RELIEF SURFACE MOUNTED LED
I1	CREE #PWY-EDG-2M-P3-02-E-UL-BZ-S2S-40K	LED, BOLLARD SITE LIGHTING.
⊗	LIGHTALARMS #BAXV-1-R-4X-CW	SURFACE MOUNTED SINGLE FACE LED EXIT SIGN, AC ONLY, 1.2W
INV1	VALUSINE #VS2-1A0100N1	2100W INVERTER

LIGHTING SCHEDULE NOTES:

1. COORDINATE ALL LIGHT FIXTURES WITH EQUIPMENT OF OTHER TRADES AND ARCHITECTURAL REFLECTED CEILING PLAN WHERE APPLICABLE.
2. ELECTRICAL CONTRACTOR IS RESPONSIBLE FOR PROVIDING ALL MOUNTING HARDWARE AND ACCESSORIES FOR A FULLY SECURE AND OPERATIONAL SYSTEM.

PANEL GP1		PROJECT NUMBER	DES-4021
SERVICE RATED	X YES NO	DATE	
ISOLATED GROUND BUS	YES X NO	TYPE	
LOCATION ELEC RM		AIC AND SHORT CIRCUIT RATING	65,000

	DESCRIPTION	CIRCUIT BRKR. SIZE	LTG. kVA	REC. kVA	MOT. kVA	HTG. kVA	MISC. kVA	MISC. kVA	HTG. kVA	MOT. kVA	REC. kVA	LTG. kVA	CIRCUIT BRKR. SIZE	DESCRIPTION	
1	ELEVATOR	100A/3P			10							1.2	20A	LIGHTING LEVEL 1	2
3					10							1.2	20A	LIGHTING LEVEL 2	4
5					10							1.2	20A	LIGHTING LEVEL 3	6
7	ELECTRICAL HEATER 2	30A/2P			1.875								20A	SPARE	8
9					1.875							1	20A	ROOF LIGHTING	10
11	ELECTRICAL HEATER 1	20A/2P			0.95						1		20A	RECEPTACLES SOUTH	12
13					0.95							1.5	20A	INVERTER/NIGHT LIGHTING	14
15	ELEVATOR CAB LIGHTING	20A	0.2					1.2					20A	FIRE ALARM CONTROL PANEL	16
17	ELEC RM RECEPTACLE SOUTH	20A		1							1		20A	RECEPTACLES NORTH	18
19	ELEC RM RECEPTACLE EAST	20A		1				1					20A	TRAFFIC CONTROL GATES	20
21	OLIVE STREET SIGN	20A	0.5					0.5					20A	TV SCREEN	22
23	FUTURE SITE LIGHTING	20A										1.2	20A	MESH UP-LIGHTING	24
25	EAST WALL FLOOD LIGHTING	20A	0.8									0.6	20A	BAS-RELIEF PANEL LIGHTING	26
27	SOUTH WALL OUTSIDE LIGHTING	20A	0.6									0.8	20A	NORTH WALL OUTDOOR FLOOD LIGHTS	28
29	AC-1	20A/2P			0.8						0.2		20A	ELEVATOR MACHINE ROOM RECEPTACLE	30
31					0.8						0.5		20A	STORAGE AND UTILITY RECEPTACLES	32
33	ELEVATOR PIT LIGHTING	20A	0.1							0.5			20A	ELEVATOR DAMPER	34
35	ELEVATOR PIT RECEPTACLE	20A		0.2							0.5		20A	SECURITY CAMERAHEAD END EQUIPMENT	36
37	SECURITY CAMERA IP MODULES	20A		0.5								0.2	20A	INTERNATIONAL PARKING SIGN	38
39		20A											20A		40
41		20A											20A		42
	LEFT SIDE SUB TOTAL		2.2	2.7	37.25	0	0								
	RIGHT SIDE SUB TOTAL							2.7	0	0.5	3.2	8.9			
	CONNECTED SUB TOTAL		11.1	5.9	37.75	0	2.7								
	FUTURE ALLOWANCE		0	0	0	0	0								
	SUB-TOTAL		11.1	5.9	37.75	0	2.7								
	DEMAND FACTOR		1	NEC	1	1	0.6								
	SUB-TOTAL		11.1	5.9	37.75	0	1.62								
	TOTAL PANEL kVA		56.37												
	TOTAL PANEL AMPS		157.02												

NOTES:

CIRCUIT BREAKER TYPE:
S=SHUNT TRIP
G=GFIC
L=LOCK ON HANDLE
H=HACR TYPE
A=AFCI

MAIN BREAKER 200A,3P		VOLTS	120/208
NEUTRAL	(X) 100% ( ) 150% ( ) 200%	PHASE	3
BUS RATING 225A		MOUNTING	

PANEL FUTURE PANEL CCP (NIC)		PROJECT NUMBER	DES-4021
SERVICE RATED	X YES NO	DATE	
ISOLATED GROUND BUS	YES X NO	TYPE	
LOCATION ELEC RM		AIC AND SHORT CIRCUIT RATING	65,000

	DESCRIPTION	CIRCUIT BRKR. SIZE	LTG. kVA	REC. kVA	MOT. kVA	HTG. kVA	MISC. kVA	MISC. kVA	HTG. kVA	MOT. kVA	REC. kVA	LTG. kVA	CIRCUIT BRKR. SIZE	DESCRIPTION	
1	FUTURE CAR CHARGING PEDASTAL 1	40A/2P											40A/2P	FUTURE CAR CHARGING PEDASTAL 1	2
3															4
5	FUTURE CAR CHARGING PEDASTAL 2	40A/2P											40A/2P	FUTURE CAR CHARGING PEDASTAL 2	6
7															8
9	FUTURE CAR CHARGING PEDASTAL 3	40A/2P											40A/2P	FUTURE CAR CHARGING PEDASTAL 3	10
11															12
13	FUTURE CAR CHARGING PEDASTAL 4	40A/2P											40A/2P	FUTURE CAR CHARGING PEDASTAL 4	14
15															16
17	FUTURE CAR CHARGING PEDASTAL 5	40A/2P											40A/2P	FUTURE CAR CHARGING PEDASTAL 5	18
19															20
21	FUTURE CAR CHARGING PEDASTAL 6	40A/2P											40A/2P	FUTURE CAR CHARGING PEDASTAL 6	22
23															24
25	FUTURE CAR CHARGING PEDASTAL 7	40A/2P											40A/2P	FUTURE CAR CHARGING PEDASTAL 7	26
27															28
29	FUTURE CAR CHARGING PEDASTAL 8	40A/2P											40A/2P	FUTURE CAR CHARGING PEDASTAL 8	30
31															32
33															34
35															36
37															38
39															40
41															42
	LEFT SIDE SUB TOTAL		0	0	0	0	0								
	RIGHT SIDE SUB TOTAL							0	0	0	0	0			
	CONNECTED SUB TOTAL		0	0	0	0	0								
	FUTURE ALLOWANCE		0	0	0	0	0								
	SUB-TOTAL		0	0	0	0	0								
	DEMAND FACTOR		1	NEC	1	1	0.6								
	SUB-TOTAL		0	0	0	0	0								
	TOTAL PANEL kVA			0											
	TOTAL PANEL AMPS		0.00												

NOTES:

CIRCUIT BREAKER TYPE:
S=SHUNT TRIP
G=GFIC
L=LOCK ON HANDLE
H=HACR TYPE
A=AFCI

MAIN BREAKER 400A,3P		VOLTS	120/208
NEUTRAL	(X) 100% ( ) 150% ( ) 200%	PHASE	3
BUS RATING 400A		MOUNTING	

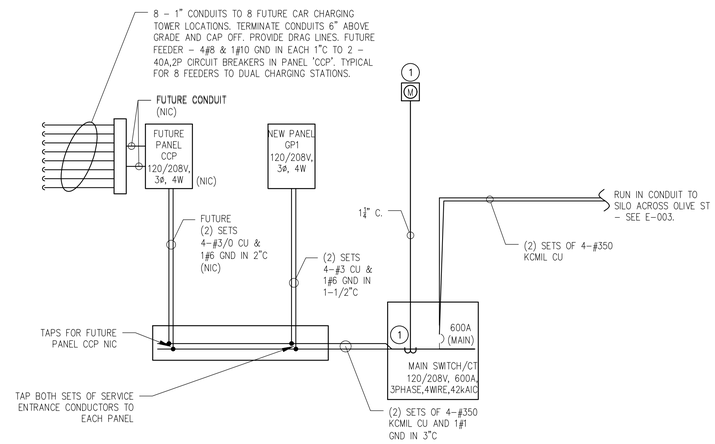

1 power riser diagram
n.t.s.

electrical riser general notes

1. REFER TO PANEL SCHEDULES FOR PANELBOARD SPECIFICATIONS AND LOADS
2. REFER TO FLOOR PLANS FOR EXACT LOCATIONS OF PANELS AND DEVICES.

electrical riser keyed notes

1. NEW METER AND C.T. CABINET. PROVIDE AND INSTALL PER UTILITY REQUIREMENTS.

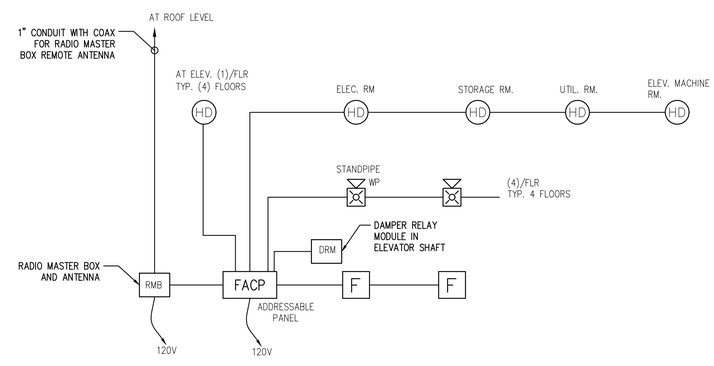

2 fire alarm riser diagram
n.t.s.

fire alarm riser general notes

1. RADIO MASTER BOX TO BE AES – #7706-ULF PER TOWN OF GREENFIELD FIRE DEPARTMENT REQUIREMENTS. (REP. – EASTON ELECTRONICS – 800-879-3117)
2. PROVIDE REMOTE ANTENNA AT ROOF LEVEL OF GARAGE MOUNTED ABOVE STAIRWELL ROOF.

DESMAN Design Management

edm
architecture • engineering • management
pittsfield, ma
unionville, ct
chicopee, ma
albany, ny
(888) 336-6500
team@edm-ae.com

Olive Street Parking Facility

Olive Street
Greenfield, MA

CONSTRUCTION DOCUMENTS - BID SET

ISSUE

NO.	DESCRIPTION	DATE
5	CD - Bid Set	09/06/17
2	100% CD	07/10/17

Copyright © 2017 DESMAN, Inc. All rights reserved. No part of these documents may be reproduced in any form or by any means without written permission from DESMAN, Inc.

DRAWING TITLE:
ELECTRICAL SCHEDULES AND RISERS

DRAWING NO:
E-002

SCALE: NONE
DATE: 09/06/2017
PROJECT NO: 20-16105.01-1

DES.	DRWN.	CHK'D.
EJM	EMC	

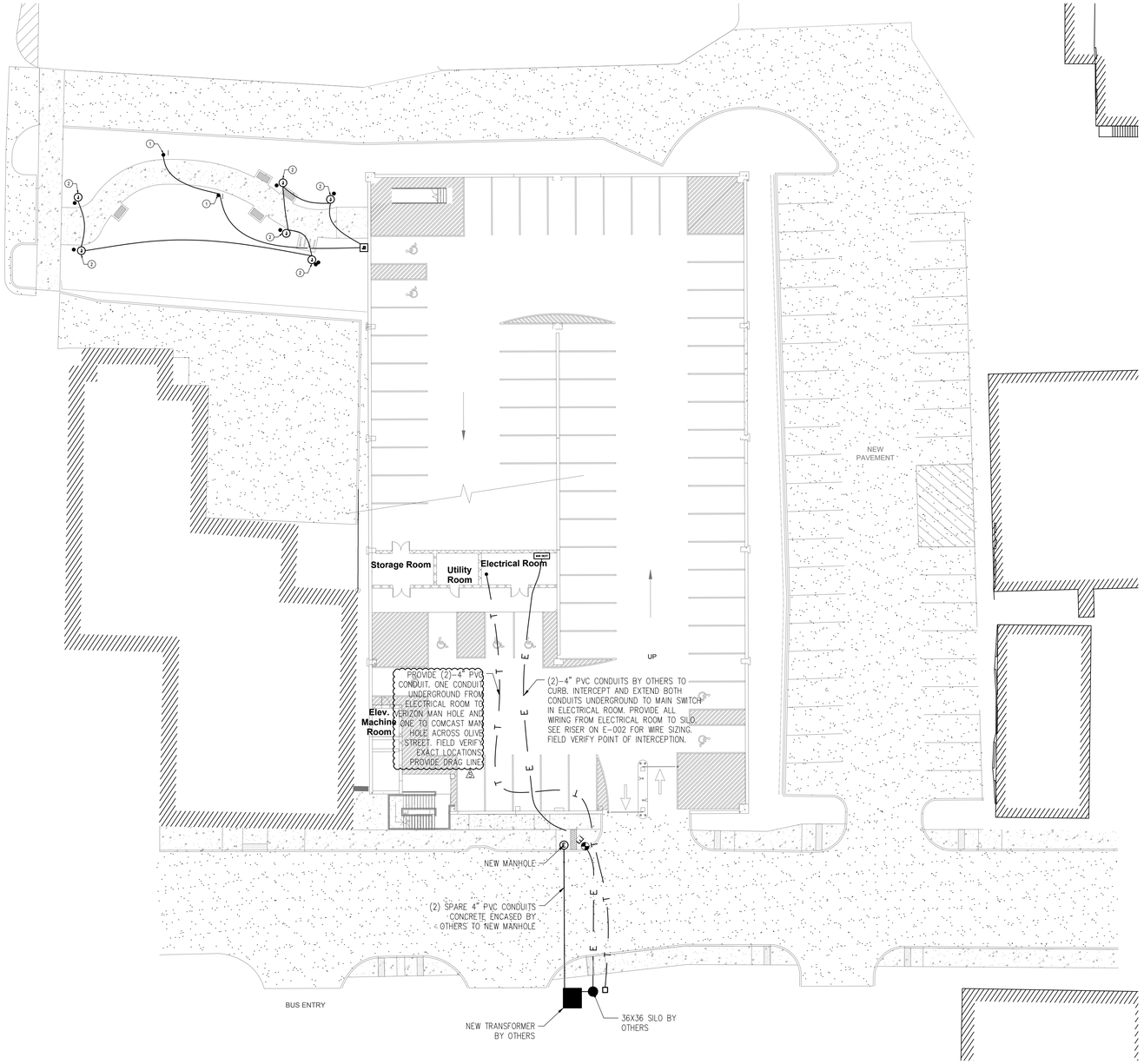

1 electrical site plan
1" = 20'-0"

new work keyed notes

1. PROVIDE 2#10 & 1#10 GND IN 1"C FROM JUNCTION BOX TO (2) NEW SITE LIGHTING FIXTURES. COORDINATE LOCATION OF LIGHTING FIXTURES. SEE E-002 FOR LIGHTING FIXTURE SCHEDULE AND E-111 FOR CIRCUIT INFORMATION.
2. PROVIDE 1" CONDUIT FROM JUNCTION BOX TO NEW HANDHOLE FOR CONNECTION TO FUTURE LIGHTING. LIGHTING FIXTURES ARE NIC.

DESMAN Design Management

edm
architecture
engineering
management
pittsfield, ma
unionville, ct
chicopee, ma
albany, ny
(888) 336-6500
team@edm-ae.com

Olive Street Parking Facility

Olive Street
Greenfield, MA

CONSTRUCTION DOCUMENTS - BID SET

ISSUE

NO.	DESCRIPTION	DATE
5	CD - Bid Set	09/06/17
2	100% CD	07/10/17

Copyright © 2017 DESMAN, Inc. All rights reserved. No part of these documents may be reproduced in any form or by any means without written permission from DESMAN, Inc.

DRAWING TITLE:
ELECTRICAL SITE PLAN

DRAWING NO:
E-003

SCALE: AS NOTED
DATE: 09/06/2017
PROJECT NO: 20-16105.01-1

DES.	DRWN.	CHK'D.
EJM	EMC	

new work general notes

1. ALL EXIT SIGNS TO BE TIED TO LOCAL NIGHT LIGHT CIRCUIT.
2. ALL BRANCH WIRING TO BE 2#12 & 1#12 GND IN 3/4"C UNLESS OTHERWISE NOTED.
3. COORDINATE ALL WORK IN THE ELEVATOR MACHINE ROOM, SHAFT, AND PIT WITH ELEVATOR EQUIPMENT SUPPLIER AND CONTRACTOR PRIOR TO START OF WORK.
4. SEE DRAWING E-141 FOR SECURITY CAMERA RISER WITH CONDUIT SIZES.

new work keyed notes

1. ALL NIGHT LIGHT FIXTURES ON THIS LEVEL (EXCLUDING STAIRWELLS) TO BE TIED TO INV1-#1
2. PROVIDE POWER AND DATA FOR TV MONITOR IN WALL. COORDINATE MOUNTING HEIGHT WITH ARCHITECT.
3. PROVIDE WEATHERPROOF JUNCTION BOX AT 18" AFF FOR FUTURE CONNECTION TO BOLLARD TYPE SITE LIGHTING. PROVIDE 2#10 & 1#12 GND FROM PANEL GP1-#23 TO JB.
4. UP-LIGHTING FOR MESH SCREEN. SEE ARCHITECTURAL PLANS. CIRCUIT TO PANEL GP1-#24
5. PROVIDE JUNCTION BOX FOR TYPE 'H' SURFACE MOUNTED LIGHTING FOR BAS-RELIEF SECTION. SEE ARCHITECTURAL PLANS FOR BAS-RELIEF MOUNTING DETAILS AND LOCATIONS. CIRCUIT TO PANEL GP1-#26
6. PROVIDE 240V, 30A, 2-POLE DISCONNECT SWITCH AT AC-1 UNIT OUTSIDE WITH 2#12 & 1#12 GND IN 3/4"C TO 2-POLE C/B IN PANEL GP1. COORDINATE WITH MC.
7. SEE ELECTRICAL ROOM PARTIAL PLAN ON THIS SHEET FOR ALL ELECTRICAL EQUIPMENT TO BE PROVIDED IN THIS ROOM.
8. CONDUIT TO BE MOUNTED TO RUN FROM CEILING DOWN AT ALL LEVELS AND USE CHASE ADJACENT TO ELECTRICAL ROOM. REFER TO SPEC SECTION 16130 3.2K FOR REQUIREMENTS.
9. PROVIDE DEDICATED BRANCH CIRCUIT FROM LIGHTING INVERTER TO SERVE ELEVATOR MACHINE ROOM FIXTURE.
10. PROVIDE THE FOLLOWING IN THE ELEVATOR PIT:
    - (2) JELLYJAR LED VAPORPROOF WALL MOUNT LIGHT FIXTURES, RAB LIGHTING MODEL NUMBER #VXBRLED261DG. PROVIDE LIGHT SWITCH IN THE PIT LOCATED ADJACENT TO STAIRS AND 120V, 20A, 1-PHASE DEDICATED CIRCUIT FOR LIGHTS, SERVED FROM PANEL GP-1. REFER TO PANELBOARD SCHEDULE FOR ADDITIONAL INFORMATION.
    - (1) 20A GFI DUPLEX RECEPTACLE ON DEDICATED CIRCUIT, SERVED FROM PANEL GP-1. REFER TO PANELBOARD SCHEDULE FOR ADDITIONAL INFORMATION.
11. STUB UP CONDUIT AND CAP FOR FUTURE DUAL CAR CHARGING PEDESTALS(TYPICAL OF 8 PEDESTALS). COORDINATE EXACT LOCATIONS PRIOR TO INSTALLATION.
12. NEW DAMPER IN ELEVATOR SHAFT. PROVIDE 120V TO JUNCTION BOX FOR DAMPER AND WIRE TO 120V RATED RELAY. PROVIDE FIRE ALARM MODULE TO INTERFACE DAMPER WITH HEAT DETECTOR IN SHAFT.
13. SECURITY CAMERA HEAD END EQUIPMENT BY OTHERS(SEC). ALL SECURITY CONDUIT TO TERMINATE AT THIS LOCATION.
14. FIELD VERIFY LOCATION OF ALL SECURITY CAMERA OUTLETS PRIOR TO INSTALLATION WITH CAMERA SYSTEM PROVIDER.
15. WEATHERPROOF CAMERA OUTLET AT CANOPY.
16. WEATHERPROOF CAMERA OUTLET AT 10' ABOVE GRADE.
17. PROVIDE 2#12 AND 1#12 GND IN 3/4"C FOR ILLUMINATED PARKING SIGN. COORDINATE MOUNTING HEIGHT WITH ARCHITECT.

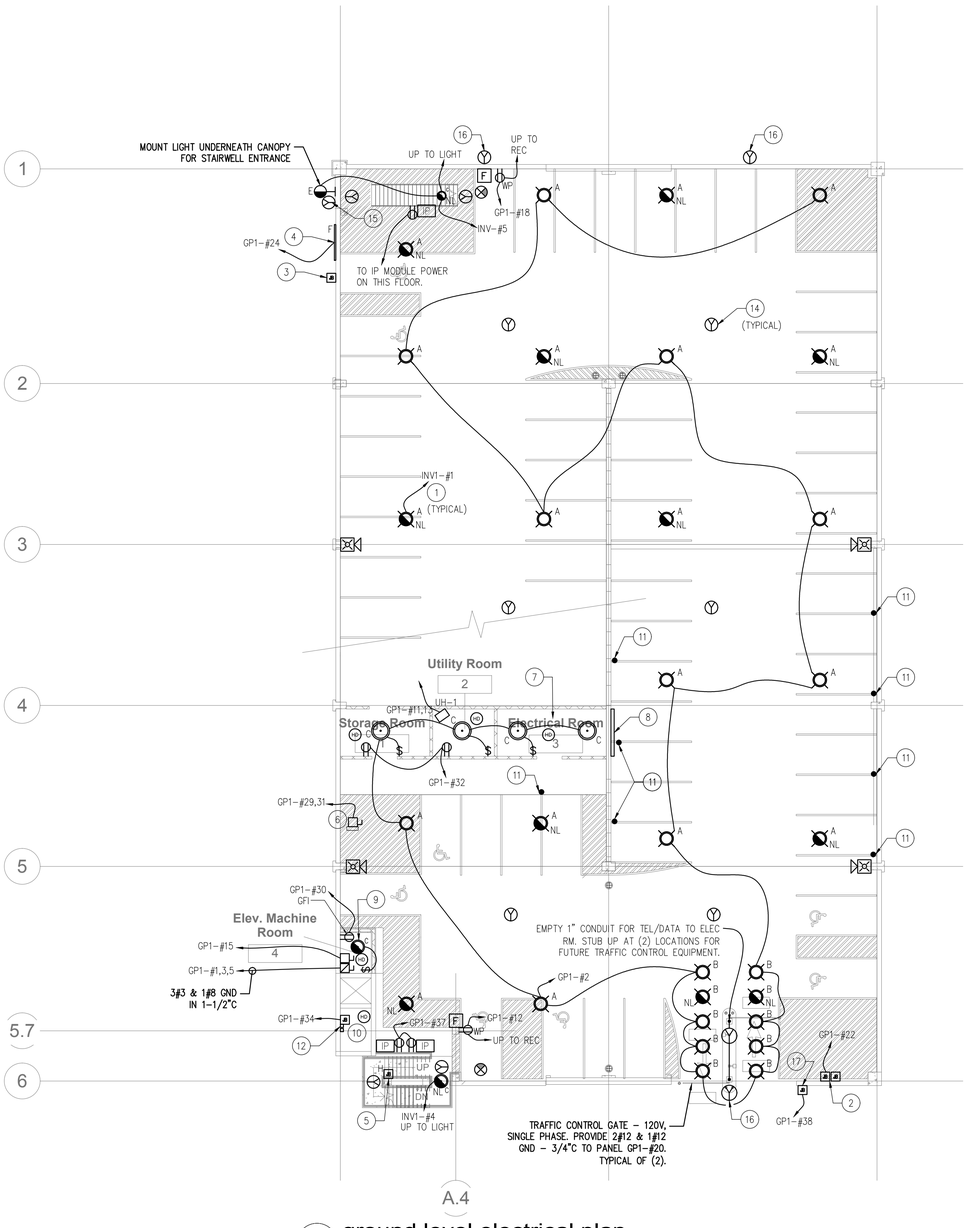

1 ground level electrical plan
1/16"=1'-0"

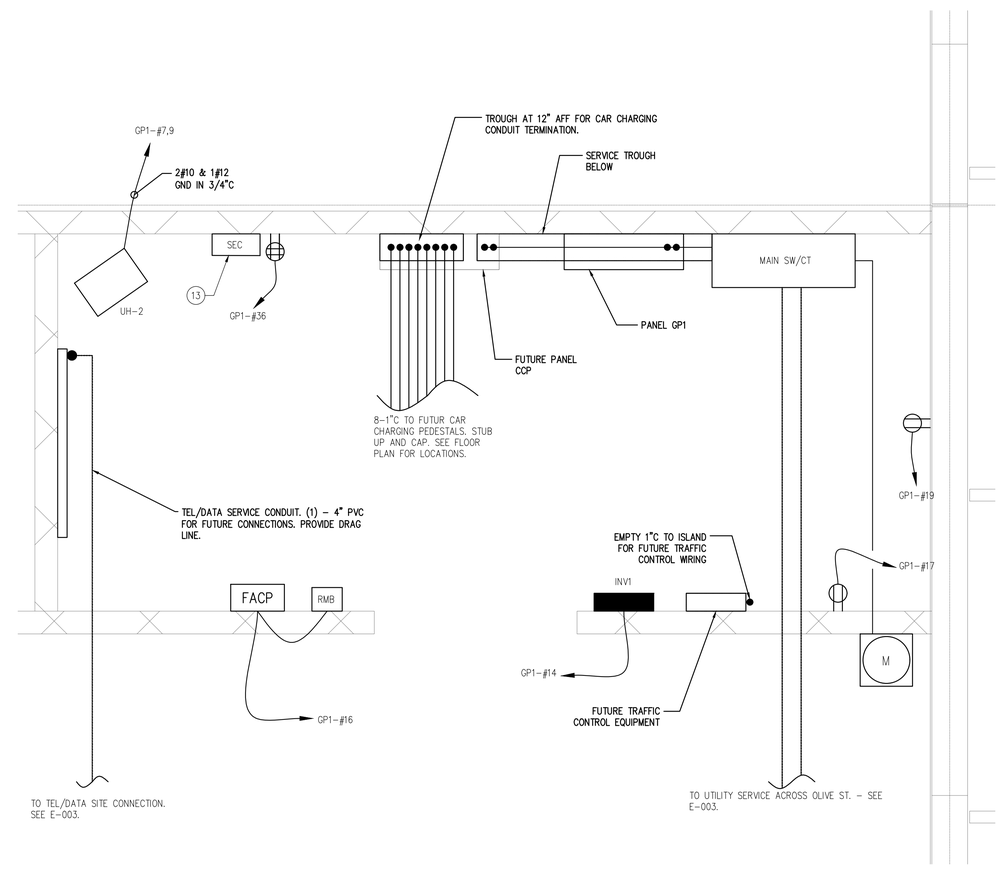

2 ground level electrical room partial plan
1/2"=1'-0"

DESMAN Design Management

edm
architecture • engineering • management
pittsfield, ma
unionville, ct
chicopee, ma
albany, ny
(888) 336-6500
team@edm-ae.com

Olive Street Parking Facility

Olive Street
Greenfield, MA

CONSTRUCTION DOCUMENTS - BID SET

ISSUE

NO.	DESCRIPTION	DATE
5	CD - Bid Set	09/06/17
2	100% CD	07/10/17

Copyright © 2017 DESMAN, Inc. All rights reserved. No part of these documents may be reproduced in any form or by any means without written permission from DESMAN, Inc.

DRAWING TITLE:
ELECTRICAL GROUND LEVEL PLAN

DRAWING NO:
E-111

SCALE: AS NOTED
DATE: 09/06/2017
PROJECT NO: 20-16105.01-1

DES.	DRWN.	CHK'D.
EJM	EMC	

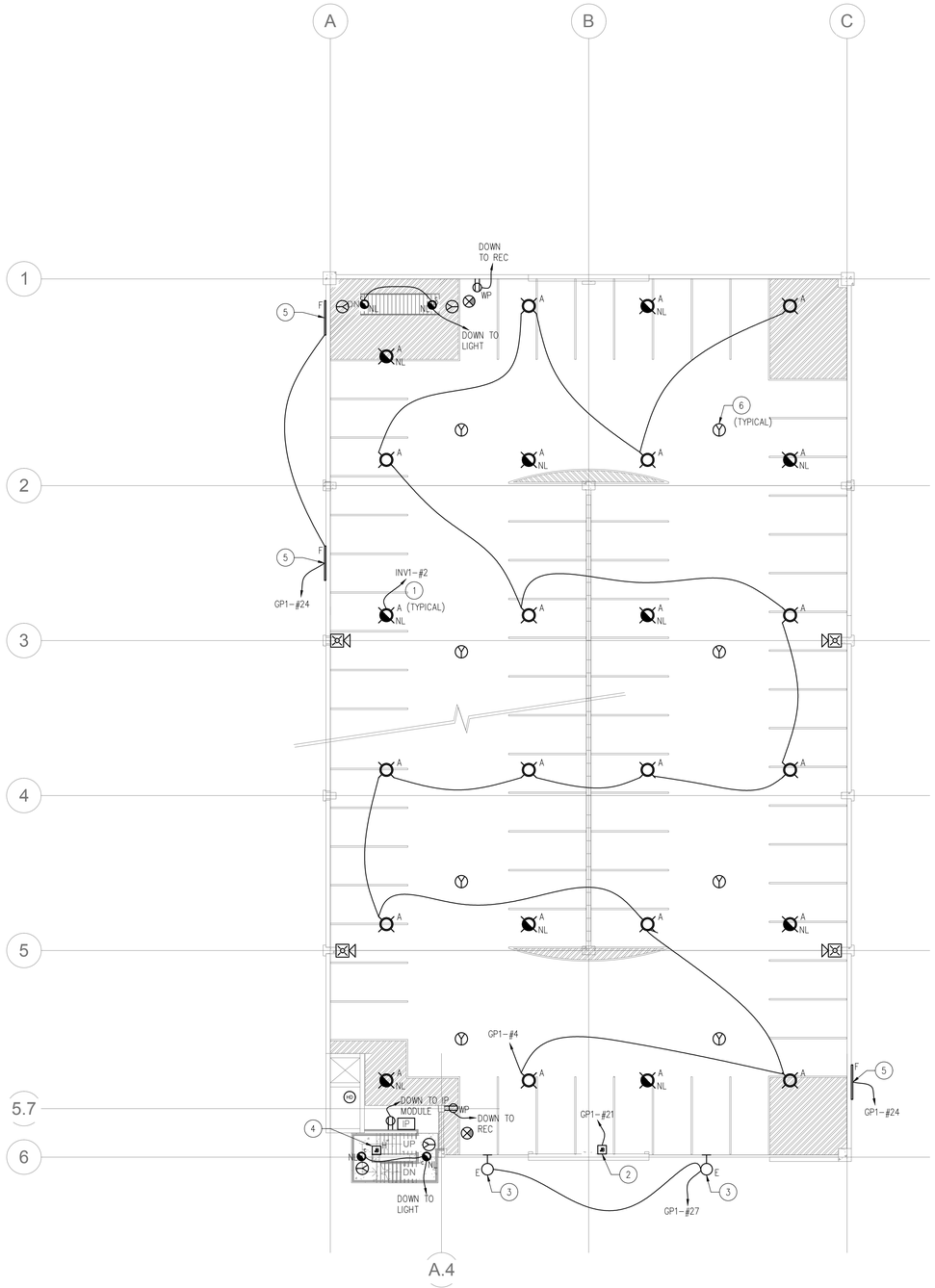

1 2nd level electrical plan
1/16"=1'-0"

new work general notes

1. ALL EXIT SIGNS TO BE TIED TO LOCAL NIGHT LIGHT CIRCUIT.
2. ALL BRANCH WIRING TO BE 2#12 & 1#12 GND IN 3/4"C UNLESS OTHERWISE NOTED.
3. CONDUIT TO BE MOUNTED TO RUN FROM CEILING DOWN AT ALL LEVELS AND USE CHASE ADJACENT TO ELECTRICAL ROOM.
4. SEE DRAWING E-141 FOR SECURITY CAMERA RISER WITH CONDUIT SIZES.

new work keyed notes

1. ALL NIGHT LIGHT FIXTURES ON THIS LEVEL (EXCLUDING STAIRWELLS) TO BE TIED TO INV1-#2
2. PROVIDE JUNCTION BOX FOR BACK-LIT LETTERING OUTSIDE ABOVE ENTRANCE TO THE STAIRWELL.
3. MOUNT LIGHT AND RUN CONDUIT FOR LIGHT BELOW FLOOR LINE AND BETWEEN T'S. SEE ARCHITECTURAL PLANS.
4. PROVIDE JUNCTION BOX FOR TYPE 'H' SURFACE MOUNTED LIGHTING FOR BAS-RELIEF SECTION. SEE ARCHITECTURAL PLANS FOR BAS-RELIEF MOUNTING DETAILS AND LOCATIONS. CIRCUIT TO PANEL GP1-#26
5. UP-LIGHTING FOR MESH SCREEN. SEE ARCHITECTURAL PLANS. CIRCUIT TO PANEL GP1-#24.
6. FIELD VERIFY LOCATION OF ALL SECURITY CAMERA OUTLETS PRIOR TO INSTALLATION WITH CAMERA SYSTEM PROVIDER.

DESMAN
Design Management

edm
architecture
engineering
management
pittsfield, ma
uncasville, ct
chicopee, ma
albany, ny
(888) 336-6500
team@edm-ae.com

Olive Street Parking Facility

Olive Street
Greenfield, MA

CONSTRUCTION DOCUMENTS - BID SET

ISSUE

NO.	DESCRIPTION	DATE
5	CD - Bid Set	09/06/17
2	100% CD	07/10/17

Copyright © 2017 DESMAN, Inc. All rights reserved. No part of these documents may be reproduced in any form or by any means without written permission from DESMAN, Inc.

DRAWING TITLE:
ELECTRICAL SECOND LEVEL PLAN

DRAWING NO:
E-121

SCALE: 1/16" = 1'-0"
DATE: 09/06/2017
PROJECT NO: 20-16105.01-1

DES.	DRWN.	CHK'D.
EJM	EMC	

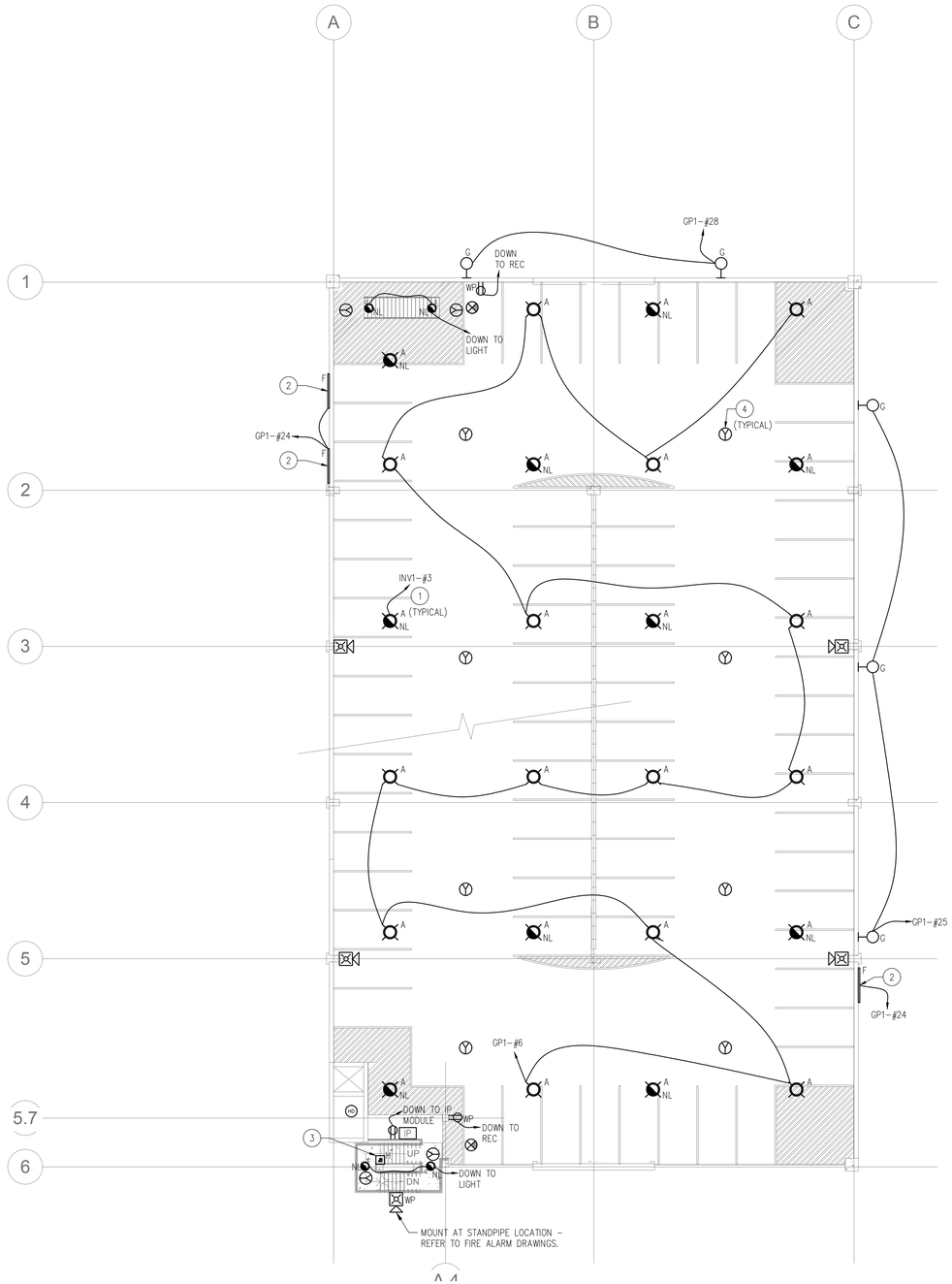

1 3rd level electrical plan
1/16"=1'-0"

new work general notes

1. ALL EXIT SIGNS TO BE TIED TO LOCAL NIGHT LIGHT CIRCUIT.
2. ALL BRANCH WIRING TO BE 2#12 & 1#12 GND IN 3/4"C UNLESS OTHERWISE NOTED.
3. CONDUIT TO BE MOUNTED TO RUN FROM CEILING DOWN AT ALL LEVELS AND USE CHASE ADJACENT TO ELECTRICAL ROOM.
4. SEE DRAWING E-141 FOR SECURITY CAMERA RISER WITH CONDUIT SIZES.

new work keyed notes

1. ALL NIGHT LIGHT FIXTURES ON THIS LEVEL (EXCLUDING STAIRWELLS) TO BE TIED TO INV1-#3
2. UP-LIGHTING FOR MESH SCREEN. SEE ARCHITECTURAL PLANS. CIRCUIT TO PANEL GP1-#24.
3. PROVIDE JUNCTION BOX FOR TYPE 'H' SURFACE MOUNTED LIGHTING FOR BAS-RELIEF SECTION. SEE ARCHITECTURAL PLANS FOR BAS-RELIEF MOUNTING DETAILS AND LOCATIONS. CIRCUIT TO PANEL GP1-#26
4. FIELD VERIFY LOCATION OF ALL SECURITY CAMERA OUTLETS PRIOR TO INSTALLATION WITH CAMERA SYSTEM PROVIDER.

DESMAN Design Management

edm
architecture
engineering
management
pittsfield, ma
uniionville, ct
chicopee, ma
albany, ny
(888) 336-6500
team@edm-ae.com

Olive Street Parking Facility

Olive Street
Greenfield, MA

CONSTRUCTION DOCUMENTS - BID SET

ISSUE

NO.	DESCRIPTION	DATE
5	CD - Bid Set	09/06/17
2	100% CD	07/10/17

Copyright © 2017 DESMAN, Inc. All rights reserved. No part of these documents may be reproduced in any form or by any means without written permission from DESMAN, Inc.

DRAWING TITLE:
ELECTRICAL THIRD LEVEL PLAN

DRAWING NO:
E-131

SCALE: 1/16" = 1'-0"
DATE: 09/06/2017
PROJECT NO: 20-16105.01-1

DES.	DRWN.	CHK'D.
EJM	EMC	

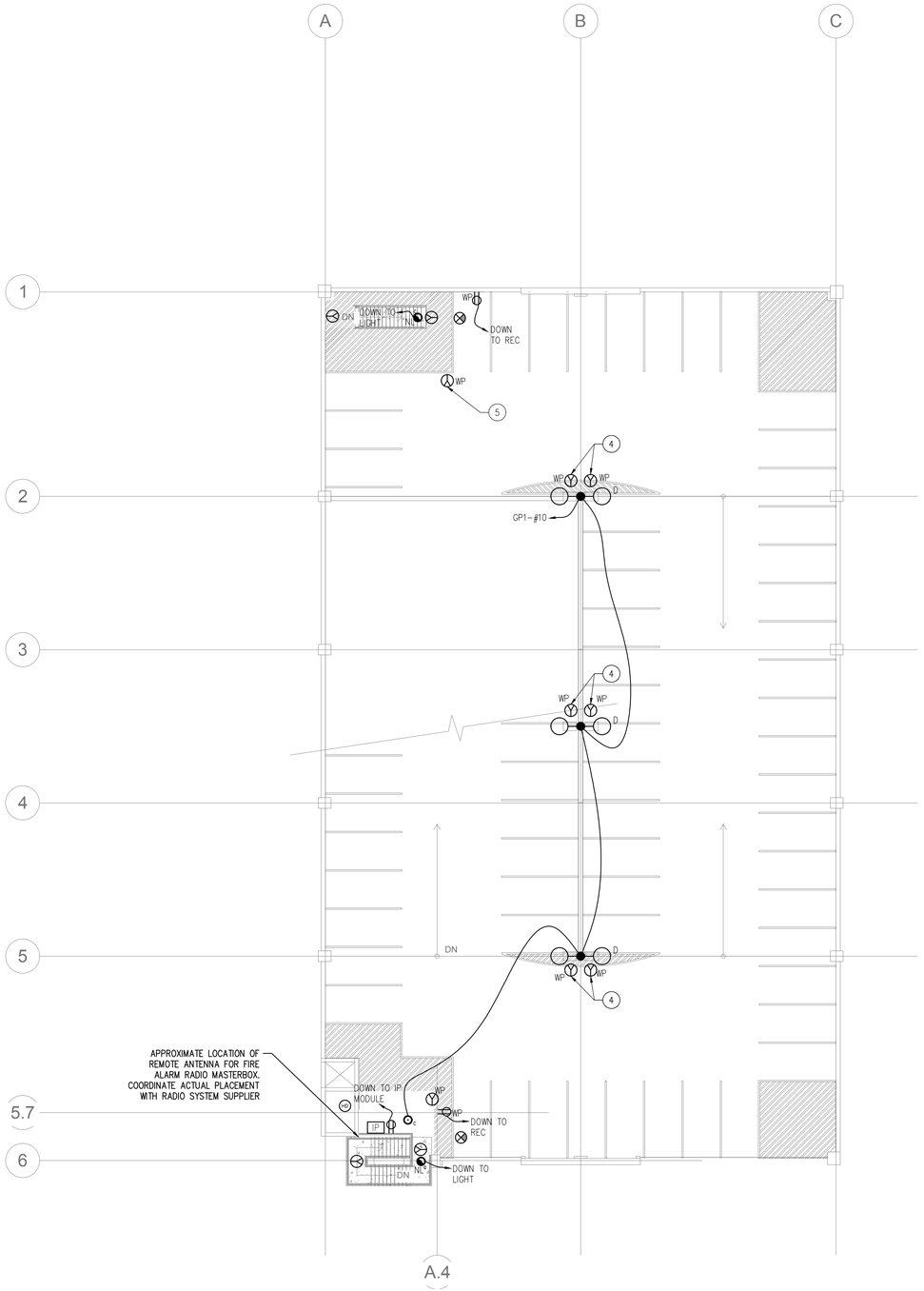

1 roof level electrical plan
1/16"=1'-0"

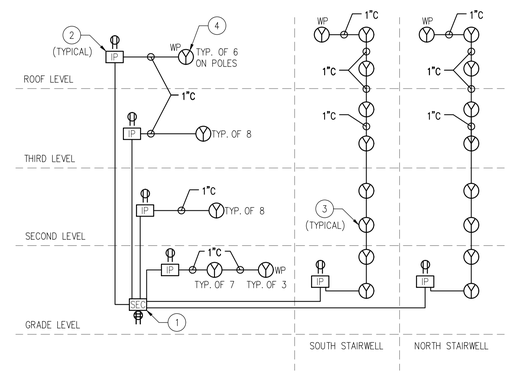

2 security camera riser diagram
n.t.s.

new work keyed notes

1. CAMERA HEAD END EQUIPMENT (SEC) BY OTHERS. EC TO PROVIDE POWER AND EMPTY CONDUIT XXXX.
2. SECURITY CAMERA IP CONTROL MODULES. 1 PER FLOOR AND 1 PER STAIRWELL PROVIDED BY OTHERS. EC TO PROVIDE 120V RECEPTACLE AT EACH LOCATION. SEE PLANS.
3. CAMERA OUTLET. EC TO PROVIDE 4"X4" JB AND 1" CONDUIT TO IP LOCATION AS NOTED. FIELD VERIFY LOCATION OF ALL SECURITY CAMERA OUTLETS PRIOR TO INSTALLATION WITH CAMERA SYSTEM PROVIDER. TYPICAL FOR EACH CAMERA OUTLET.
4. CAMERA OUTLETS. TWO PER POLE AT 10' ABOVE ROOF LEVEL.

new work general notes

1. ALL EXIT SIGNS TO BE TIED TO LOCAL NIGHT LIGHT CIRCUIT.
2. ALL BRANCH WIRING TO BE 2#12 & 1#12 GND IN 3/4"C UNLESS OTHERWISE NOTED.
3. CONDUIT TO BE MOUNTED TO RUN FROM CEILING DOWN AT ALL LEVELS AND USE CHASE ADJACENT TO ELECTRICAL ROOM.
4. SEE SECURITY CAMERA RISER ON THIS DRAWING FOR CONDUIT SIZES. ALL SECURITY CAMERA CONDUIT IS 1-1/2"C UON. PROVIDE DRAG LINE IN ALL EMPTY CONDUIT.

DESMAN Design Management
edm
architecture • engineering • management
pittsfield, ma
unionville, ct
chicopee, ma
albany, ny
(888) 336-6500
team@edm-ae.com

Olive Street Parking Facility

Olive Street
Greenfield, MA

CONSTRUCTION DOCUMENTS - BID SET

ISSUE

NO.	DESCRIPTION	DATE
5	CD - Bid Set	09/06/17
2	100% CD	07/10/17

Copyright © 2017 DESMAN, Inc. All rights reserved. No part of these documents may be reproduced in any form or by any means without written permission from DESMAN, Inc.

DRAWING TITLE:
ELECTRICAL ROOF LEVEL PLAN

DRAWING NO:
E-141

SCALE: 1/16" = 1'-0"
DATE: 09/06/2017
PROJECT NO: 20-16105.01-1

DES.	DRWN.	CHK'D.
EJM	EMC	

LEGEND

- CLASS I STANDPIPE CONNECTION. PROVIDE 2½" HOSE CONNECTION WITH 1½" REDUCER AND CAP. COORDINATE HOSE CONNECTION THREAD REQUIREMENTS WITH LOCAL FIRE DEPARTMENT.
- CLASS I ROOFTOP STANDPIPE CONNECTION. PROVIDE TWO – 2½" HOSE CONNECTIONS WITH 1½" REDUCERS AND CAPS. COORDINATE HOSE CONNECTION THREAD REQUIREMENTS WITH LOCAL FIRE DEPARTMENT.
- FDC (STORZ CONNECTION WITH 30 DEGREE ANGLE DOWN). COORDINATE FINAL SIZE, TYPE AND LOCATION WITH LOCAL FIRE DEPARTMENT. PROVIDE CHECK VALVE WITH AUTOMATIC BALL DRIP ON DROP TO FDC. FDC SHALL BE LOCATED WITHIN 100 FEET OF A FIRE HYDRANT.
- O.S.&Y. GATE VALVE WITH TAMPER SWITCH. LOCK VALVE IN THE OPEN POSITION. PROVIDE AUXILIARY DRAIN ON THE DOWNSTREAM SIDE OF EACH GATE VALVE.
- STANDPIPE PIPING
- (E) FIRE EXTINGUISHER LOCATED IN SURFACE MOUNTED CABINET. FIRE EXTINGUISHER SHALL BE MINIMUM 6 POUNDS, WITH A 3A:40B:C RATING (GUARDIAN MODEL #4006 OR EQUAL). EXTINGUISHER CABINET SHALL BE GUARDIAN MODEL #1850 OR EQUAL. EXTINGUISHERS SHALL BE MOUNTED ALONG WALL, SOME EXTINGUISHER LOCATIONS ON PLANS HAVE BEEN OFFSET FOR CLARITY WITH STANDPIPE PIPE ROUTING.

FDC – FIRE DEPARTMENT CONNECTION
GPM – GALLONS PER MINUTE
TYP – TYPICAL

TESTING

1. AFTER COMPLETING THE BRANCH PIPING SYSTEM, THE CONTRACTOR SHALL HYDROSTATICALLY TEST THE FIRE SPRINKLER PIPING FOR A PERIOD OF TWO HOURS AT NOT LESS THAN 200 PSI, OR AT 50 PSI IN EXCESS OF THE MAXIMUM OPERATING STATIC PRESSURE WHEN THE STATIC PRESSURE IS IN EXCESS OF 150 PSI. THE CONTRACTOR SHALL CHECK THE SYSTEM FOR LEAKS AND MEASURE THE HYDROSTATIC PRESSURE AT THE LOW POINT OF EACH SYSTEM OR ZONE BEING TESTED.
2. THE CONTRACTOR SHALL REPAIR OR REPLACE PIPING AND FITTINGS AS REQUIRED TO ELIMINATE LEAKS IN ACCORDANCE WITH ANSI/NFPA STANDARDS FOR "LITTLE OR NO LEAKS" AND RETEST AS SPECIFIED TO DEMONSTRATE COMPLIANCE.
3. UPON SATISFACTORY COMPLETION AND TESTING OF THE BRANCH PIPING SYSTEM, THE CONTRACTOR SHALL PROVIDE THE OWNER WITH A LETTER CERTIFYING THAT THE BRANCH PIPING SYSTEM HAS BEEN COMPLETED IN ACCORDANCE WITH ANSI/NFPA 13 STANDARDS AND IS OPERATIONAL, COMPLETE AND WITHOUT DEFECTS.

SCOPE OF WORK

1. PROVIDE A CLASS I MANUAL DRY STANDPIPE SYSTEM IN ACCORDANCE WITH NFPA–14.
2. PROVIDE PRODUCT SUBMITTALS, SHOP DRAWINGS AND HYDRAULIC CALCULATIONS FOR REVIEW AND APPROVAL IN ACCORDANCE WITH NFPA–14. REFER TO THE HYDRAULIC CALCULATIONS NOTES FOR ADDITIONAL INFORMATION.
3. PROVIDE HANGING AND BRACING IN ACCORDANCE WITH NFPA–13 AND NFPA–14.
4. ALL VALVES SHALL BE LOCKED IN THE OPEN POSITION WITH LOCK AND CHAIN. COORDINATE LOCK AND KEY REQUIREMENTS WITH OWNER'S REPRESENTATIVE.
5. PROVIDE FIRE EXTINGUISHERS IN SURFACE MOUNTED CABINETS AS INDICATED ON PLANS AND IN ACCORDANCE WITH NFPA–1–. FIRE EXTINGUISHERS SHALL BE MINIMUM 6 POUNDS WITH A MINIMUM 3A:40B:C RATING. THE MAXIMUM TRAVEL DISTANCE FROM ANY POTION OF THE BUILDING TO A FIRE EXTINGUISHER SHALL BE 50 FEET. THE COVERAGE AREA OF A FIRE EXTINGUISHER SHALL NOT EXCEED 4,500 SQUARE FEET.
6. UPON REQUEST, CONTRACTOR SHALL PROVIDE RED–LINE DRAWINGS AND/OR AS–BUILT DRAWINGS. DRAWINGS SHALL BE AVAILABLE IN PDF AND AUTOCAD FORMATS.
7. UPON REQUEST OF LOCAL CODE ENFORCEMENT OFFICIALS OR PERMITTING AGENCY, CONTRACTOR SHALL PROVIDE SHOP DRAWINGS AND HYDRAULIC CALCULATIONS WHICH HAVE BEEN REVIEWED BY, AND SIGNED AND SEALED BY A THIRD PARTY LICENSED PROFESSIONAL ENGINEER. CONTRACTOR SHALL BEAR ALL COSTS ASSOCIATED WITH THE THIRD PARTY PROFESSIONAL ENGINEER REVIEW AND SIGNING/SEALING OF SHOP DRAWINGS/HYDRAULIC CALCULATIONS.

STANDPIPE HYDRAULIC CALCULATIONS

1. CONTRACTOR SHALL SUBMIT HYDRAULIC CALCULATIONS FOR REVIEW AND APPROVAL AS DESCRIBED IN THIS SECTION.
2. PERFORM HYDRAULIC CALCULATION FOR THE MANUAL–DRY STANDPIPE SYSTEM. CALCULATIONS SHALL PROVIDE 250 GPM AT 100 PSI AT THE HYDRAULICALLY REMOTE HOSE CONNECTION, 500 GPM AT THE HYDRAULICALLY MOST REMOTE STANDPIPE RISER, AND SHALL FLOW A TOTAL OF 1000 GPM IN THE STANDPIPE SYSTEM. THE REQUIRED PRESSURE AND FLOW SHALL BE PROVIDED BY THE FIRE DEPARTMENT AT THE FDC AND THE TOTAL DEMAND PRESSURE SHALL NOT EXCEED 150 PSI.
3. C–FACTOR OF 100 SHALL BE USED FOR DRY PIPE STANDPIPE SYSTEM.
4. CONTRACTOR IS RESPONSIBLE TO PROVIDE ADDITIONAL HYDRAULIC CALCULATIONS, AS REQUESTED, DURING THE SUBMITTAL, REVIEW AND PUMP INSTALLATION PROCESS.

STANDPIPE NOTES

1) THE STANDPIPE SCOPE OF WORK INCLUDES PROVIDING CLASS I HOSE CONNECTIONS IN ALL SCOPE OF WORK AREAS AND PROVIDING A MANUAL–DRY STANDPIPE SYSTEM THROUGHOUT ALL SCOPE OF WORK AREAS.
2) THE MANUAL–DRY STANDPIPE SYSTEM HAS BEEN DESIGNED TO PROVIDE 250 GPM AT 100 PSI AT THE HYDRAULICALLY REMOTE HOSE CONNECTION(S). THE SYSTEM HAS BEEN DESIGNED TO FLOW 500 GPM IN THE MOST REMOTE STANDPIPE, AND UP TO A TOTAL FLOW OF 1000 GPM WITHIN THE BUILDING. FINAL FLOW AND PRESSURE REQUIREMENTS BASED ON CONTRACTOR'S HYDRAULIC CALCULATIONS.
3) A MANUAL–DRY STANDPIPE SYSTEM WILL BE INSTALLED THROUGHOUT THE BUILDING.
4) THE HYDRAULIC DESIGN WAS PERFORMED IN COMPLIANCE WITH NFPA–14, "STANDARD FOR THE INSTALLATION OF STANDPIPE AND HOSE SYSTEMS."
5) THE STANDPIPES WITHIN THE SCOPE OF WORK SHALL MEET THE REQUIREMENTS OF A MANUAL–DRY CLASS I STANDPIPE SYSTEM LOCATED IN A NON–SPRINKLERED BUILDING.
6) A CHECK VALVE WITH A BALL DRIP SHALL BE INSTALLED FOR FIRE DEPARTMENT CONNECTIONS.
7) THE SIZING OF THE STANDPIPE IS BASED ON THE DEMAND OF THE HYDRAULICALLY MOST REMOTE STANDPIPE.
8) WORK SHALL BE COORDINATED WITH OTHER TRADES. NOTIFY DIRECTOR'S REPRESENTATIVE WHEN CONFLICTS ARISE.
9) ALL EQUIPMENT SHALL BE UL LISTED AND FM APPROVED FOR FIRE PROTECTION SYSTEMS.
10) PROVIDE 300 PSI PRESSURE GAUGE AT THE TOP OF EACH STANDPIPE.

PIPE HANGERS AND SUPPORTS

1. ACCEPTABLE PRODUCTS: ALL SUPPORT SYSTEMS ARE TO BE UL LISTED AND FM APPROVED AND INSTALLED IN ACCORDANCE WITH NFPA–13.
2. PROVIDE COMBINATION CLEVIS TYPE HANGERS UNLESS NOTED OTHERWISE.
3. PIPE HANGERS: HEIGHT ADJUSTABLE STANDARD DUTY CLEVIS TYPE, WITH CROSS BOLT AND NUT.
4. SWIVEL RING TYPE HANGERS WILL BE ALLOWED FOR SPRINKLER PIPING UP TO A MAXIMUM OF 2 INCHES IN SIZE.
5. HANGER RODS: MILD, LOW CARBON STEEL, FULLY THREADED OR THREADED AT EACH END, WITH TWO NUTS AT EACH END FOR POSITIONING ROD AND HANGER, AND LOCKING EACH IN PLACE.

5.1. PROVIDE HANGER ROD SIZED ACCORDING TO THE FOLLOWING SCHEDULE:

PIPE SIZE:	MINIMUM ROD DIAMETER:
6" OR 8"	½"

6. RISER CLAMPS: MALLEABLE IRON OR STEEL.
7. PIPE HANGERS OR OTHER SUPPORTS SHALL NOT BE ATTACHED TO DUCTWORK, CONDUITS, PIPES OR OTHER CONSTRUCTURAL ELEMENTS OF THE BUILDING.

GENERAL NOTES

1. ALL NEW VALVES ON THE FIRE PROTECTION SYSTEM SHALL BE LOCKED IN THE OPEN POSITION.
2. MATERIALS:

2.1. ALL PIPING 1"– 2" SHALL BE SCHEDULE 40 BLACK STEEL PIPING WITH THREADED CAST IRON FITTINGS. (SCHEDULE 10 PIPE WILL NOT BE ALLOWED).

2.2. ALL PIPING 2–1/2" OR LARGER SHALL BE SCHEDULE 10 BLACK STEEL PIPING WITH GROOVED TYPE FITTINGS AND MECHANICAL COUPLINGS.

3. ALL WORK SHALL BE IN STRICT CONFORMANCE WITH NFPA–14 "STANDARD FOR INSTALLATION OF STANDPIPE AND HOSE SYSTEMS", STATE BUILDING CODE, AND THE OWNER'S INSURANCE COMPANY.
4. THE BASE BUILDING "CONTRACT DRAWINGS" AND "SPECIFICATIONS" INCLUDING ALL RESPECTIVE ADDENDA AND BULLETINS SHALL FORM A PART OF THIS WORK AND ALL WORK SHALL BE SUBJECT TO RESPECTIVE PROVISIONS THEREOF.
5. REFER TO ARCHITECTURAL DRAWINGS FOR HUNG CEILING HEIGHTS AND CONSTRUCTION. WHERE WORK BETWEEN THIS DRAWING AND ARCHITECTURAL PLANS ARE IN CONFLICT, ADVISE PRIOR TO INSTALLATION OF PIPING.
6. WORK SHALL BE COORDINATED WITH ALL OTHER TRADES, NOTIFY ENGINEER TO AVOID CONFLICTS.
7. ALL EQUIPMENT SHALL BE APPROVED BY OWNER'S INSURANCE COMPANY.
8. LAYOUT OF STANDPIPES AND HYDRAULICS CALCULATIONS ARE FOR AUTHORITY HAVING JURISDICTION USE ONLY. SPRINKLER CONTRACTOR SHALL PREPARE FINAL STANDPIPE LAYOUT AND SHOP DRAWINGS INCLUDING HYDRAULIC CALCULATIONS AND OBTAIN ALL APPROVALS AS REQUIRED.
9. CONTRACTOR SHALL NOT INSTALL ANY PIPING THAT WILL INTERFERE WITH THE MAINTENANCE/REMOVAL OF HVAC EQUIPMENT.
10. CONTRACTOR SHALL DETERMINE BEST LOCATION FOR ROUTING/RE–ROUTING ALL ASSOCIATED STANDPIPE PIPING. PIPE ROUTING SHOWN SHALL BE USED AND ANY ADDITIONAL OFFSETS OR FITTINGS REQUIRED FOR PROPER INSTALLATION, COORDINATION WITH OTHER TRADES, AND/OR TO MAINTAIN PROPER CLEARANCES SHALL BE PROVIDED. VERIFY EXISTING STRUCTURAL, MECHANICAL, ELECTRICAL INSTALLATIONS AND AVOID ANY/ALL OBSTRUCTIONS OR INTERFERENCES WITH FIRE PROTECTION PIPE ROUTING.
11. CUTTING AND OR CORE DRILLING OF STRUCTURAL AND/OR ARCHITECTURAL MEMBERS TO BE DONE ONLY WITH THE WRITTEN APPROVAL OF THE ARCHITECT.
12. FIRE STOP ALL PENETRATIONS OF SMOKE/FIRE WALLS, CEILINGS, FLOORS, ROOFS, ETC. FLASH AND COUNTERFLASH ROOF PENETRATIONS.
13. PROVIDE ACCESS PANELS TO ALL VALVES ABOVE NON–ACCESSIBLE CEILINGS AND CHASES.
14. METHODS OF HANGING PIPES, HEADERS AND BRANCHES SHALL BE IN ACCORDANCE WITH NFPA–13.
15. ALL VALVES FOR FIRE SERVICE SHALL BE LISTED BY THE UNDERWRITER'S LABORATORIES, INC. AND THE FACTORY MUTUAL LABORATORIES. VALVES SHALL BE FACTORY MARKED "UL" AND "FM", 175 PSI WORKING PRESSURE.
16. ALL POWER WIRING SHALL BE ACCOMPLISHED UNDER THE ELECTRICAL DIVISION. ALL CONTROL AND INTERLOCK WIRING SHALL BE ACCOMPLISHED UNDER THIS SECTION OF THE SPECIFICATIONS IN ACCORDANCE WITH THE REQUIREMENTS IN THE ELECTRICAL DIVISION. COORDINATE ALL ELECTRICAL ITEMS WITH ELECTRICAL CONTRACTOR.
17. ALL FIRE PROTECTION SYSTEMS ARE SHOWN SCHEMATICALLY. IT IS NOT THE INTENT OF THESE PLANS TO SHOW ALL LISTED COMPONENTS, SUCH AS PIPING, FITTINGS, VALVES, ETC. CONTRACTOR IS RESPONSIBLE FOR INSTALLING SYSTEM PER APPLICABLE CODES.
18. PROVIDE A PERMANENTLY ATTACHED HYDRAULIC DESIGN INFORMATION SIGN STATING THE REQUIRED DESIGN CRITERIA FOR EACH HYDRAULICALLY DESIGNED SYSTEM.
19. THE STANDPIPE PIPING LAYOUT AND PIPE SIZES SHOWN ON THE CONTRACT DOCUMENTS ARE TO DEFINE THE DESIGN INTENT FOR COMPETITIVE BIDDING AND FOR PRELIMINARY SUBMISSION TO THE AUTHORITIES HAVING JURISDICTION. THE WORK OF THE CONTRACT INCLUDES HYDRAULIC CALCULATIONS AND FABRICATION SHOP DRAWINGS FOR THE ACTUAL INSTALLATION CONDITIONS.

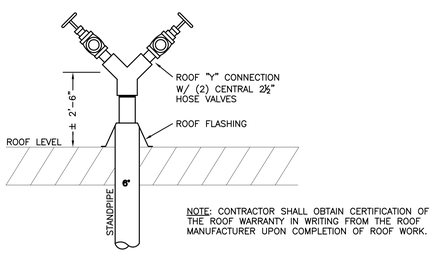

1 / FP001 **TYPICAL ROOFTOP STANDPIPE CONNECTION**
SCALE: NOT TO SCALE

DESMAN Design Management
edm
RAN FIRE PROTECTION ENGINEERING
1062 CENTRAL AVENUE, ALBANY, NY 12205
TEL: (518) 275-0791 FAX: (518) 275-0792
www.ranfpe.com

Olive Street Parking Facility

Olive Street
Greenfield, MA

CONSTRUCTION DOCUMENTS - BID SET

ISSUE

NO.	DESCRIPTION	DATE
5	CD - Bid Set	09/06/17
4	Permit Set	08/23/17
3	100% CD - MOD.1	08/01/17
2	100% CD	07/10/17
1	Addendum 1	06/02/17

Copyright © 2017 DESMAN, Inc. All rights reserved. No part of these documents may be reproduced in any form or by any means without written permission from DESMAN, Inc.

DRAWING TITLE:
FIRE PROTECTION NOTE, SYMBOLS AND DETAILS

DRAWING NO:
FP001

SCALE: AS NOTED
DATE: 09/06/2017
PROJECT NO: 20-16105.01-1

DES.	DRWN.	CHK'D.
CMC	CMC	DRN

KEYED NOTES:

1. INSTALL PIPING TIGHT TO UNDERSIDE OF CONCRETE BEAMS. PIPE AROUND CONCRETE BEAMS AS SHOWN. PROVIDE LOW POINT DRAINS AS NEEDED.
2. PROVIDE 8" CHECK VALVE WITH BALL DRIP ON DROP TO FDC. PROVIDE LOW POINT DRAINS TO ALLOW FOR COMPLETE DRAINAGE OF STANDPIPE SYSTEM.
3. 6" STANDPIPE RISER UP.
4. 6" STANDPIPE RISER UP AND DOWN.

GENERAL NOTES:

1. PITCH ALL PIPING BACK TO FIRE DEPARTMENT CONNECTION OR NEAREST LOW POINT DRAIN. PROVIDE LOW POINT DRAINS AS NEEDED. PIPING SHALL BE PITCHED IN ACCORDANCE WITH NFPA–14 AND NFPA–13 FOR DRY PIPE SYSTEMS.
2. IF CORE DRILLS ARE REQUIRED, SIZE CORE TO PROVIDE CLEARANCE TO PIPING IN ACCORDANCE WITH NFPA–14. COORDINATE WITH APPLICABLE TRADES. CORE DRILLING OF STRUCTURAL AND/OR ARCHITECTURAL MEMBERS TO BE DONE ONLY WITH THE WRITTEN APPROVAL OF THE ARCHITECT.

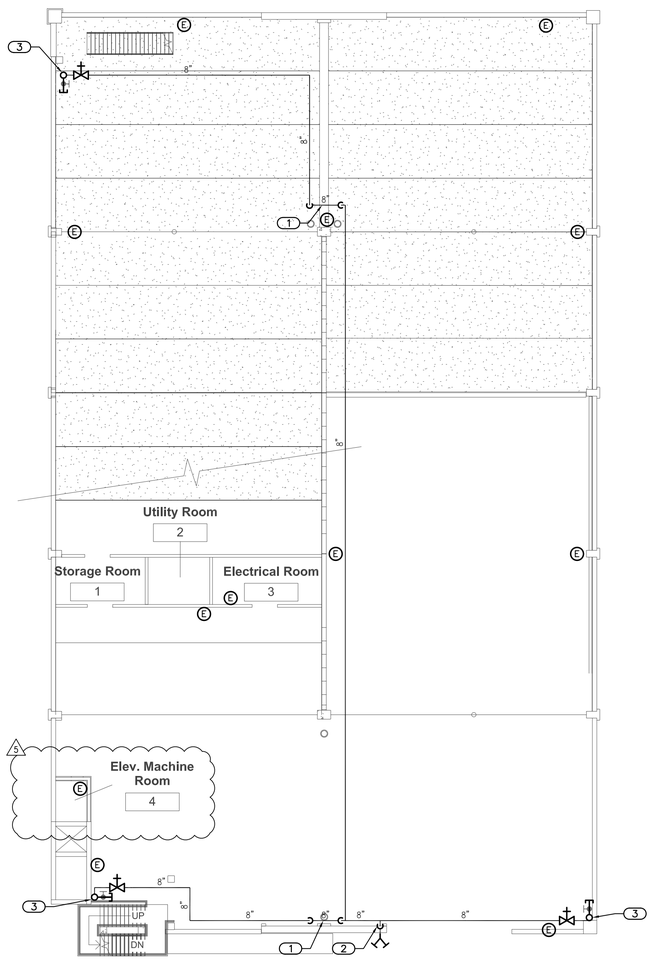

1 FP101 **GRADE FIRE PROTECTION PLAN**
SCALE: 1/16" = 1'–0"

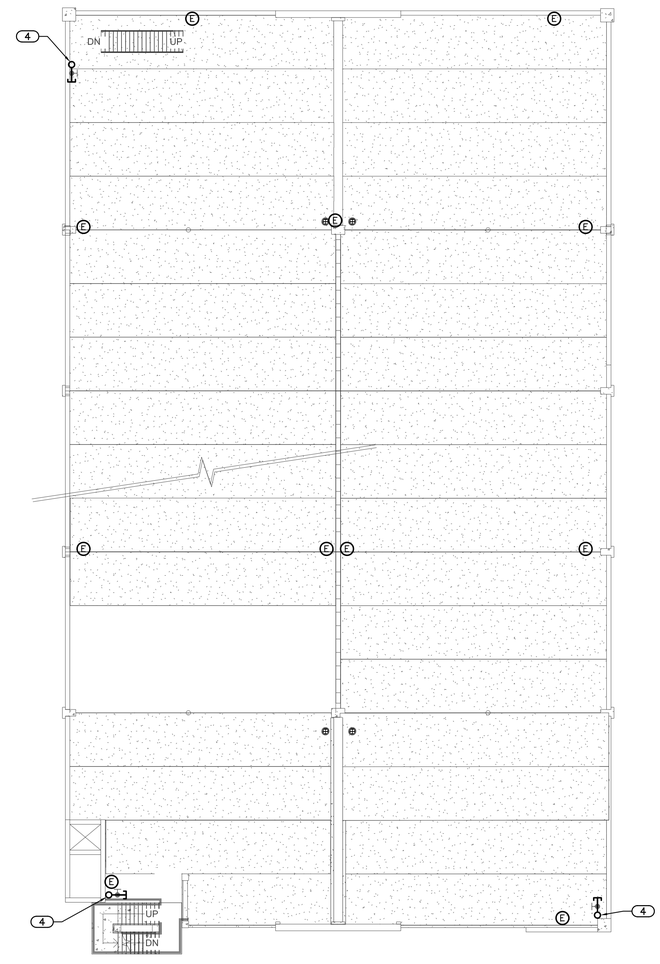

2 FP101 **SECOND FLOOR FIRE PROTECTION PLAN**
SCALE: 1/16" = 1'–0"

DESMAN Design Management

edm

RAZ FIRE PROTECTION ENGINEERING
1062 CENTRAL AVENUE, ALBANY, NY 12205
TEL: (518) 275-0791 FAX: (518) 275-0792
www.razfpe.com

Olive Street Parking Facility

Olive Street
Greenfield, MA

CONSTRUCTION DOCUMENTS - BID SET

ISSUE

NO.	DESCRIPTION	DATE
5	CD - Bid Set	09/06/17
4	Permit Set	08/23/17
3	100% CD - MOD.1	08/01/17
2	100% CD	07/10/17
1	Addendum 1	06/02/17

Copyright © 2017 DESMAN, Inc. All rights reserved. No part of these documents may be reproduced in any form or by any means without written permission from DESMAN, Inc.

DRAWING TITLE:
GRADE AND SECOND FLOOR FIRE PROTECTION PLANS

DRAWING NO:
FP101

SCALE: 1/16" = 1'-0"
DATE: 09/06/2017
PROJECT NO: 20-16105.01-1

DES.	DRWN.	CHK'D.
CMC	CMC	DRN

KEYED NOTES:

1. 6" STANDPIPE RISER UP AND DOWN.
2. 6" STANDPIPE RISER DOWN.
3. 6" STANDPIPE RISER UP.

GENERAL NOTES:

1. PITCH ALL PIPING BACK TO FIRE DEPARTMENT CONNECTION OR NEAREST LOW POINT DRAIN. PROVIDE LOW POINT DRAINS AS NEEDED. PIPING SHALL BE PITCHED IN ACCORDANCE WITH NFPA–14 AND NFPA–13 FOR DRY PIPE SYSTEMS.
2. IF CORE DRILLS ARE REQUIRED, SIZE CORE TO PROVIDE CLEARANCE TO PIPING IN ACCORDANCE WITH NFPA–14. COORDINATE WITH APPLICABLE TRADES. CORE DRILLING OF STRUCTURAL AND/OR ARCHITECTURAL MEMBERS TO BE DONE ONLY WITH THE WRITTEN APPROVAL OF THE ARCHITECT.

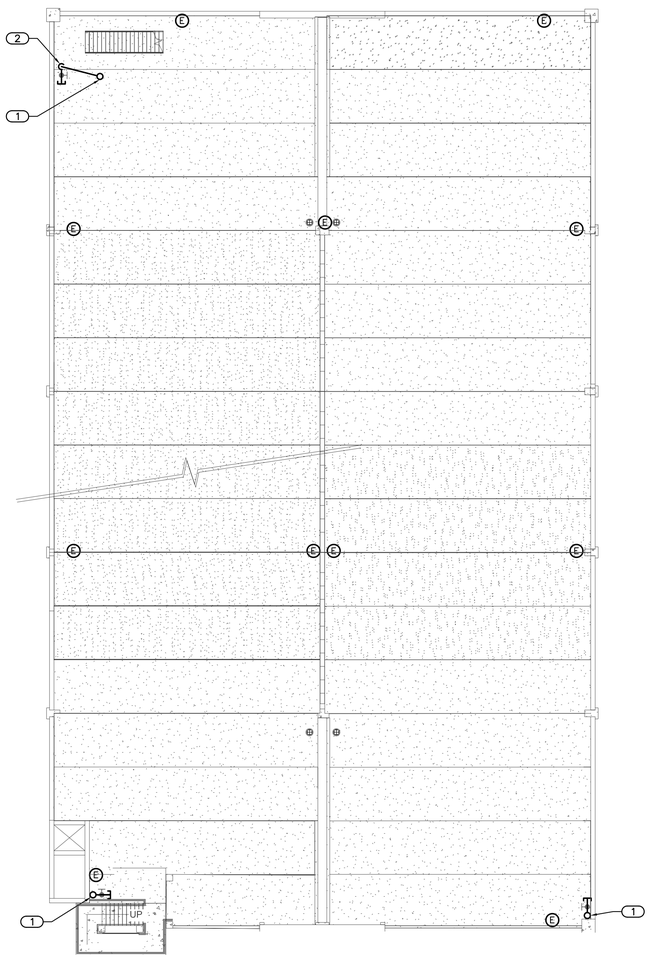

1 / FP102 **THIRD FLOOR FIRE PROTECTION PLAN**
SCALE: 1/16" = 1'–0"

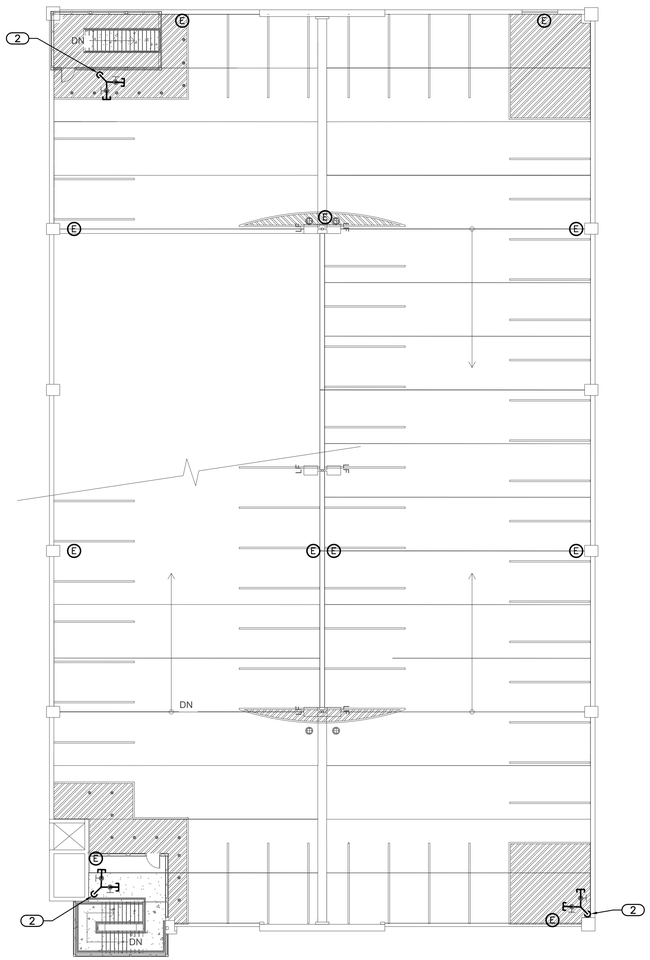

2 / FP102 **ROOF FIRE PROTECTION PLAN**
SCALE: 1/16" = 1'–0"

DESMAN Design Management
edm
RAZ FIRE PROTECTION ENGINEERING
1062 CENTRAL AVENUE, ALBANY, NY 12205
TEL: (518) 275-0791 FAX: (518) 275-0792
www.razfpe.com

Olive Street Parking Facility

Olive Street
Greenfield, MA

CONSTRUCTION DOCUMENTS - BID SET

ISSUE

NO.	DESCRIPTION	DATE
5	CD - Bid Set	09/06/17
4	Permit Set	08/23/17
3	100% CD - MOD.1	08/01/17
2	100% CD	07/10/17
1	Addendum 1	06/02/17

Copyright © 2017 DESMAN, Inc. All rights reserved. No part of these documents may be reproduced in any form or by any means without written permission from DESMAN, Inc.

DRAWING TITLE:
THIRD FLOOR AND ROOF FIRE PROTECTION PLANS

DRAWING NO:
FP102

SCALE: 1/16" = 1'-0"
DATE: 09/06/2017
PROJECT NO: 20-16105.01-1

DES.	DRWN.	CHK'D.
CMC	CMC	DRN

general plumbing legend:

- POINT OF DISCONNECT
- POINT OF NEW CONNECTION
- SHEET SPECIFIC DEMOLITION KEYED NOTES
- SHEET SPECIFIC NEW WORK KEYED NOTES
- TB/A — EQUIPMENT CALLOUT

mechanical abbreviations:

AFF	ABOVE FINISHED FLOOR
CO	CLEANOUT
DX	DIRECT EXPANSION
ECUH	ELECTRIC CABINET UNIT HEATER
EF	EXHAUST FAN
EFF	EFFICIENCY
ESP	EXTERNAL STATIC PRESSURE
MC	MECHANICAL CONTRACTOR
MECH	MECHANICAL
OA	OUTSIDE AIR
RA	RETURN AIR
SA	SUPPLY AIR
TR	TRANSFER
TYP	TYPICAL
UC	UNDERCUT DOOR
UH	UNIT HEATER
V	VOLTS
VD	VOLUME DAMPER
W	WIDTH
WC	WATER COLUMN

piping legend

label	symbols	description
CW		COLD WATER
ST		STORM DRAIN
V		SANITARY VENT
SAN	SAN — SAN	SANITARY WASTE
BFP		BACKFLOW PREVENTER
		REDUCER
		PIPE BREAK
		DIRECTION OF FLOW
	LWCO	LOW WATER CUT OUT
FD		FLOOR DRAIN
FCO		FLOOR CLEAN OUT
		PIPE UP/RISE
		PIPE DN/DROP
	H	HEAT DETECTOR
	T	TEMPERATURE SENSOR

general electrical notes:

1. ALL WIRING SHALL COMPLY WITH THE LATEST EDITION OF THE NATIONAL ELECTRICAL CODE (NFPA 70).
2. THE CONTRACTOR SHALL IDENTIFY POWER SOURCES IN THE FIELD.
3. INSTALL AND CONNECT ELECTRICAL CONTROL DEVICES FURNISHED BY THE MANUFACTURER, UNLESS SPECIFIED TO BE FACTORY MOUNTED.
4. THE CONTRACTOR SHALL VERIFY THE EXACT LOCATION AND ELECTRICAL REQUIREMENTS OF ALL EQUIPMENT PRIOR TO INSTALLATION AND COORDINATE REQUIREMENTS WITH ELECTRICAL TRADE.

general mechanical notes:

1. WORK, MATERIALS, AND EQUIPMENT SHALL COMPLY WITH THE MOST RESTRICTIVE OF LOCAL, STATE, AND FEDERAL AUTHORITIES' CODES AND ORDINANCES OR THESE PLANS AND SPECIFICATIONS. AS A MINIMUM, THE INSTALLATION SHALL COMPLY WITH THE CURRENT EDITIONS IN EFFECT 30 DAYS PRIOR TO THE RECEIPT OF BIDS .THE CONTRACTOR SHALL BE RESPONSIBLE FOR ALL NECESSARY PERMITS AND BE RESPONSIBLE FOR PAYMENT OF SAME ON ALL WORK WITHIN THIS CONTRACT. CONTRACTOR SHALL BE RESPONSIBLE TO MAKE CHANGES AS REQUESTED BY THE AHJ.
2. CONTRACT DOCUMENT DRAWINGS FOR MECHANICAL WORK (HVAC, PLUMBING AND FIRE PROTECTION) ARE DIAGRAMMATIC AND ARE INTENDED TO CONVEY SCOPE AND GENERAL ARRANGEMENT ONLY.
3. ALL FIELD CONDITIONS SHALL BE VERIFIED PRIOR TO BIDDING, PROPOSING, OR BEGINNING ANY WORK. CHANGES RESULTING FROM CONDITIONS ARISING IN THE FIELD ARE TO BE MADE AT NO ADDITIONAL COST TO THE OWNER.COORDINATE ALL WORK OR ADJUST SAME TO THAT OF OTHER TRADES AND TO COMPENSATE FOR EXISTING CONDITIONS IN ORDER THAT CONFLICTS IN SPACE LOCATIONS DO NOT OCCUR. CONTRACTOR SHALL COORDINATE AND MAKE ACCOMMODATIONS FOR CONFLICTS AT NO COST TO THE OWNER.
4. THE CONTRACTOR SHALL PROVIDE SHOP DRAWINGS AND/OR OTHER SUBMITTALS ON EQUIPMENT, COMPONENTS, AND CONTROLS TO BE INSTALLED OR PROVIDED. NO WORK MAY BEGIN ON ANY SEGMENT OF THIS PROJECT UNTIL SUBMITTALS HAVE BEEN APPROVED FOR CONFORMITY WITH DESIGN INTENT. WHEN MANUFACTURER'S CUT SHEETS APPLY TO A PRODUCT SERIES RATHER THAN A SPECIFIC PRODUCT, THE DATA SPECIFICALLY APPLICABLE TO THE PROJECT SHALL BE HIGHLIGHTED OR CLEARLY INDICATED BY OTHER MEANS. EACH SUBMITTED PIECE OF LITERATURE AND DRAWING SHALL CLEARLY REFERENCE THE SPECIFICATION AND/OR DRAWING THAT THE SUBMITTAL IS TO COVER. GENERAL CATALOGS SHALL NOT BE ACCEPTED AS CUT SHEETS TO FULFILL SUBMITTAL REQUIREMENTS. SELECT AND SHOW SUBMITTAL QUANTITIES APPROPRIATE TO SCOPE OF WORK. SUBMITTAL APPROVAL DOES NOT RELIEVE CONTRACTOR OF RESPONSIBILITY TO SUPPLY SUFFICIENT QUANTITIES TO COMPLETE WORK.
5. IT IS THE INTENT OF THE CONTRACT DRAWINGS AND SPECIFICATIONS TO CALL FOR FINISHED WORK, TESTED AND READY FOR OPERATION. ALL MATERIALS SHALL BE OF FIRST QUALITY AND SIMILAR TO EXISTING WHERE INTERFACING.
6. PROVIDE ALL MATERIALS AND EQUIPMENT AND PERFORM ALL LABOR REQUIRED TO INSTALL COMPLETE AND OPERABLE MECHANICAL SYSTEMS AS INDICATED ON THE DRAWINGS, AS SPECIFIED AND AS REQUIRED BY CODE. ALL MATERIAL, WORK, INCIDENTAL ACCESSORIES, OR OTHER DETAILS NOT SHOWN BUT NECESSARY TO MAKE THE WORK COMPLETE AND PERFECT, AND IN ALL RESPECTS READY FOR OPERATION, EVEN IF NOT SPECIFIED, ARE TO BE PROVIDED AT NO COST TO THE OWNER.
7. ALL WORK SHALL BE PERFORMED BY QUALIFIED TRADESMEN IN ACCORDANCE WITH REQUIREMENTS OF GOVERNING CODES AND ACCEPTED PRACTICES.
8. INSTALL ALL MECHANICAL EQUIPMENT AND APPURTENANCES IN ACCORDANCE WITH MANUFACTURER'S RECOMMENDATIONS, CONTRACT DOCUMENTS, AND APPLICABLE CODES AND REGULATIONS.
9. UPON COMPLETION OF THE WORK UNDER THIS CONTRACT, THE CONTRACTOR SHALL REMOVE ALL TOOLS, APPLIANCES, SURPLUS MATERIALS, AND SCRAP LEAVING HIS WORK IN A PERFECT CONDITION AND THE AREA CLEAN AND READY FOR OCCUPATION.
10. PROVIDE VIBRATION ISOLATION FOR ALL MECHANICAL EQUIPMENT TO PREVENT TRANSMISSION OF VIBRATION TO BUILDING STRUCTURE.
11. COORDINATE CONSTRUCTION OF ALL MECHANICAL WORK WITH ARCHITECTURAL, STRUCTURAL. CIVIL, ELECTRICAL WORK, ETC., SHOWN ON OTHER CONTRACT DOCUMENT DRAWINGS.
12. LOCATE ALL TEMPERATURE, PRESSURE, AND FLOW MEASURING DEVICES IN ACCESSIBLE LOCATIONS WITH STRAIGHT SECTIONS OF PIPE OR DUCT UP– AND DOWN STREAM AS RECOMMENDED BY THE MANUFACTURER FOR GOOD ACCURACY.
13. WHERE TWO OR MORE ITEMS OF THE SAME TYPE OF EQUIPMENT ARE REQUIRED, THE PRODUCT OF ONE MANUFACTURER SHALL BE USED.
14. COORDINATE ALL EQUIPMENT CONNECTIONS WITH MANUFACTURER'S CERTIFIED DRAWINGS.
15. COORDINATE AND PROVIDE ALL DUCTWORK AND PIPING TRANSITIONS REQUIRED FOR FINAL EQUIPMENT CONNECTIONS TO FURNISHED EQUIPMENT. FIELD VERIFY AND COORDINATE ALL DUCT AND PIPING DIMENSIONS BEFORE FABRICATION.
16. THE LOCATIONS OF ALL ITEMS SHOWN ON THE DRAWINGS OR CALLED FOR IN THE SPECIFICATIONS THAT ARE NOT DEFINITELY FIXED BY DIMENSIONS ARE APPROXIMATE ONLY. THE EXACT LOCATIONS NECESSARY TO SECURE THE BEST CONDITIONS AND RESULTS MUST BE DETERMINED BY THE PROJECT SITE CONDITIONS AND SHALL HAVE THE APPROVAL OF THE ENGINEER BEFORE BEING INSTALLED. DO NOT SCALE DRAWINGS.
17. ALL EQUIPMENT, PIPING, DUCTWORK, ETC., SHALL BE SUPPORTED AS DETAILED, SPECIFIED, AND REQUIRED TO PROVIDE A VIBRATION FREE INSTALLATION.
18. CONTRACTOR SHALL BE RESPONSIBLE FOR DAILY CLEANUP AND THE PROPER LEGAL DISPOSAL OF ALL DEMOLISHED EQUIPMENT AND DEBRIS CREATED BY THEIR WORK.
19. CONTRACTOR SHALL BE RESPONSIBLE TO COORDINATE ALL REQUIRED PENETRATIONS IN WALLS, CEILINGS, FLOORS, AND ROOF WITH GENERAL CONTRACTOR. ALL PENETRATIONS SHALL BE FIRE STOPPED AS REQUIRED BY CODE.
20. ALL DUCTWORK DIMENSIONS, AS SHOWN ON DRAWINGS, ARE INTERNAL CLEAR DIMENSIONS AND DUCT SIZE SHALL BE INCREASED TO COMPENSATE FOR DUCT LINING THICKNESS.
21. WHEN MECHANICAL WORK (HVAC, PLUMBING, SHEET METAL, FIRE PROTECTION, ETC.) IS SUBCONTRACTED, IT SHALL BE THE MECHANICAL CONTRACTOR'S RESPONSIBILITY TO COORDINATE SUBCONTRACTORS AND THE ASSOCIATED CONTRACTS. WHEN DISCREPANCIES ARISE PERTAINING TO WHICH CONTRACTOR PROVIDES A PARTICULAR ITEM OF THE MECHANICAL CONTRACT OR CONTRACTOR PROVIDES FINAL CONNECTIONS FOR A PARTICULAR ITEM OF THE MECHANICAL CONTRACT, IT SHALL BE BROUGHT TO THE ATTENTION OF THE MECHANICAL CONTRACTOR, WHOSE DECISION SHALL BE FINAL.
22. MAKE ALL REQUIRED ADJUSTMENTS TO EQUIPMENT, AIR DEVICES, AND WATER FLOWS UNTIL ALL SPECIFIED PERFORMANCES ARE MET TO WITHIN +/–5% ALL AIR AND WATER SYSTEMS SHALL BE BALANCED ACCORDING TO THE PLANS. TESTING, ADJUSTING, AND BALANCING AGENCY SHALL BE A MEMBER OF THE ASSOCIATED AIR BALANCE COUNCIL (AABC) OR THE NATIONAL ENVIRONMENTAL BALANCING BUREAU (NEBB). TESTING, ADJUSTING, AND BALANCING SHALL BE PERFORMED IN ACCORDANCE WITH AABC STANDARDS. BALANCE REPORT(S) SHALL BE PROVIDED TO THE ENGINEER FOR APPROVAL.
23. ALL CONTROL WIRE AND CONDUIT SHALL COMPLY WITH NATIONAL ELECTRIC CODE AND APPLICABLE SPECIFICATION SECTIONS.
24. ALL MISCELLANEOUS STEEL REQUIRED TO ENSURE PROPER INSTALLATION AND AS SHOWN IN DETAILS FOR PIPING, DUCTWORK, AND EQUIPMENT (UNLESS OTHERWISE NOTED) SHALL BE FURNISHED AND INSTALLED BY THE MECHANICAL CONTRACTOR.
25. ALL OPENINGS IN FIRE WALLS DUE TO DUCTWORK, PIPING, CONDUIT, ETC., SHALL BE FIRE STOPPED AS REQUIRED BY CODE.
26. LOCATIONS AND SIZES OF ALL FLOOR, WALL, AND ROOF OPENINGS SHALL BE COORDINATED WITH ALL OTHER TRADES INVOLVED.
27. ALL DUCTWORK, PIPING AND EQUIPMENT SUPPORTED FROM STRUCTURE SHALL BE COORDINATED WITH GENERAL CONTRACTOR. ALL ATTACHMENTS TO STEEL BAR JOISTS, TRUSSES, OR JOIST GIRDERS SHALL BE AT PANEL POINTS. PROVIDE BEAM CLAMPS MEETING MSS STANDARDS. WELDING TO STRUCTURAL MEMBERS SHALL NOT BE PERMITTED. THE USE OF C–CLAMPS SHALL NOT BE PERMITTED.
28. MECHANICAL EQUIPMENT SHALL NOT BE SUPPORTED FROM METAL DECK.
29. ALL TESTS SHALL BE COMPLETED BEFORE ANY MECHANICAL EQUIPMENT OR PIPE INSULATION IS APPLIED.
30. INSTALL ALL PIPE WITHOUT FORCING OR SPRINGING.
31. ALL PIPING SHALL CLEAR DOORS AND WINDOWS.
32. ALL PIPING AND DUCT WORK SHALL BE COORDINATED WITH ALL TRADES INVOLVED. OFFSETS IN PIPING AROUND OBSTRUCTIONS SHALL BE PROVIDED AT NO ADDITIONAL COST TO THE OWNER.
33. DURING CONSTRUCTION, OPEN DUCTWORK COMMUNICATING WITH OCCUPIED AREAS SHALL BE TEMPORARILY SEALED TO PREVENT DUST AND DEBRIS FROM TRAVELING INTO THE OCCUPIED AREAS OR BECOMING TRAPPED IN THE DUCTWORK.
34. COORDINATE DIFFUSER, REGISTER, AND GRILL LOCATIONS WITH ARCHITECTURAL REFLECTED CEILING PLANS, LIGHTING, AND OTHER CEILING ITEMS AND MAKE MINOR DUCT MODIFICATIONS TO SUIT.
35. COORDINATE DUCTWORK WITH STRUCTURAL MEMBERS AND OTHER INSTALLED EQUIPMENT ABOVE CEILINGS. ADJUST DUCTWORK AS NECESSARY TO ACCOMMODATE OBSTRUCTIONS AND CLEARANCES. COORDINATE ADJUSTMENTS ON RECORD DRAWINGS (AS–BUILTS).
36. FURNISH REPRODUCIBLE RECORD DRAWINGS UPON WHICH CORRECTIONS HAVE BEEN INCLUDED TO PROVIDE AN ACCURATE AND COMPLETE RECORD OF THE WORK AS INSTALLED. ALL DUCTWORK, EQUIPMENT, PIPING, AND ADJUSTABLE DEVICES SHALL BE INCLUDED AND DIMENSIONED ON THE RECORD DRAWINGS.
37. ALL WORK IS TO BE FREE OF DEFECTS IN WORKMANSHIP AND MATERIALS FOR A PERIOD OF NO LESS THAN ONE YEAR, UNLESS OTHERWISE INDICATED, FROM THE DATE OF FINAL ACCEPTANCE. ALL DEFECTS WHICH DEVELOP OR ARE DISCOVERED WITHIN THIS PERIOD WILL BE REPAIRED BY THE CONTRACTOR, TO THE SATISFACTION OF THE OWNER, AND AT NO ADDITIONAL COST TO THE OWNER.

DAMPER SCHEDULE

UNIT NO.	SERVICE	LOCATION	WIDTH	HEIGHT	MANUFACTURER MODEL NUMBER (AS STANDARD)	REMARKS
MD–1	EXHAUST	AS SHOWN	42 INCH	24 INCH	RUSKIN FSD60–3	SEE NOTES 1

NOTES:
1. PROVIDE DAMPER WITH 120 VOLT ACTUATOR

LOUVER SCHEDULE

UNIT NO.	SERVICE	LOCATION	WIDTH	HEIGHT	FREE AREA	MANUFACTURER MODEL NUMBER (AS STANDARD)	REMARKS
LV–1	EXHAUST	AS SHOWN	42 INCH	24 INCH	3 SQUARE FEET	RUSKIN ELF375DX	SEE NOTES 1,2

NOTES:
1. PROVIDE LOUVER WITH OPTION BIRD SCREEN.
2. COORDINATE WITH ARCHITECT FOR REQUIRED COLOR.

ELECTRIC UNIT HEATER SCHEDULE

UNIT NO.	MANUFACTURER	MODEL NO.	LOCATION	ELECTRICAL					COMMENTS
				VOLTS	PH	HEATER AMPS	MIN CKT AMPS	WATTS	
UH–1	QMARK	MWUH5004	AS SHOWN	208	1	9.00	11.30	1874	PROVIDE UNIT WITH BUILT–IN THERMOSTAT, DISCONNECT SWITCH (MODEL DS30), & MOUNTING BRACKET KIT
UH–2	QMARK	MWUH7504	AS SHOWN	208	1	18.00	22.50	3750	PROVIDE UNIT WITH BUILT–IN THERMOSTAT, DISCONNECT SWITCH (MODEL DS30), & MOUNTING BRACKET KIT

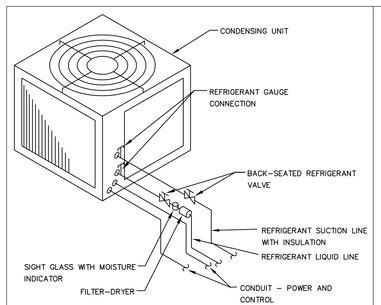

AIR–COOLED CONDENSING UNIT

N.T.S.

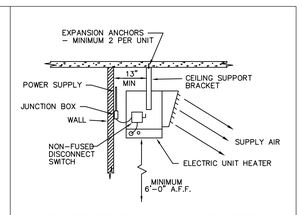

ELECTRIC UNIT HEATER MOUNTING DETAIL

NOT TO SCALE

COOLING UNIT SCHEDULE

DESIGNATION	INDOOR UNIT				OUTDOOR UNIT			REFRIGERANT				ELECTRICAL		BASIS OF DESIGN		REMARKS
	TYPE	AIRFLOW CFM	FAN MOTOR FLA	CAPACITY (BTU)	TYPE	AIRFLOW (CFM)	FAN MOTOR FLA	TYPE	MAX. PIPE LENGTH	GAS SIDE PIPE	LIQUID SIDE PIPE	VOLTS – PH	MCA	MAKE	MODEL (INDOOR UNIT/OUTDOOR UNIT)	
AC–1	WALL–MOUNTED	230	0.2	12,000	COOLING	945	0.3	R–410A	82 FT	1/2 IN.	1/4 IN.	208 – 1	10.0	CARRIER	40MFC012–––3/38MFC012–––3	PROVIDE WITH LOW AMBIENT FREEZE PROTECTION KIT

DESMAN Design Management

edm
architecture • engineering • management
pittsfield, ma
uniondale, ct
chicopee, ma
albany, ny
(888) 336-6500
team@edm-ae.com

Olive Street Parking Facility

Olive Street
Greenfield, MA

CONSTRUCTION DOCUMENTS - BID SET

ISSUE

NO.	DESCRIPTION	DATE
5	CD - Bid Set	09/06/17
2	100% CD	07/10/17

Copyright © 2017 DESMAN, Inc. All rights reserved. No part of these documents may be reproduced in any form or by any means without written permission from DESMAN, Inc.

DRAWING TITLE:
MECHANICAL LEGENDS, SCHEDULES AND DETAILS

DRAWING NO:
H001

SCALE: NONE
DATE: 09/06/2017
PROJECT NO: 20-16105.01-1

DES.	DRWN.	CHK'D.
FJB	FJB	BDJ

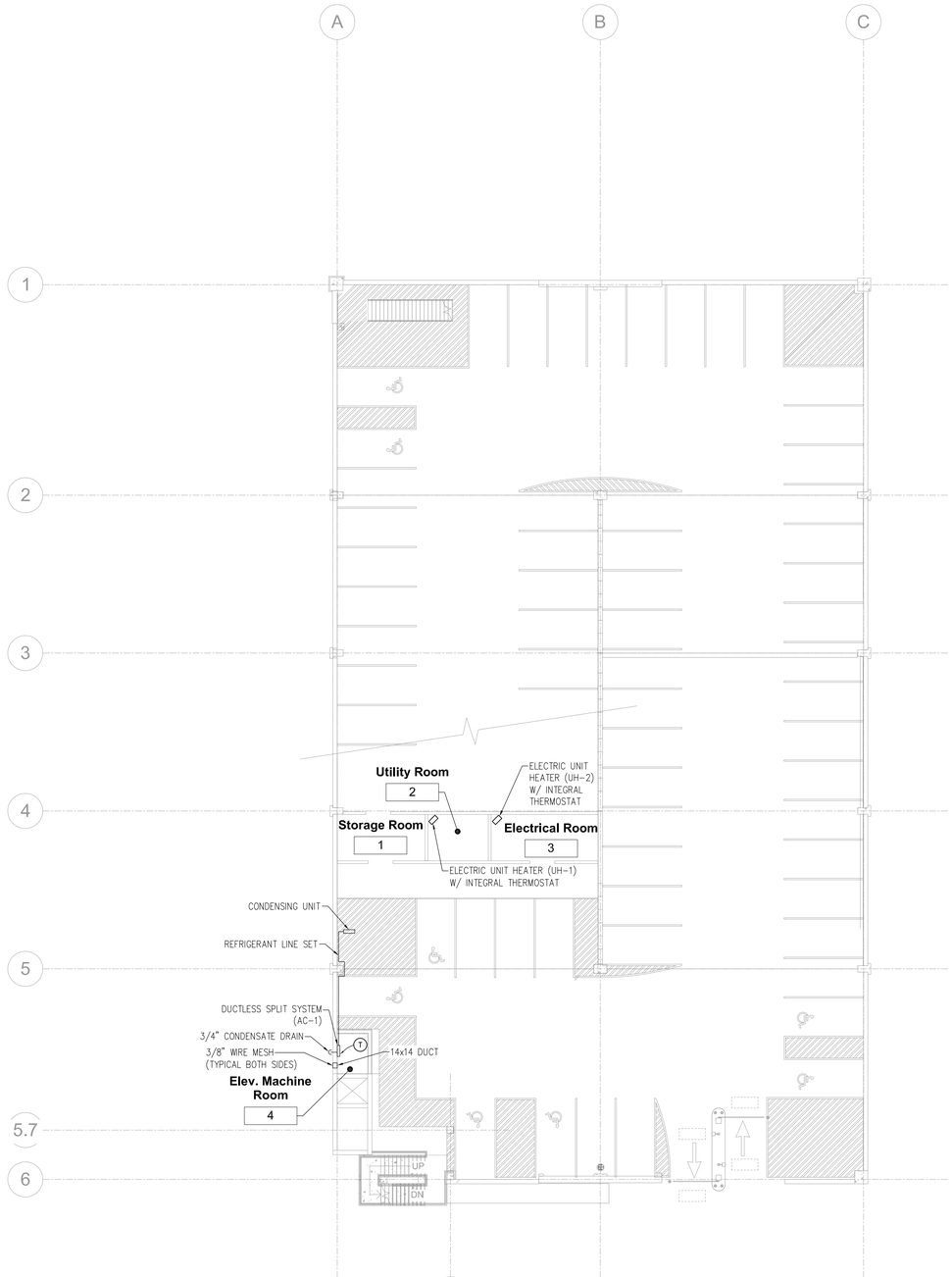

A.4

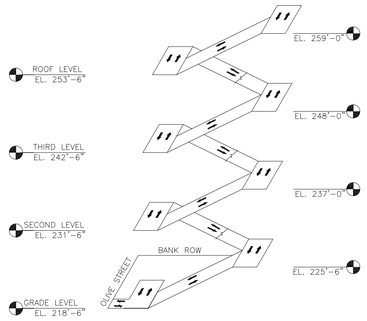

GENERAL NOTES:

1. CONDENSING UNIT TO BE MOUNTED IN GARAGE CEILING AREA BETWEEN DOUBLE TEE STEMS. CONDENSING UNIT TO BE SUPPORTED FROM GARAGE CEILING. CONTRACTOR TO PROVIDE/INSTALL SUPPORTS FOR CONDENSING UNIT.

2. MECHANICAL CONTRACTOR RESPONSIBLE FOR ANY CORE DRILLING REQUIRED FOR MECHANICAL EQUIPMENT INSTALLATION.

DESMAN
Design Management

edm
architecture
•
engineering
•
management

pittsfield, ma
unionville, ct
chicopee, ma
albany, ny
(888) 336-6500
team@edm-ae.com

Olive Street Parking Facility

Olive Street
Greenfield, MA

CONSTRUCTION DOCUMENTS - BID SET

ISSUE

NO.	DESCRIPTION	DATE
5	CD - Bid Set	09/06/17
2	100% CD	07/10/17

Copyright © 2017 DESMAN, Inc. All rights reserved. No part of these documents may be reproduced in any form or by any means without written permission from DESMAN, Inc.

DRAWING TITLE:
MECHANICAL GRADE LEVEL PLAN

DRAWING NO:
H100

SCALE: 1/16" = 1'-0"
DATE: 09/06/2017
PROJECT NO: 20-16105.01-1

DES.	DRWN.	CHK'D.
FJB	FJB	BDJ

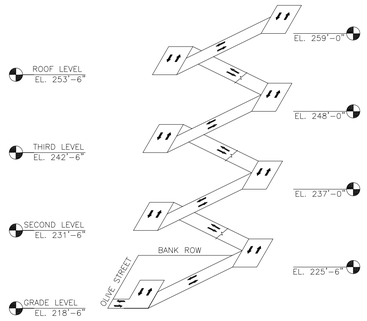

venting of hoistway control sequence:

MOTORIZED DAMPER TO OPEN UNDER EACH ONE OF THE FOLLOWING:
A. BY AN APPROVED AUTOMATIC THERMOSTAT DESIGNED TO OPEN AT A TEMPERATURE OF NOT MORE THAN 90 DEGREE F
B. BY BUILDING FIRE ALARM SYSTEM
C. IN THE EVENT OF A POWER FAILURE

DESMAN
Design Management

edm
architecture
•
engineering
•
management

pittsfield, ma
unionville, ct
chicopee, ma
albany, ny
(888) 336-6500
team@edm-ae.com

Olive Street Parking Facility

Olive Street
Greenfield, MA

CONSTRUCTION DOCUMENTS - BID SET

ISSUE

NO.	DESCRIPTION	DATE
5	CD - Bid Set	09/06/17
2	100% CD	07/10/17

Copyright © 2017 DESMAN, Inc. All rights reserved. No part of these documents may be reproduced in any form or by any means without written permission from DESMAN, Inc.

DRAWING TITLE:
MECHANICAL ROOF LEVEL PLAN

DRAWING NO:
H101

SCALE: 1/16" = 1'-0"
DATE: 09/06/2017
PROJECT NO: 20-16105.01-1

DES.	DRWN.	CHK'D.
FJB	FJB	BDJ

general plumbing legend:

- POINT OF DISCONNECT
- POINT OF NEW CONNECTION
- SHEET SPECIFIC DEMOLITION KEYED NOTES
- SHEET SPECIFIC NEW WORK KEYED NOTES
- TB/A — EQUIPMENT CALLOUT

mechanical abbreviations:

AFF	ABOVE FINISHED FLOOR
CO	CLEANOUT
DX	DIRECT EXPANSION
ECUH	ELECTRIC CABINET UNIT HEATER
EF	EXHAUST FAN
EFF	EFFICIENCY
ESP	EXTERNAL STATIC PRESSURE
MC	MECHANICAL CONTRACTOR
MECH	MECHANICAL
OA	OUTSIDE AIR
RA	RETURN AIR
SA	SUPPLY AIR
TR	TRANSFER
TYP	TYPICAL
UC	UNDERCUT DOOR
UH	UNIT HEATER
V	VOLTS
VD	VOLUME DAMPER
W	WIDTH
WC	WATER COLUMN

piping legend

label	symbols	description
CW		COLD WATER
ST		STORM DRAIN
V		SANITARY VENT
SAN	SAN — SAN	SANITARY WASTE
BFP		BACKFLOW PREVENTER
		REDUCER
		PIPE BREAK
		DIRECTION OF FLOW
	LWCO	LOW WATER CUT OUT
FD		FLOOR DRAIN
FCO		FLOOR CLEAN OUT
		PIPE UP/RISE
		PIPE DN/DROP
	H	HEAT DETECTOR
	T	TEMPERATURE SENSOR

general electrical notes:

1. ALL WIRING SHALL COMPLY WITH THE LATEST EDITION OF THE NATIONAL ELECTRICAL CODE (NFPA 70).
2. THE CONTRACTOR SHALL IDENTIFY POWER SOURCES IN THE FIELD.
3. INSTALL AND CONNECT ELECTRICAL CONTROL DEVICES FURNISHED BY THE MANUFACTURER, UNLESS SPECIFIED TO BE FACTORY MOUNTED.
4. THE CONTRACTOR SHALL VERIFY THE EXACT LOCATION AND ELECTRICAL REQUIREMENTS OF ALL EQUIPMENT PRIOR TO INSTALLATION AND COORDINATE REQUIREMENTS WITH ELECTRICAL TRADE.

general plumbing notes:

1. WORK, MATERIALS, AND EQUIPMENT SHALL COMPLY WITH THE MOST RESTRICTIVE OF LOCAL, STATE, AND FEDERAL AUTHORITIES' CODES AND ORDINANCES OR THESE PLANS AND SPECIFICATIONS. AS A MINIMUM, THE INSTALLATION SHALL COMPLY WITH THE CURRENT EDITIONS IN EFFECT 30 DAYS PRIOR TO THE RECEIPT OF BIDS .THE CONTRACTOR SHALL BE RESPONSIBLE FOR ALL NECESSARY PERMITS AND BE RESPONSIBLE FOR PAYMENT OF SAME ON ALL WORK WITHIN THIS CONTRACT. CONTRACTOR SHALL BE RESPONSIBLE TO MAKE CHANGES AS REQUESTED BY THE AHJ.
2. CONTRACT DOCUMENT DRAWINGS FOR MECHANICAL WORK (HVAC, PLUMBING AND FIRE PROTECTION) ARE DIAGRAMMATIC AND ARE INTENDED TO CONVEY SCOPE AND GENERAL ARRANGEMENT ONLY.
3. ALL FIELD CONDITIONS SHALL BE VERIFIED PRIOR TO BIDDING, PROPOSING, OR BEGINNING ANY WORK. CHANGES RESULTING FROM CONDITIONS ARISING IN THE FIELD ARE TO BE MADE AT NO ADDITIONAL COST TO THE OWNER. COORDINATE ALL WORK OR ADJUST SAME TO THAT OF OTHER TRADES AND TO COMPENSATE FOR EXISTING CONDITIONS IN ORDER THAT CONFLICTS IN SPACE LOCATIONS DO NOT OCCUR. CONTRACTOR SHALL COORDINATE AND MAKE ACCOMMODATIONS FOR CONFLICTS AT NO COST TO THE OWNER.
4. THE CONTRACTOR SHALL PROVIDE SHOP DRAWINGS AND/OR OTHER SUBMITTALS ON EQUIPMENT, COMPONENTS, AND CONTROLS TO BE INSTALLED OR PROVIDED. NO WORK MAY BEGIN ON ANY SEGMENT OF THIS PROJECT UNTIL SUBMITTALS HAVE BEEN APPROVED FOR CONFORMITY WITH DESIGN INTENT. WHEN MANUFACTURER'S CUTSHEETS APPLY TO A PRODUCT SERIES RATHER THAN A SPECIFIC PRODUCT, THE DATA SPECIFICALLY APPLICABLE TO THE PROJECT SHALL BE HIGHLIGHTED OR CLEARLY INDICATED BY OTHER MEANS. EACH SUBMITTED PIECE OF LITERATURE AND DRAWING SHALL CLEARLY REFERENCE THE SPECIFICATION AND/OR DRAWING THAT THE SUBMITTAL IS TO COVER. GENERAL CATALOGS SHALL NOT BE ACCEPTED AS CUTSHEETS TO FULFILL SUBMITTAL REQUIREMENTS. SELECT AND SHOW SUBMITTAL QUANTITIES APPROPRIATE TO SCOPE OF WORK. SUBMITTAL APPROVAL DOES NOT RELIEVE CONTRACTOR OF RESPONSIBILITY TO SUPPLY SUFFICIENT QUANTITIES TO COMPLETE WORK.
5. IT IS THE INTENT OF THE CONTRACT DRAWINGS AND SPECIFICATIONS TO CALL FOR FINISHED WORK, TESTED AND READY FOR OPERATION. ALL MATERIALS SHALL BE OF FIRST QUALITY AND SIMILAR TO EXISTING WHERE INTERFACING.
6. PROVIDE ALL MATERIALS AND EQUIPMENT AND PERFORM ALL LABOR REQUIRED TO INSTALL COMPLETE AND OPERABLE PLUMBING SYSTEMS AS INDICATED ON THE DRAWINGS, AS SPECIFIED AND AS REQUIRED BY CODE. ALL MATERIAL, WORK, INCIDENTAL ACCESSORIES, OR OTHER DETAILS NOT SHOWN BUT NECESSARY TO MAKE THE WORK COMPLETE AND PERFECT, AND IN ALL RESPECTS READY FOR OPERATION, EVEN IF NOT SPECIFIED, ARE TO BE PROVIDED AT NO COST TO THE OWNER.
7. ALL WORK SHALL BE PERFORMED BY QUALIFIED TRADES-MEN IN ACCORDANCE WITH REQUIREMENTS OF GOVERNING CODES AND ACCEPTED PRACTICES.
8. INSTALL ALL PLUMBING EQUIPMENT AND APPURTENANCES IN ACCORDANCE WITH MANUFACTURERS' RECOMMENDATIONS, CONTRACT DOCUMENTS, AND APPLICABLE CODES AND REGULATIONS.
16. CONTRACTOR SHALL BE RESPONSIBLE FOR DAILY CLEANUP AND THE PROPER LEGAL DISPOSAL OF ALL DEMOLISHED EQUIPMENT AND DEBRIS CREATED BY THEIR WORK.
17. UPON COMPLETION OF THE WORK UNDER THIS CONTRACT, THE CONTRACTOR SHALL REMOVE ALL TOOLS, APPLIANCES, SURPLUS MATERIALS, AND SCRAP LEAVING HIS WORK IN A PERFECT CONDITION AND THE AREA CLEAN AND READY FOR OCCUPATION.
18. COORDINATE CONSTRUCTION OF ALL PLUMBING WORK WITH ARCHITECTURAL, STRUCTURAL. CIVIL, ELECTRICAL WORK, ETC., SHOWN ON OTHER CONTRACT DOCUMENT DRAWINGS.
19. WHERE TWO OR MORE ITEMS OF THE SAME TYPE OF EQUIPMENT ARE REQUIRED, THE PRODUCT OF ONE MANUFACTURER SHALL BE USED.
20. COORDINATE ALL EQUIPMENT CONNECTIONS WITH MANUFACTURERS' CERTIFIED DRAWINGS.
21. COORDINATE AND PROVIDE ALL PIPING TRANSITIONS REQUIRED FOR FINAL EQUIPMENT CONNECTIONS TO FURNISHED EQUIPMENT. FIELD VERIFY AND COORDINATE ALL PIPING DIMENSIONS BEFORE FABRICATION.
22. THE LOCATIONS OF ALL ITEMS SHOWN ON THE DRAWINGS OR CALLED FOR IN THE SPECIFICATIONS THAT ARE NOT DEFINITELY FIXED BY DIMENSIONS ARE APPROXIMATE ONLY. THE EXACT LOCATIONS NECESSARY TO SECURE THE BEST CONDITIONS AND RESULTS MUST BE DETERMINED BY THE PROJECT SITE CONDITIONS AND SHALL HAVE THE APPROVAL OF THE ENGINEER BEFORE BEING INSTALLED. DO NOT SCALE DRAWINGS.
23. CONTRACTOR SHALL BE RESPONSIBLE TO COORDINATE LOCATION AND SIZES OF ALL REQUIRED PENETRATIONS IN WALLS, CEILINGS, FLOORS, AND ROOF WITH GENERAL CONTRACTOR AND ALL OTHER TRADES INVOLVED. ALL PENETRATIONS SHALL BE FIRE STOPPED AS REQUIRED BY CODE.
24. WHEN WORK IS SUBCONTRACTED, IT SHALL BE THE CONTRACTOR'S RESPONSIBILITY TO COORDINATE SUBCONTRACTORS AND THE ASSOCIATED CONTRACTS. WHEN DISCREPANCIES ARISE PERTAINING TO WHICH CONTRACTOR PROVIDES A PARTICULAR ITEM OF THE CONTRACT OR CONTRACTOR PROVIDES FINAL CONNECTIONS FOR A PARTICULAR ITEM OF THE CONTRACT, IT SHALL BE BROUGHT TO THE ATTENTION OF THE CONTRACTOR, WHOSE DECISION SHALL BE FINAL.
25. UNLESS OTHERWISE NOTED, ALL PIPING IS OVERHEAD, TIGHT TO UNDERSIDE OF STRUCTURE OR SLAB, WITH SPACE FOR INSULATION IF REQUIRED.
26. INSTALL PIPING SO THAT ALL VALVES, STRAINERS, UNIONS, TRAPS, FLANGES, AND OTHER APPURTENANCES REQUIRING ACCESS ARE ACCESSIBLE.
27. ALL VALVES SHALL BE INSTALLED SO THAT VALVES REMAINS IN SERVICE WHEN EQUIPMENT OR PIPING ON EQUIPMENT SIDE OF VALVE IS REMOVED.
28. ALL BALANCE VALVES AND BUTTERFLY VALVES SHALL BE PROVIDED WITH POSITION INDICATORS AND MAXIMUM ADJUSTABLE STOPS (MEMORY STOPS).
29. ALL VALVES (EXCEPT CONTROL VALVES) AND STRAINERS SHALL BE FULL SIZE OF PIPE BEFORE REDUCING SIZE TO MAKE CONNECTIONS TO EQUIPMENT AND CONTROLS.
30. INSTALL ALL PIPE WITHOUT FORCING OR SPRINGING.
31. ALL PIPING SHALL CLEAR DOORS AND WINDOWS.
32. ALL VALVES SHALL BE ADJUSTED FOR SMOOTH AND EASY OPERATION.
33. PROVIDE CLEANOUTS IN SANITARY AND STORM DRAINAGE SYSTEMS AT END OF RUNS, AT CHANGES IN DIRECTION, NEAR THE BASE OF STACKS, EVERY 50 FEET IN HORIZONTAL RUNS AND ELSEWHERE AS INDICATED.
34. ALL CLEANOUTS SHALL BE FULL SIZE OF PIPE FOR PIPE SIZES 6 INCHES AND SMALLER AND SHALL BE 6 INCHES FOR PIPE SIZES LARGER THAN 6 INCHES.
35. ALL WORK IS TO BE FREE OF DEFECTS IN WORKMANSHIP AND MATERIALS FOR A PERIOD OF NO LESS THAN ONE YEAR, UNLESS OTHERWISE INDICATED, FROM THE DATE OF FINAL ACCEPTANCE. ALL DEFECTS WHICH DEVELOP OR ARE DISCOVERED WITHIN THIS PERIOD WILL BE REPAIRED BY THE CONTRACTOR, TO THE SATISFACTION OF THE OWNER, AND AT NO ADDITIONAL COST TO THE OWNER.
36. PLUMBING SYSTEM PIPING SHALL NOT BE INSTALLED IN ELEVATOR SHAFTS, ELEVATOR MACHINE ROOMS, ELECTRICAL ROOMS AND INFORMATION TECHNOLOGY (LOW VOLTAGE) ROOMS.
37. BULLHEAD CONNECTIONS IN PIPING ARE PROHIBITED.

FLOOR DRAIN SCHEDULE

UNIT NO.	MANUFACTURER	MODEL NO.	OUTLET	LOCATION	COMMENTS
FD-1	ZURN	Z662	5"	AS SHOWN	HEAVY DUTY, HEEL-PROOF GRATE, VANDAL-PROOF SECURED TOP, NO-HUB CONNECTION, INSIDE CAULK

OIL/WATER SEPARATOR

UNIT NO.	MANUFACTURER	MODEL NO.	MATERIAL	SERVICE	COMMENTS
TR-1	STORMCEPTOR	450i	CONCRETE	STORM	PROVIDE GRADE ADJUSTERS AS REQUIRED. COORDINATE WITH CIVIL DWGS FOR INSTALLED ELEVATION.
TR-2	STORMCEPTOR	450i	CONCRETE	SANITARY	PROVIDE GRADE ADJUSTERS AS REQUIRED. COORDINATE WITH CIVIL DWGS FOR INSTALLED ELEVATION.

PIPE SIZE	PLATE SIZE	BOLT SIZE
UP TO 2"	1/4" X 1 1/4"	1/4"
2 1/2" TO 3"	1/4" X 1 1/4"	3/8"
4" & 5"	1/4" X 1 1/4"	1/2"
6"	3/8" X 1 1/2"	1/2"
8"	3/8" X 1 1/2"	5/8"

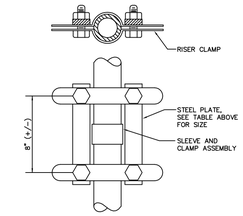

HUBLESS PIPE RISER BRACE DETAIL
NOT TO SCALE
(TO BE USED FOR UNSUPPORTED RISER JOINTS LOCATED BETWEEN FLOORS ONLY)

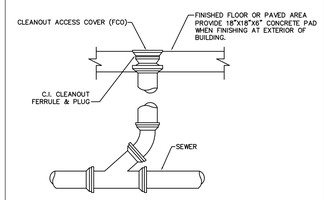

CLEANOUT DETAIL
NOT TO SCALE

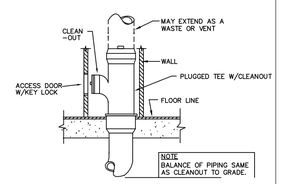

WALL CLEANOUT DETAIL
NOT TO SCALE

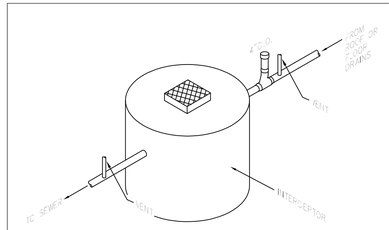

OIL/WATER INTERCEPTOR DETAIL
NOT TO SCALE

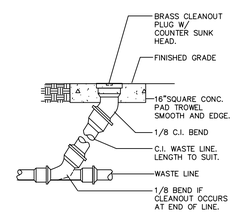

CLEANOUT TO GRADE
NOT TO SCALE

DESMAN
Design Management
edm
architecture • engineering • management
pittsfield, ma
uniontville, ct
chicopee, ma
albany, ny
(888) 336-6500
team@edm-ae.com

Olive Street Parking Facility

Olive Street
Greenfield, MA

CONSTRUCTION DOCUMENTS - BID SET

ISSUE

NO.	DESCRIPTION	DATE
5	CD - Bid Set	09/06/17
2	100% CD	07/10/17

Copyright © 2017 DESMAN, Inc. All rights reserved. No part of these documents may be reproduced in any form or by any means without written permission from DESMAN, Inc.

DRAWING TITLE:
PLUMBING LEGENDS, SCHEDULES AND DETAILS

DRAWING NO:
P001

SCALE: NONE
DATE: 09/06/2017
PROJECT NO: 20-16105.01-1

DES.	DRWN.	CHK'D.
RHL	RHL	BDJ

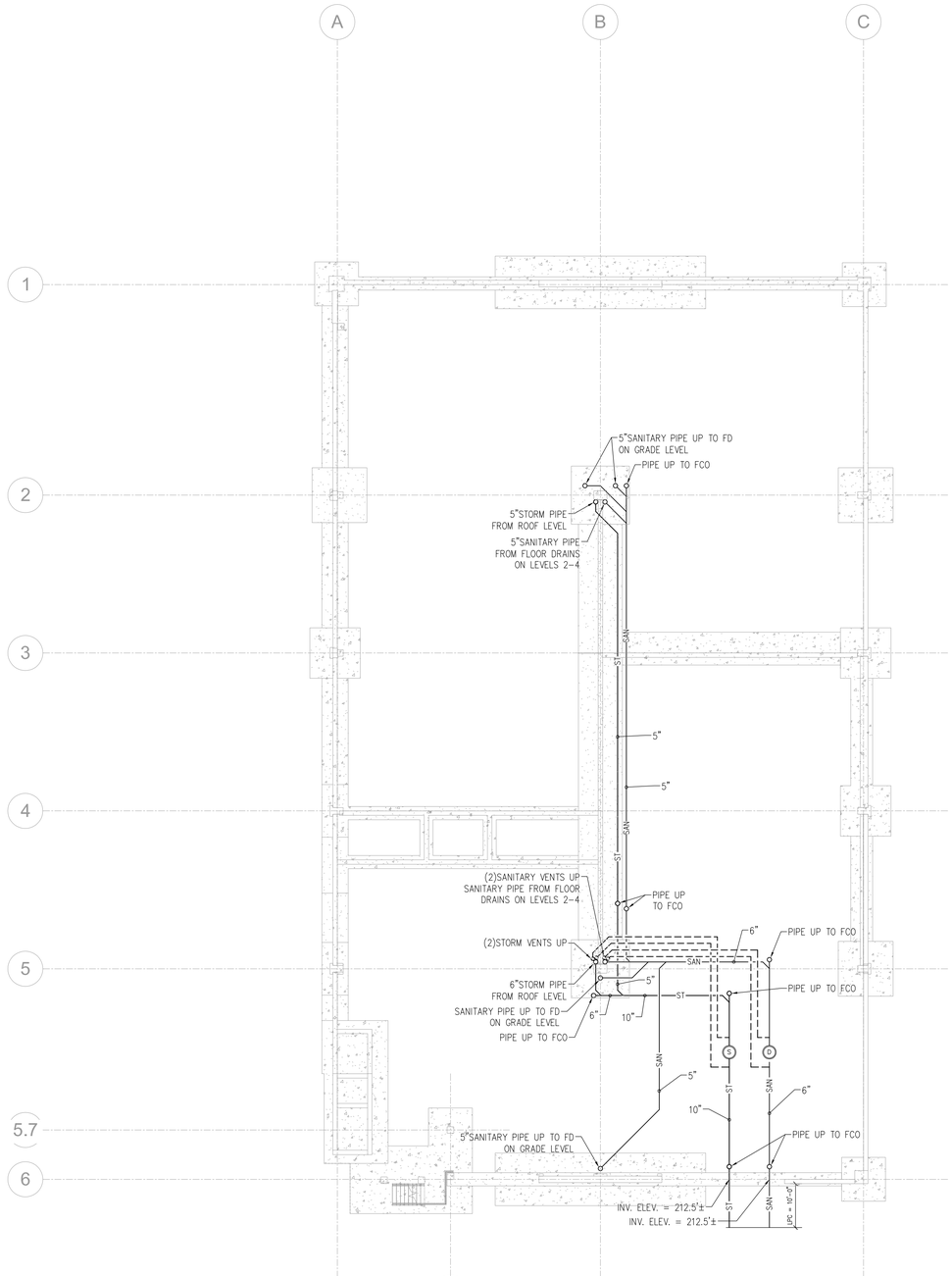

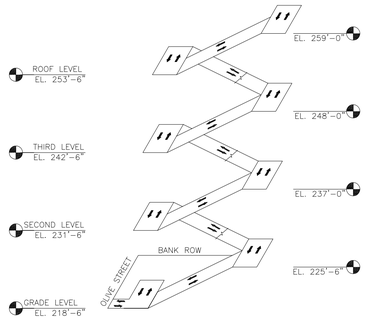

A.4

NOTE:
1. PROVIDE PIPING SLEEVES FOR STORM AND SANITARY PIPING WALL PENETRATIONS.
2. CONTRACTOR RESPONSIBLE FOR ANY CORE DRILLING REQUIRED FOR INSTALLATION.

DESMAN
Design Management

edm
architecture
•
engineering
•
management

pittsfield, ma
unionville, ct
chicopee, ma
albany, ny
(888) 336-6500
team@edm-ae.com

Olive Street Parking Facility

Olive Street
Greenfield, MA

CONSTRUCTION DOCUMENTS - BID SET

ISSUE

NO.	DESCRIPTION	DATE
5	CD - Bid Set	09/06/17
2	100% CD	07/10/17

Copyright © 2017 DESMAN, Inc. All rights reserved. No part of these documents may be reproduced in any form or by any means without written permission from DESMAN, Inc.

DRAWING TITLE:
PLUMBING UNDERGROUND PLAN

DRAWING NO:
P100

SCALE: 1/16" = 1'-0"
DATE: 09/06/2017
PROJECT NO: 20-16105.01-1

DES.	DRWN.	CHK'D.
RHL	RHL	BDJ

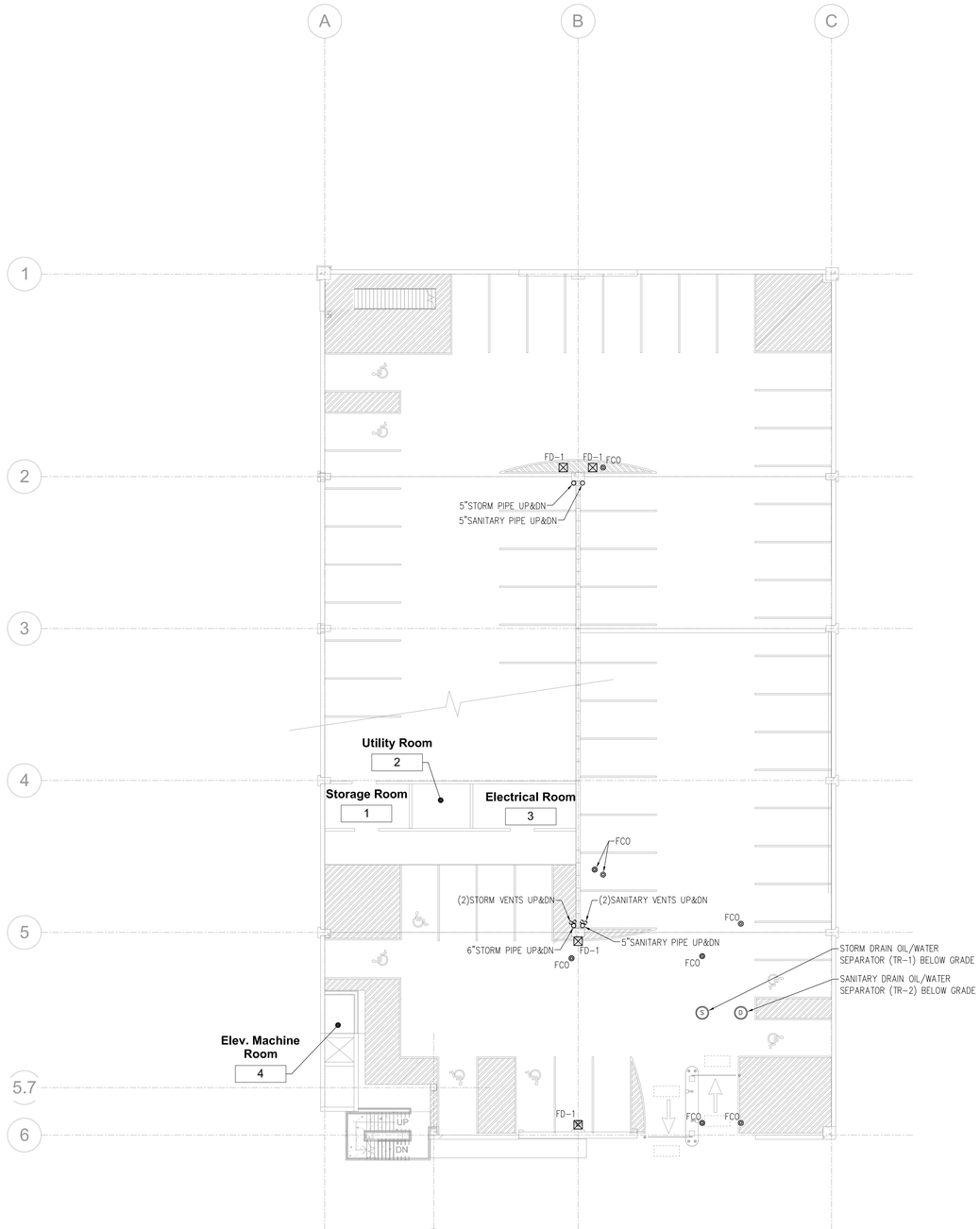

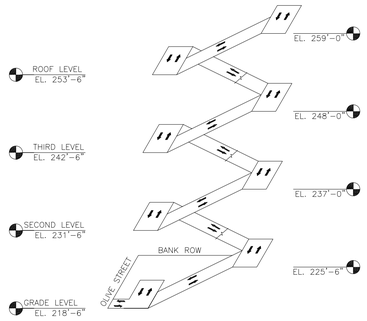

A.4

NOTE:
1. ALL DRAINS ON GRADE LEVEL TO BE ROUTED TO SANITARY DRAIN PIPING.
2. CONTRACTOR RESPONSIBLE FOR ANY CORE DRILLING REQUIRED FOR INSTALLATION.

DESMAN
Design Management

edm
architecture
•
engineering
•
management

pittsfield, ma
unionville, ct
chicopee, ma
albany, ny
(888) 336-6500
team@edm-ae.com

Olive Street Parking Facility

Olive Street
Greenfield, MA

CONSTRUCTION DOCUMENTS - BID SET

ISSUE

NO.	DESCRIPTION	DATE
5	CD - Bid Set	09/06/17
2	100% CD	07/10/17

Copyright © 2017 DESMAN, Inc. All rights reserved. No part of these documents may be reproduced in any form or by any means without written permission from DESMAN, Inc.

DRAWING TITLE:
PLUMBING GRADE LEVEL PLAN

DRAWING NO:
P101

SCALE: 1/16" = 1'-0"
DATE: 09/06/2017
PROJECT NO: 20-16105.01-1

DES.	DRWN.	CHK'D.
RHL	RHL	BDJ

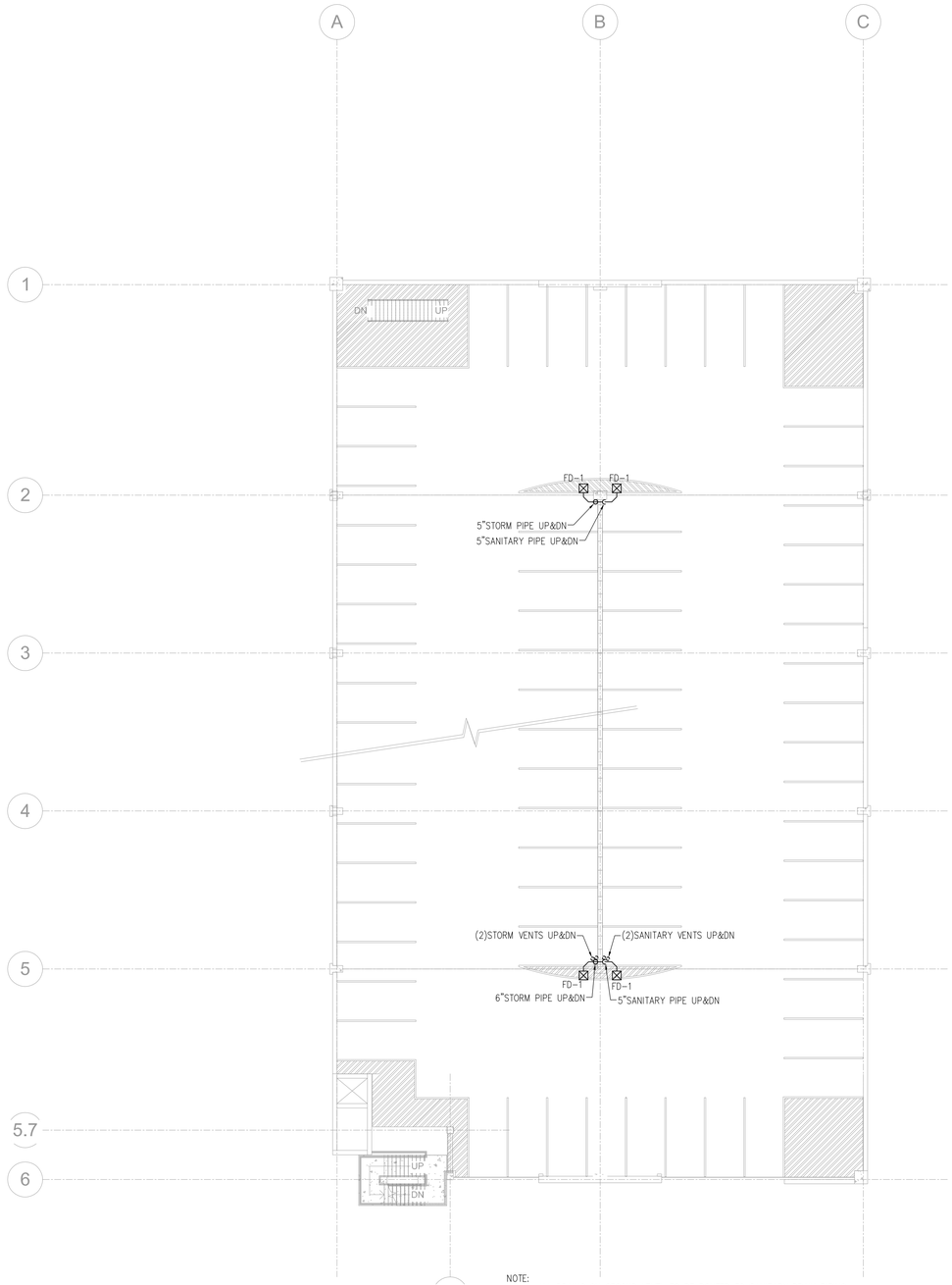

A.4

NOTE:
1. ALL DRAINS ON SECOND LEVEL TO BE ROUTED TO SANITARY DRAIN PIPING.
2. CONTRACTOR RESPONSIBLE FOR ANY CORE DRILLING REQUIRED FOR INSTALLATION.

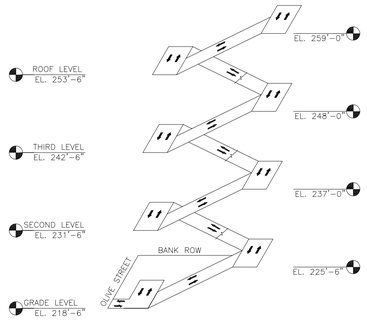

DESMAN
Design Management

edm
architecture
•
engineering
•
management

pittsfield, ma
unionville, ct
chicopee, ma
albany, ny
(888) 336-6500
team@edm-ae.com

Olive Street Parking Facility

Olive Street
Greenfield, MA

CONSTRUCTION DOCUMENTS - BID SET

ISSUE

NO.	DESCRIPTION	DATE
5	CD - Bid Set	09/06/17
2	100% CD	07/10/17

Copyright © 2017 DESMAN, Inc. All rights reserved. No part of these documents may be reproduced in any form or by any means without written permission from DESMAN, Inc.

DRAWING TITLE:
PLUMBING SECOND LEVEL PLAN

DRAWING NO:
P102

SCALE: 1/16" = 1'-0"
DATE: 09/06/2017
PROJECT NO: 20-16105.01-1

DES.	DRWN.	CHK'D.
RHL	RHL	BDJ

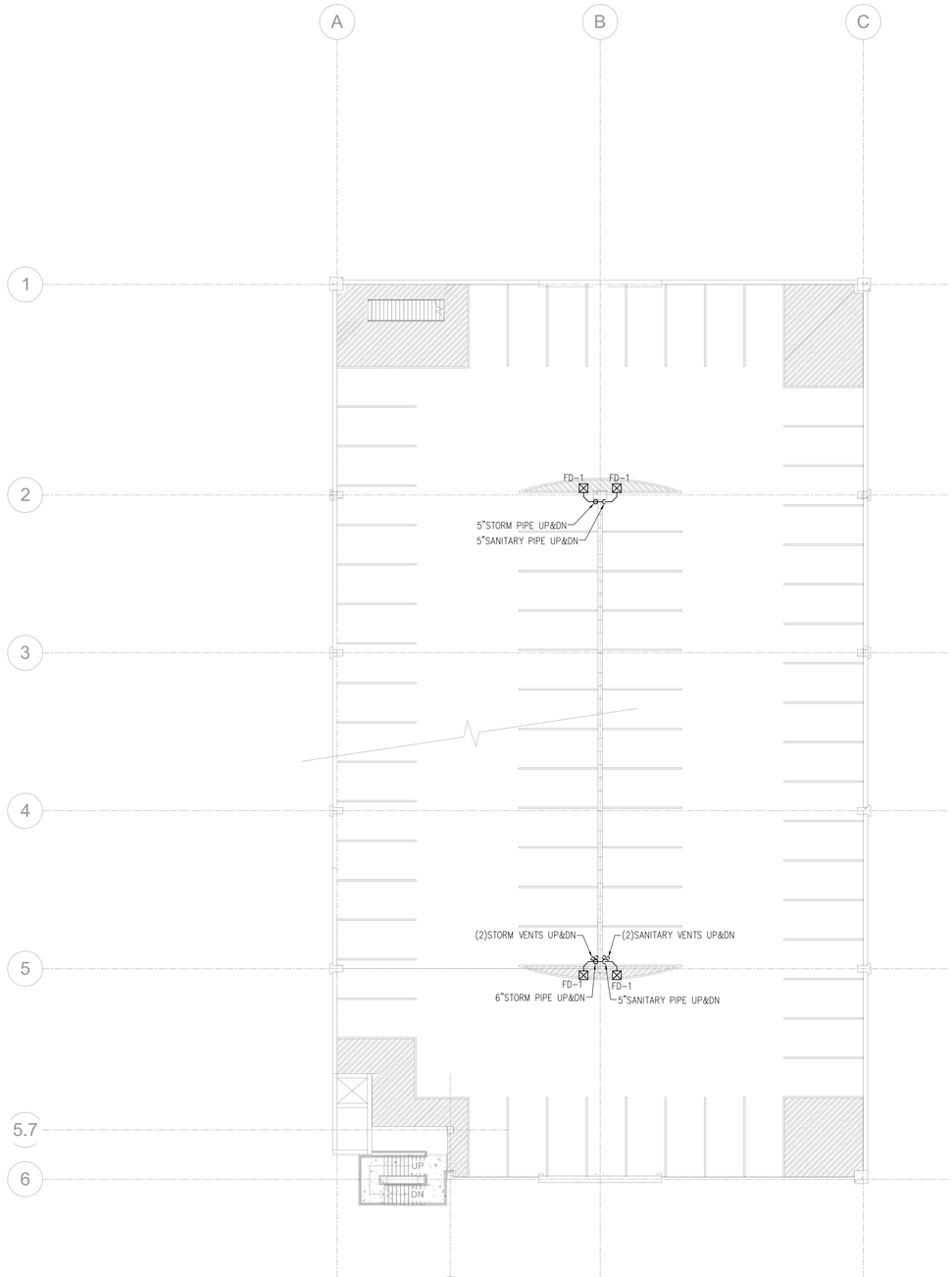

A.4

NOTE:
1. ALL DRAINS ON THIRD LEVEL TO BE ROUTED TO SANITARY DRAIN PIPING.
2. CONTRACTOR RESPONSIBLE FOR ANY CORE DRILLING REQUIRED FOR INSTALLATION.

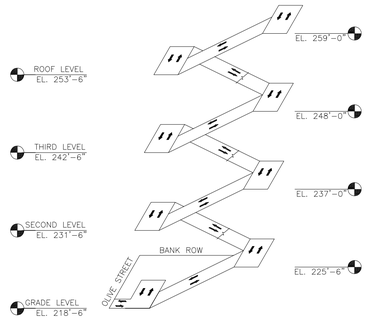

DESMAN
Design Management

edm
architecture
•
engineering
•
management

pittsfield, ma
unionville, ct
chicopee, ma
albany, ny
(888) 336-6500
team@edm-ae.com

Olive Street Parking Facility

Olive Street
Greenfield, MA

CONSTRUCTION DOCUMENTS - BID SET

ISSUE

NO.	DESCRIPTION	DATE
5	CD - Bid Set	09/06/17
2	100% CD	07/10/17

Copyright © 2017 DESMAN, Inc. All rights reserved. No part of these documents may be reproduced in any form or by any means without written permission from DESMAN, Inc.

DRAWING TITLE:
PLUMBING THIRD LEVEL PLAN

DRAWING NO:
P103

SCALE: 1/16" = 1'-0"
DATE: 09/06/2017
PROJECT NO: 20-16105.01-1

DES.	DRWN.	CHK'D.
RHL	RHL	BDJ

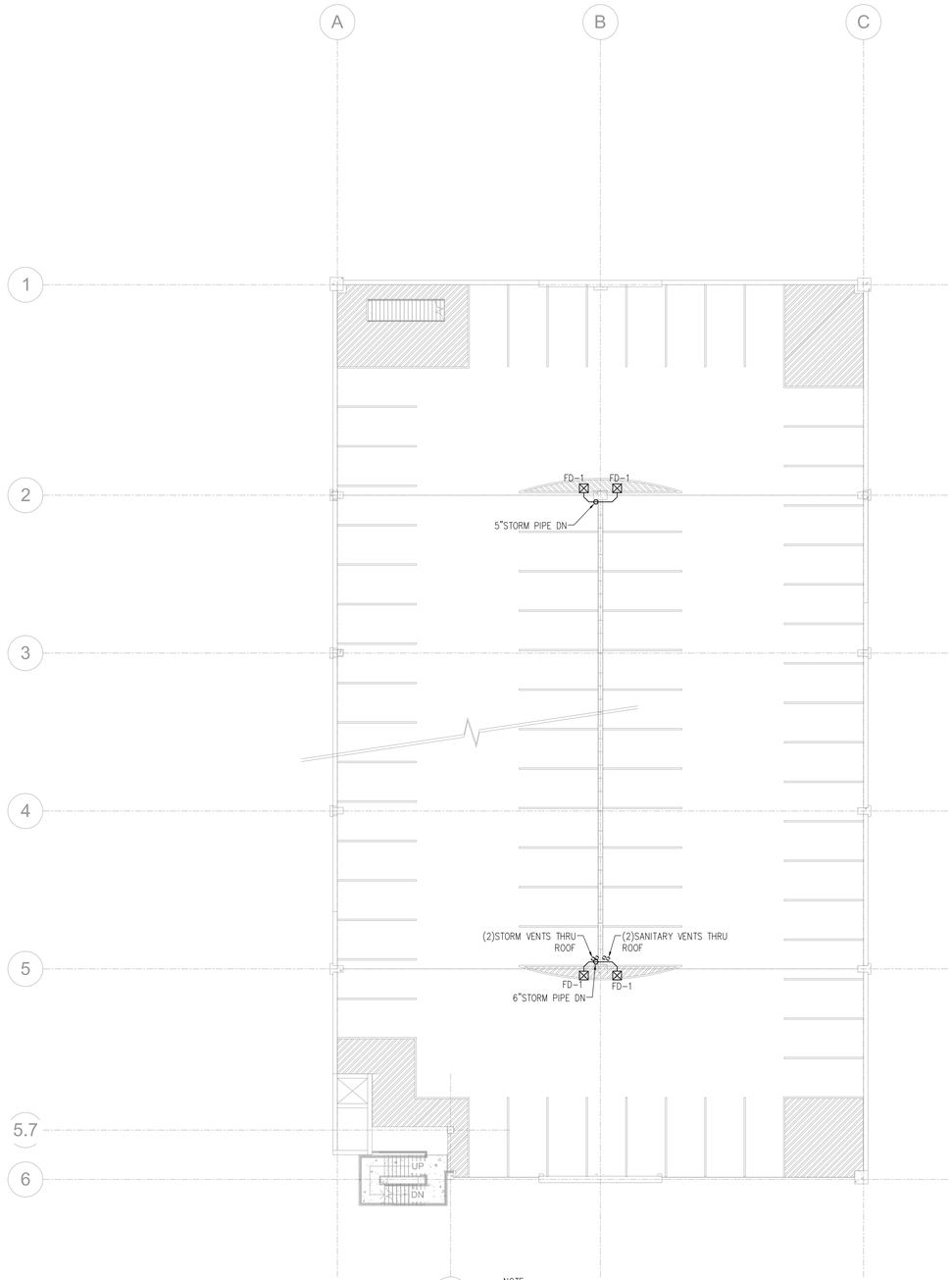

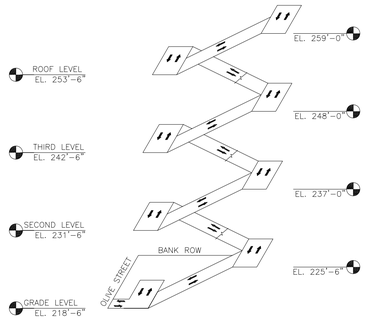

A.4

NOTE:
1. ALL DRAINS ON ROOF LEVEL TO BE ROUTED TO SANITARY DRAIN PIPING.
2. CONTRACTOR RESPONSIBLE FOR ANY CORE DRILLING REQUIRED FOR INSTALLATION.

DESMAN
Design Management

edm
architecture
•
engineering
•
management
pittsfield, ma
unionville, ct
chicopee, ma
albany, ny
(888) 336-6500
team@edm-ae.com

Olive Street Parking Facility

Olive Street
Greenfield, MA

CONSTRUCTION DOCUMENTS - BID SET

ISSUE

NO.	DESCRIPTION	DATE
5	CD - Bid Set	09/06/17
2	100% CD	07/10/17

Copyright © 2017 DESMAN, Inc. All rights reserved. No part of these documents may be reproduced in any form or by any means without written permission from DESMAN, Inc.

DRAWING TITLE:
PLUMBING ROOF LEVEL PLAN

DRAWING NO:
P104

SCALE: 1/16" = 1'-0"
DATE: 09/06/2017
PROJECT NO: 20-16105.01-1

DES.	DRWN.	CHK'D.
RHL	RHL	BDJ