PIPING LEGEND

- VALVE; REFER TO SPECIFICATIONS FOR BODY STYLE
- VALVE WITH MEMORY STOP
- VALVE WITH HOSE BIBB, CAP & CHAIN (DRAIN VALVES)
- PRESSURE REDUCING VALVE
- CHECK VALVE
- BALANCING VALVE
- FLOAT OPERATED VALVE
- ANGLE VALVE (SECTION VIEW)
- ANGLE VALVE (PLAN VIEW)
- SOLENOID VALVE
- TWO WAY AUTOMATIC CONTROL VALVE, MODULATING ACTUATOR
- TWO WAY AUTOMATIC CONTROL VALVE, TWO POSITION ACTUATOR
- THREE WAY AUTOMATIC CONTROL VALVE, MODULATING ACTUATOR
- THREE WAY AUTOMATIC CONTROL VALVE, TWO POSITION ACTUATOR
- AUTOMATIC FLOW CONTROL VALVE (PRESSURE INDEPENDENT)
- COMBINATION FLOWMETER/SHUT OFF/ BALANCING VALVE (CIRCUIT SETTER)
- FM — FLOW MEASURING DEVICE
- FLOW SWITCH
- SAFTEY RELIEF VALVE
- UNION OR FLANGE (AS INDICATED BY PIPE SIZE – SEE SPEC.)
- BLIND FLANGE
- END CAP
- PRESSURE GAUGE WITH GAUGE CLOCK
- STRAINER WITH HOSE BIBB & CAP (GATE VALVE FOR STEAM)
- STRAINER, DUPLEX
- STRAINER
- STRAINER, BASKET TYPE
- PT — PETE'S PLUG
- THERMOMETER
- VB — VACUUM BREAKER
- PT — PRESSURE/TEMPERATURE WELL
- AAV — AUTOMATIC AIR VENT WITH ISOLATION VALVE
- MAV — MANUAL AIR VENT
- TAV — THERMOSTATIC AIR VENT
- REDUCER – ECCENTRIC (FLAT ON BOTTOM OR ON TOP)
- REDUCER (CONCENTRIC)
- FLEXIBLE CONNECTION
- EXPANSION JOINT
- PIPE GUIDE
- FLOAT & THERMOSTATIC STEAM TRAP
- QUICK OPENING VALVE (USED WITH BLOW DOWN)
- QUICK CLOSING VALVE, FUSIBLE LINK (USED WITH FUELS)
- RISE (SINGLE LINE – PLAN VIEW)
- DROP (SINGLE LINE – PLAN VIEW)
- VALVE IN VERTICAL
- TOP TAKEOFF
- BOTTOM TAKEOFF
- PIPE BREAK (SINGLE LINE)
- WM — WATER METER DIAL TYPE
- DIRT LEG
- CO — CLEAN-OUT FOR CONDENSATE DRAIN
- RISE (DOUBLE LINE – PLAN VIEW)
- DROP (DOUBLE LINE – PLAN VIEW)
- PIPE BREAK (DOUBLE LINE)
- DIRECTION OF FLOW IN PIPE
- UP — PITCH PIPE UP IN DIRECTION OF FLOW
- DN — PITCH PIPE DOWN IN DIRECTION OF FLOW
- D — CONDENSATE DRAIN PIPING
- CWS — CONDENSER WATER PIPING
- CHWS — CHILLED WATER PIPING
- R — REFRIGERANT PIPING
- HWS — HOT WATER PIPING
- LPS — STEAM PIPING
- DEMOLITION PIPING
- PC — PUMPED CONDENSATE
- NEW SUPPLY PIPING (CHWS, HWS, CWS, ETC…)
- NEW RETURN PIPING (CHWR, HWR, CWR, ETC…)

DUCTWORK LEGEND

- NEW WORK
- DEMOLITION WORK
- EXISTING TO REMAIN
- CONTROL WIRING
- UP / DN — SUPPLY DUCT (UP & DOWN)
- UP / DN — EXHAUST DUCT (UP & DOWN)
- SUPPLY DIFFUSER
- FLOW — VAV BOX
- FLOW — VAV BOX WITH REHEAT COIL
- SUPPLY TOP REGISTER OR GRILLE (WALL TYPE)
- EXHAUST OR RETURN CEILING REGISTER OR GRILLE
- FLOW — VAV BOX WITH REHEAT COIL AND SOUND ATTENUATOR
- EXHAUST OR RETURN BOTTOM REGISTER OR GRILLE (WALL TYPE)
- FD — FIRE DAMPER
- EXHAUST OR RETURN REGISTER OR TOP GRILLE (WALL TYPE)
- BDD — BACK DRAFT DAMPER
- VANED ELBOW & AIR SPLIT TYPE TYPE DUCT TAKE-OFF
- AUTOMATIC CONTROL DAMPER MODULATING
- VANED ELBOW (PROVIDE ALL SQUARE OR RECTANGULAR ELBOWS WITH VANES EVEN IF SYMBOL IS MISSING)
- AUTOMATIC CONTROL DAMPER TWO POSITION
- VANED ELBOW (SHORT RADIUS)
- 45° SUPPLY — STANDARD BRANCH SUPPLY NO SPLITTER (45° TAP)
- STANDARD RADIUS ELBOW (LONG RADIUS)
- 45° RETURN — STANDARD BRANCH RETURN NO SPLITTER (45° TAP)
- DUCT MOUNTED COIL (HOT WATER OR STEAM COIL)
- ACOUSTICALLY LINED DUCT
- AVS — AIR VOLUME TRAVERSE STATION
- VD — MANUAL VOLUME DAMPER
- FD — SELF-CLOSING FIRE DAMPER W/ACCESS DOOR
- SD — AUTOMATIC SMOKE DAMPER
- ACD — AUTOMATIC CONTROL DAMPER W/ACCESS DOOR
- AD — DUCT ACCESS DOOR

HYDRONIC SYSTEM SPECIFIC ABBREVIATIONS

AS	AIR SEPARATOR
AAV	AUTOMATIC AIR VENT
CH	CHILLER
CHEM	CHEMICAL FEED
CHW	CHILLED WATER
CHWR	CHILLED WATER RETURN
CHWS	CHILLED WATER SUPPLY
CT	COOLING TOWER
CTK	COMPRESSION TANK
CTBD	COOLING TOWER BLOW DOWN
CWR	CONDENSER WATER RETURN
CWS	CONDENSER WATER SUPPLY
CR	COOLING WATER RETURN
CS	COOLING WATER SUPPLY
DOV	DRAIN OFF VALVE
(E)	EXISTING
EWT	ENTERING WATER TEMPERATURE
HB	HOSE BIBB CONN W/CHAINED CAP
HW	HOT WATER
HWCUH	HOT WATER CABINET UNIT HEATER
HWHC	HOT WATER HEATING COIL
HWPHC	HOT WATER PREHEAT COIL
HWRHC	HOT WATER REHEAT COIL
HWR	HOT WATER RETURN
HWS	HOT WATER SUPPLY
HX	HEAT EXCHANGER
LWT	LEAVING WATER TEMPERATURE
NPSH	NET POSITIVE SUCTION HEAD
OS&Y	OUTSIDE STEM AND YOKE
P	PUMP
PW	POTABLE WATER
TDH	TOTAL DYNAMIC HEAD

AIR SYSTEM SPECIFIC ABBREVIATIONS

AC	AIR CONDITIONING
ACD	AUTOMATIC CONTROL DAMPER
ACU	AIR CONDITIONING UNIT
AF	AIR FOIL
AHU	AIR HANDLING UNIT
ALD	ACOUSTICALLY LINED DUCTWORK
ATD	AIR TERMINAL DEVICE
AVS	AIR VOLUME TRAVERSE STATION
BDD	BACKDRAFT DAMPER
BOD	BOTTOM OF DUCT
BI	BACKWARD INCLINED
CA	COMPRESSED AIR
CC	COOLING COIL
CD	CEILING DIFFUSER
CFM	CUBIC FEET PER MINUTE
CG	CEILING GRILLE
DIFF	DIFFUSER
DWDI	DOUBLE WIDTH DOUBLE INLET
DWSI	DOUBLE WIDTH SINGLE INLET
DX	DIRECT EXPANSION
EF	EXHAUST FAN
EG	EXHAUST GRILLE
ESP	EXTERNAL STATIC PRESSURE
F	FAN
FC	FORWARD CURVED
FA	FREE AREA
FCU	FAN COIL UNIT
FD	FIRE DAMPER (W/ ACCESS DOOR)
FLTR	FILTER
FPI	FINS PER INCH
FPT	FAN POWERED TERMINAL BOX
GE	GENERAL EXHAUST
GIH	GRAVITY INTAKE HOOD
GRH	GRAVITY RELIEF HOOD
HC	HEATING COIL
HV	HEATING & VENTILATING UNIT
HU	HUMIDIFIER
LAT	LEAVING AIR TEMPERATURE
LD	LINEAR DIFFUSER
LUVR	LOUVER
LVDR	LOUVERED DOOR
OA	OUTSIDE AIR
OAI	OUTSIDE AIR INTAKE
OBD	OPPOSED BLADE DAMPER
OED	OPEN END DUCT
PHC	PREHEAT COIL
RA	RETURN AIR
RF	RETURN FAN
RG	RETURN GRILLE
RHC	REHEAT COIL
RLF	RELIEF
RR	RETURN REGISTER
RTU	ROOF TOP UNIT
RV	ROOF VENT
SA	SUPPLY AIR
SATT	SOUND ATTENUATOR
SCR	SCREEN
SDMPR	SMOKE DAMPER
SD	SMOKE DETECTOR
SEF	SMOKE EXHAUST FAN
SF	SUPPLY FAN
SFD	COMBINATION AUTOMATIC SMOKE/FIRE DAMOER WITH ACCESS DOOR
SG	SUPPLY GRILLE
SM	SHEETMETAL
SP	STATIC PRESSURE
SR	SUPPLY REGISTER
SWDI	SINGLE WIDTH DOUBLE INLET
SWSI	SINGLE WIDTH SINGLE INLET
TE	TOILET EXHAUST
TF	TRANSFER FAN
TG	TRANSFER GRILLE
TR	TRANSFER
TSP	TOTAL STATIC PRESSURE
UC	UNDERCUT DOOR
VD	VOLUME DAMPER
VAV	VARIABLE VOLUME SUPPLY AIR TERMINAL BOX
VVE	VARIABLE VOLUME EXHAUST AIR TERMINAL BOX

GENERIC HVAC ABBREVIATIONS

°F	DEGREES FAHRENHEIT
°C	DEGREES CELSIUS
ø	DIAMETER
ACV	AUTOMATIC CONTROL VALVE
ADJ	ADJUSTABLE
AFF	ABOVE FINISHED FLOOR
AFG	ABOVE FINISHED GRADE
ALT	ALTERNATE
AP	ACCESS PANEL
ARCH	ARCHITECT
ATC	AUTOMATIC TEMPERATURE CONTROL
ATV	ATMOSPHERIC VENT
AS	AIR SEPARATOR
AVG	AVERAGE
BAS	BUILDING AUTOMATION SYSTEM
BFF	BELOW FINISHED FLOOR
BHP	BRAKE HORSEPOWER
BLDG	BUILDING
BLR	BOILER
BOP	BOTTOM OF PIPE
BSMT	BASEMENT
BTU	BRITISH THERMAL UNIT
BTUH	BRITISH THERMAL UNIT PER HOUR
EQUIP	EQUIPMENT
EX	EXISTING
EXH	EXHAUST
EXP	EXPANSION
FT	FEET
FTR	FINNED TUBE RADIATION
FCV	FLOW CONTROL VALVE
FLEX	FLEXIBLE
FLR	FLOOR
FLRDR	FLOOR DRAIN
FP	FIRE PROTECTION
FPM	FEET PER MINUTE
FT/SEC	FEET PER SECOND
FURN	FURNISHED
FVNR	FULL VOLTAGE NON-REVERSING
G	GAS
GA	GAUGE
GAL	GALLONS
GALV	GALVANIZED
GC	GENERAL CONTRACTOR
GND	GROUND
GPH	GALLONS PER HOUR
NOM	NOMINAL
NTS	NOT TO SCALE
OB	OCTAVE BAND
OD	OUTSIDE DIAMETER
ODP	OPEN DRIP PROOF
PD	PRESSURE DROP
PH	PHASE
PLBG	PLUMBING
POS	PROVIDED BY OTHER SECTION(S)
PRESS	PRESSURE
PRIM	PRIMARY
PSIA	POUNDS PER SQUARE INCH ABSOLUTE
PSID	POUNDS PER SQUARE INCH DIFFERENTIAL
PSIG	POUNDS PER SQUARE INCH GAUGE
PVC	POLYVINYL CHLORIDE
REP	REPRESENTATIVE
RET	RETURN
REQD	REQUIRED
REQS	REQUIREMENTS
RH	RELATIVE HUMIDITY
RM	ROOM
RPM	REVOLUTIONS PER MINUTE
SCH	SCHEDULE
SOV	SOLENOID OPERATED VALVE
SPECS	SPECIFICATIONS
CF	CEILING FAN
CL	CENTERLINE
CLG	CEILING
CO	CLEAN-OUT
COL	COLUMN
COMP	COMPRESSOR
CONC	CONCRETE
CONN	CONNECTION
CONTR	CONTRACTOR
CORR	CORRIDOR
CUH	CABINET UNIT HEATER
D	DRAIN
DB	DRY BULB TEMPERATURE
DDC	DIRECT DIGITAL CONTROL
FP	FIELD PANEL
DIA	DIAMETER
DIM	DIMENSION
DN	DOWN
EA	EACH
EAT	ENTERING AIR TEMPERATURE
ECUH	ELECTRIC CABINET UNIT HEATER
ELEC	ELECTRICAL
ELEV	ELEVATION
HP	HORSEPOWER
HR	HOUR
HZ	HERTZ
HX	HEAT EXCHANGER
ID	INSIDE DIAMETER
IN	INCHES
INSUL	INSULATION
KW	KILOWATT
KVA	KILOVOLT AMPERE
L	LENGTH
LB	POUND
MAX	MAXIMUM
MBH	THOUSAND BTUS
MCA	MINIMUM CIRCUIT AMPS
MCC	MOTOR CONTROL CENTER
MECH	MECHANICAL
MIN	MINIMUM
MTD	MOUNTED
MU	MAKEUP WATER
SQ	SQUARE
SQFT	SQUARE FEET
SS	STAINLESS STEEL
STD	STANDARD
STDBY	STANDBY
STL	STEEL
SUP	SUPPLY
TAV	THERMOSTATIC AIR VENT
TEL	TELEPHONE
TEMP	TEMPERATURE
TOD	TOP OF DUCT
TOP	TOP OF PIPE
TYP	TYPICAL
UH	UNIT HEATER
V	VENT
VEL	VELOCITY
VERT	VERTICAL
VFD	VARIABLE FREQUENCY DRIVE
VTR	VENT THROUGH ROOF
W	WIDTH
W/	WITH
W/O	WITHOUT
WB	WET BULB TEMPERATURE
WF	WIDE FLANGE
WG	WATER GAUGE
WRT	WITH RESPECT TO

FLOW DIAGRAM EQUIP SYMBOLS

- VFD — VARIABLE FREQUENCY DRIVE
- AIR SEPARATOR
- PUMP
- BOILER
- CONDENSER / EVAPORATOR — CHILLER
- SHELL & TUBE HEAT EXCHANGER
- EXPANSION TANK COMPRESSION TANK
- COOLING TOWER (OPEN CIRCUIT)
- CHEMICAL FEED SYSTEM

EQUIPMENT TAG SYMBOLS

- EQUIPMENT NOT REQUIRING ELECTRIC SERVICE — TAG / DATA / DATA — TAG / NO
- SEE SCHEDULE FOR PERFORMANCE REQUIREMENTS — TAG / DATA — TAG / DATA / DATA — EQUIPMENT REQUIRING ELECTRIC SERVICE

NOTE: REFER TO SCHEDULES FOR DEFINITION OF EQUIPMENT SPECIFIC DATA LISTED WITHIN TAG BLOCKS

HYDRONIC SYSTEMS

- CH — CHILLER
- CT — COOLING TOWER
- P — PUMP
- HX — HEAT EXCHANGER
- ET — EXPANSION TANK

AIR SYSTEMS

- AHU — AIR HANDLING UNIT
- F — FAN
- RTU — ROOF TOP UNIT

CALL OUT SYMBOLS

- M.X — SECTION DESIGNATION / SHEET NUMBER
- 1 / M.X — DETAIL DESIGNATION / SHEET NUMBER
- S/R 1 — SUPPLY OR RETURN AIR RISER DESIGNATION
- HWS 1 — PIPING SYSTEM RISER DESIGNATION
- AIR FLOW
- T — TEMPERATURE SENSOR OR THERMOSTAT
- H — HUMIDITY SENSOR OR HUMIDISTAT
- P — STATIC PRESSURE SENSOR
- SD — SMOKE DETECTOR
- REVISION CLOUD
- 1 — REVISION NUMBER
- CONNECT TO EXISTING
- LIMIT OF DEMOLITION

GENERAL NOTES

GENERAL NOTES APPLY TO ALL DRAWINGS.

1. ALL MECHANICAL WORK IS INDICATED DIAGRAMMATICALLY. THE CONTRACTOR IS RESPONSIBLE FOR HIRING THE PROFESSIONAL SERVICES NECESSARY TO TAKE THIS SCHEMATIC DESIGN AND PROVIDE A PERMIT AND CONSTRUCTION SET OF DOCUMENTS. THIS SAME PROFESSIONAL SERVICES FIRM(S) SHALL PROVIDE ADMINISTRATION SERVICES IN ADDITION TO DESIGN AND FINAL CONSTRUCTION AFFIDAVITS. ALL PROFESSIONAL A/E SERVICES NECESSARY TO IMPLEMENT THIS PROJECT WILL BE BORNE BY THE CONTRACTOR. EXACT LOCATIONS OF ALL COMPONENTS ARE TO BE DETERMINED IN THE FIELD AND BY THE ACTUAL BUILDING CONDITIONS. EXISTING DUCTS, PIPING OR EQUIPMENT INTERFERING WITH OTHER INSTALLATIONS SHALL BE RELOCATED AT NO ADDITIONAL COST TO THE OWNER.
2. THIS PROJECT SHALL BE DESIGNED AND INSTALLED IN ACCORDANCE WITH ALL STATE, TOWN, AND FEDERAL CODES, IN ADDITION TO MANUFACTURER'S APPROVED PUBLISHED LITERATURE.
3. COORDINATE THE INSTALLATION OF ALL NEW EQUIPMENT AND PROVIDE ADEQUATE ACCESSIBILITY FOR SERVICE AND/OR REPLACEMENT.
4. THIS CONTRACTOR AND HIS DESIGN TEAM SHALL INSPECT THE EXISTING FIELD CONDITIONS AT THE SITE AND THE "AS-BUILT" BASE BUILDING CONTRACT DOCUMENTS PRIOR TO THE START OF ANY WORK TO DETERMINE WHAT EFFECT THE EXISTING CONDITIONS WILL HAVE ON HIS WORK. .
5. THIS CONTRACTOR AND HIS DESIGN TEAM SHALL CONNECT THEIR WORK TO THE VARIOUS EXISTING PIPING, DUCTWORK, AND CONTROL SYSTEMS IN THE BASE BUILDING. THE NEW WORK SHALL BE COMPATIBLE WITH THE EXISTING SYSTEMS. LOCATION OF EQUIPMENT OR THE ROUTING OF THE VARIOUS SYSTEMS AS WELL AS OPENINGS IN FLOOR SLABS OR WALLS SHALL BE GOVERNED BY THE EXISTING CONDITIONS AS THEY APPEAR IN THE FIELD.
6. CARE SHALL BE TAKEN DURING THE INSTALLATION TO NOT DAMAGE OR INTERRUPT BUILDING SYSTEMS AND SERVICES THAT ARE ALREADY INSTALLED. DAMAGE TO SUCH SYSTEMS OR EQUIPMENT CAUSED BY THIS CONTRACTOR DURING INSTALLATION SHALL BE REPAIRED AND/OR REPLACED AT THIS CONTRACTOR'S EXPENSE TO THE COMPLETE SATISFACTION OF THE BUILDING OWNER.
7. SHUTDOWN OF EXISTING SYSTEMS FOR CONNECTION TO EXISTING SERVICES SHALL BE COORDINATED WITH THE BUILDING OWNER. THIS CONTRACTOR SHALL SUBMIT REQUESTS, WHERE THEY AFFECT THE OPERATION OF THE BUILDING SYSTEMS, AT LEAST ONE WEEK IN ADVANCE OF ANY REQUIRED SHUTDOWN. THE ACTUAL SHUTDOWN PERIOD SHALL BE AS SHORT AS POSSIBLE AND AT A TIME MUTUALLY AGREEABLE TO THE BUILDING OWNER AND THE CONSTRUCTION MANAGER/GENERAL CONTRACTOR.
8. ALL WORK SHALL BE COORDINATED WITH ALL TRADES INVOLVED PRIOR TO INSTALLATION. OFFSETS IN PIPING AND DUCTS AND TRANSITIONS AROUND OBSTRUCTIONS SHALL BE PROVIDED AT NO ADDITIONAL COST TO THE OWNER.
9. VERIFY ALL EQUIPMENT CONNECTIONS WITH MANUFACTURER'S CERTIFIED DRAWINGS. VERIFY AND PROVIDE DUCT AND/OR PIPE TRANSITIONS TO FURNISHED EQUIPMENT. FIELD VERIFY AND COORDINATE ALL DIMENSIONS BEFORE FINAL DESIGN AND FABRICATION.
10. ALL MATERIALS AND EQUIPMENT UNLESS SPECIFICALLY INDICATED AS REUSED, SHALL BE NEW.
11. ACCESS PANELS SHALL BE PROVIDED TO ALLOW FOR CLEANING OF ALL CONCEALED MECHANICAL EQUIPMENT.
12. EXISTING THERMOSTATS SHALL BE PROTECTED DURING CONSTRUCTION.
13. ALL ROUGH OPENINGS THROUGH EXTERIOR WALLS SHALL BE SEALED/CAULKED WATERTIGHT WITH ELASTOMERIC FIREPROOF SEALANT.
14. THE FIRE PROOFING OF THE BUILDING STRUCTURE IS NOT TO BE REMOVED FOR THE INSTALLATION OF HANGERS, SUPPORTS, DUCTWORK, ETC. IF FIRE PROOFING IS DAMAGED, IT SHALL BE REPAIRED AT THE EXPENSE OF THE TRADE.
15. SEAL ALL PIPE PENETRATIONS THROUGH FIRE RATED PARTITIONS, WALLS AND FLOORS WITH HILTI OR 3M SILICONE BASE ELASTOMERIC UL 1479 SEALANT.
16. ALL MISCELLANEOUS STRUCTURAL SUPPORTS REQUIRED FOR HVAC EQUIPMENT, DUCTWORK AND PIPING INSTALLATION SHALL BE DESIGNED BY THE CONTRACTORS DESIGN TEAM AND INSTALLED BY THE CONTRACTOR.
17. ALL MAIN BRANCH PIPES FROM SHAFTS OR TUNNELS SHALL HAVE ISOLATION VALVES NEAR SHAFT. PROVIDE SHUT-OFF VALVE ON SUPPLY AND COMBINATION BALANCING SHUT-OFF VALVE ON RETURN. PROVIDE SHUTOFF VALVE AT CONNECTION TO EXISTING PIPING. ALL REFRIGERATION PIPING SHALL BE DESIGNED PER 2016 ASME B31.5 "REFRIGERATION PIPING AND HEAT TRANSFER COMPONENTS".

MECHANICAL CONSULTANTS

B2Q Associates, Inc.
100 Burtt Road, Suite 212
Andover, MA 01870
P: (978) 208-0609
www.b2qassociates.com

This drawing is not intended, nor shall be used for construction unless the signed seal of a design professional is affixed.

KEY PLAN

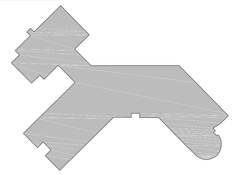

REV.	DATE	DESCRIPTION
A	06/08/2018	BOD TO SUPPORT DESIGN/BUILD RFP

CUSTOMER

TOWN OF GREENFIELD
14 COURT SQUARE
GREENFIELD, MASSACHUSETTS 01301

PROJECT

GREEN RIVER SCHOOL HVAC UPGRADES

TITLE

MECHANICAL SYMBOLS LEGEND

DRWN BY: JSB	DATE: 06/08/2018
CHKD BY: MAM	DATE: 06/08/2018
SCALE: NONE	SHEET SIZE: E1

M-001

SHEET 01 OF 07

#	Space Name	Area	Code Based Estimated Occupants	Operable Windows Available?	Window Area Required	Est. Window Area	Operable Windows Acceptable?	Area Based Ventilaton Rate	Occupant Based Ventilation	Total Ventilation	Exhaust	Total Outside Air (V+MUA)	External Heat Load (w. SF)
		ft2	*People*	*Y/N*	*ft2*	*ft2*	*Y/N*	*cfm/ft2*	*cfm/person*	*cfm*	*cfm*	*cfm*	Btu/hr.
CC	Central Corridor	969	0		39			0.06	0	58		58	9,846
CS	South Corridor	1,028	0		41			0.06	0	62		62	11,508
CW	West Corridor	528	0		21			0.06	0	32		32	9,210
CE	East Corridor	736	0		29			0.06	0	44		44	8,540
0	Lobby	164	4		7			0.06	5	30		30	1,921
1	Main Office	194	2	Y	8	8	Y	-	-	-		-	3,173
2	Girls Bath	331	0		13			0	0	0	-400	400	3,793
3	Custodian Room	187	0		7			0.12	0	22	-50	72	1,169
4	Classroom	1,030	25	Y	41	24		0.12	10	374		374	23,211
5	Classroom	970	25	Y	39	24		0.12	10	366		366	23,629
6	Classroom	941	25	Y	38	24		0.12	10	353		363	23,385
7	Classroom	926	25	Y	37	24		0.12	10	361		361	22,120
8	Kitchen	279	4		11			0.12	7.5	63	-1200	63	4,479
9	Storage	154	0		6			0.12	0	18		18	3,209
10	Bathroom	30	0		1			0	0	0	-50	50	188
11	Cafeteria & Gym	3,536	354		141			0.3	0	1,061		1,061	155,736
12	Staff Room	458	10	Y	18	12		0.06	5	77		77	7,943
13	Bathroom	38	0		2			0	0	0		0	238
14	Tech. Lab	977	25	Y	39	12		0.12	10	367		367	11,754
15	Media Room	921	25	Y	37	36		0.12	10	361		361	14,810
16	Staff Men's Bathroom	103	0		4			0	0	0	-50	50	644
17	Staff Women's Bathroom	103	0		4			0	0	0	-50	50	644
18	Health	223	11	Y	9	12	Y	-	-	-		-	8,413
19	Music	508	25	Y	20	12		0.12	10	315		315	9,134
21	Staff Room	240	10		10			0.06	5	64		64	1,500
22	Classroom	215	11	Y	9	18	Y	-	-	-		-	5,515
23	Classroom	988	25	Y	40	24		0.12	10	369		369	23,756
24	Kindergarten	1,015	25	Y	41	42	Y	-	-	-		-	37,031
25	Classroom	911	25	Y	36	24		0.12	10	359		359	21,970
26	Supply Storage	161	0		6			0.12	0	19	-50	69	1,636
27	Boy's Bath	261	0		10			0	0	0	-550	550	3,355
28	Principal Office	210	2	Y	8	8	Y	-	-	-		-	3,273
29	Bathroom	46	0		2			0	0	0	-100	100	784

NOTES:
1. CONTRACTOR SHALL FIELD VERIFY ALL EXISTING CONDITIONS AND SCALED DIMENSIONS AS INDICATED ON THIS PLAN.
2. ROOM BY ROOM HEATING AND COOLING LOAD SUMMARIES CAN BE FOUND IN APPENDIX D OF THE MECHANICAL BASIS OF DESIGN NARRATIVE REV0 DATED 6/8/2018. TRANCE 700 ROOM BY ROOM LOAD DESIGN OUTPUT REPORTS CAN BE FOUND IN APPENDIX E OF THAT SAME REPORT.

1 SPACE IDENTIFICATION PLAN

SCALE: 1/8"=1'-0"

MECHANICAL CONSULTANTS

B2Q Associates, Inc.
100 Burtt Road, Suite 212
Andover, MA 01870
P: (978) 208-0609
www.b2qassociates.com

This drawing is not intended, nor shall be used for construction unless the signed seal of a design professional is affixed.

KEY PLAN

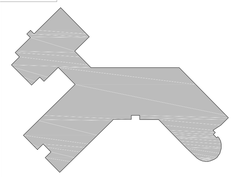

REV.	DATE	DESCRIPTION
A	06/08/2018	BOD TO SUPPORT DESIGN/BUILD RFP

CUSTOMER

TOWN OF GREENFIELD

14 COURT SQUARE
GREENFIELD, MASSACHUSETTS 01301

PROJECT

GREEN RIVER SCHOOL HVAC UPGRADES

TITLE

EXISTING SPACE IDENTIFICATION PLAN

DRWN BY: JSB	DATE: 06/08/2018
CHKD BY: MAM	DATE: 06/08/2018
SCALE: SEE PLAN	SHEET SIZE: E1

M-002

SHEET 02 OF 07

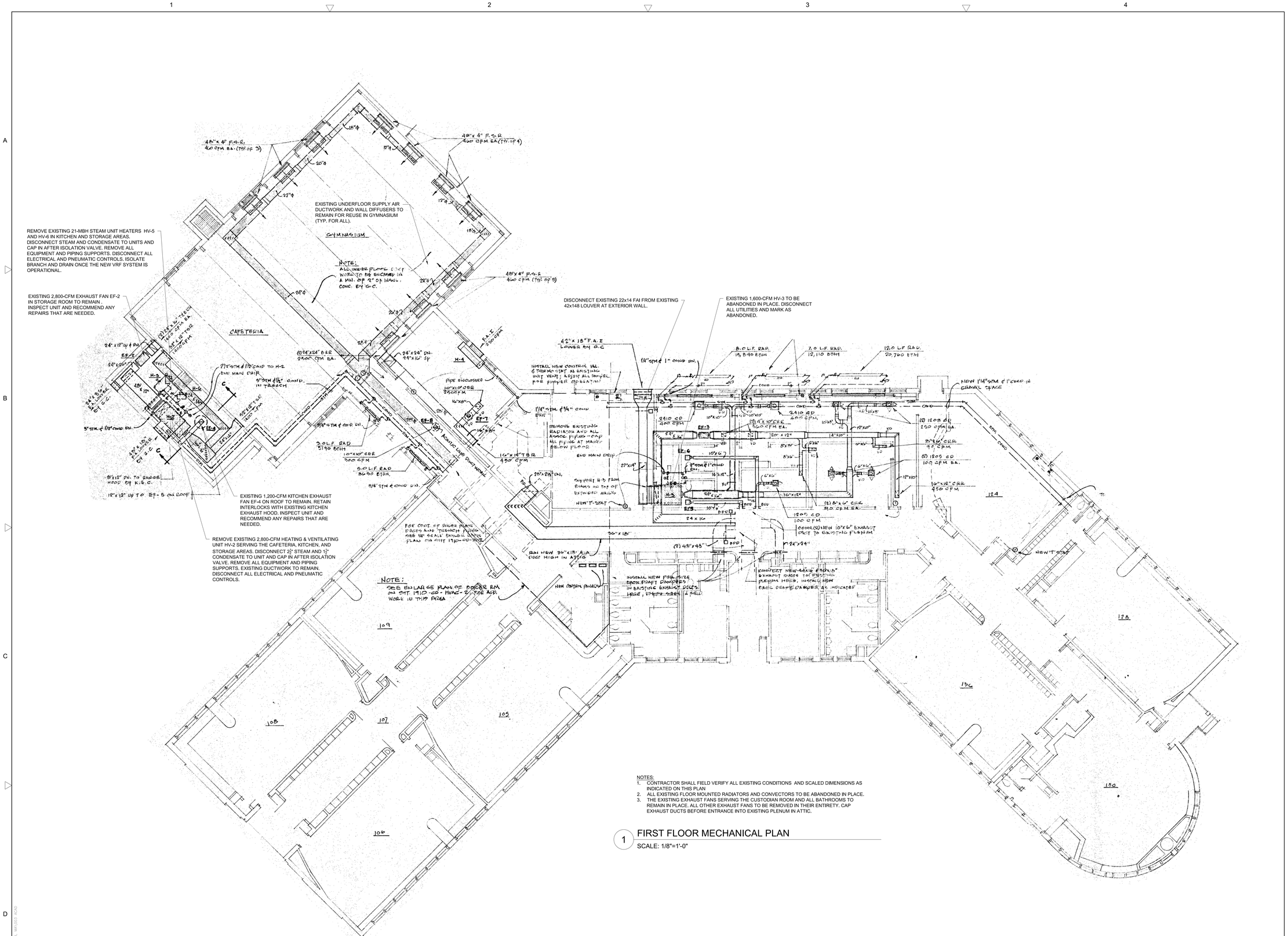

NOTES:
1. CONTRACTOR SHALL FIELD VERIFY ALL EXISTING CONDITIONS AND SCALED DIMENSIONS AS INDICATED ON THIS PLAN
2. ALL EXISTING FLOOR MOUNTED RADIATORS AND CONVECTORS TO BE ABANDONED IN PLACE.
3. THE EXISTING EXHAUST FANS SERVING THE CUSTODIAN ROOM AND ALL BATHROOMS TO REMAIN IN PLACE. ALL OTHER EXHAUST FANS TO BE REMOVED IN THEIR ENTIRETY. CAP EXHAUST DUCTS BEFORE ENTRANCE INTO EXISTING PLENUM IN ATTIC.

1 FIRST FLOOR MECHANICAL PLAN

SCALE: 1/8"=1'-0"

MECHANICAL CONSULTANTS

B2Q Associates, Inc.
100 Burtt Road, Suite 212
Andover, MA 01870
P. (978) 208-0609
www.b2qassociates.com

This drawing is not intended, nor shall be used for construction unless the signed seal of a design professional is affixed.

KEY PLAN

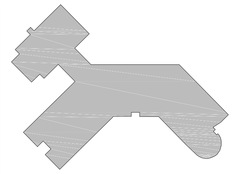

REV.	DATE	DESCRIPTION
A	06/08/2018	BOD TO SUPPORT DESIGN/BUILD RFP

CUSTOMER

TOWN OF GREENFIELD

14 COURT SQUARE
GREENFIELD, MASSACHUSETTS 01301

PROJECT

GREEN RIVER SCHOOL HVAC UPGRADES

TITLE

FIRST FLOOR MECHANICAL DEMOLITION PLAN

DRWN BY: JSB	DATE: 06/08/2018
CHKD BY: MAM	DATE: 06/08/2018
SCALE: NONE	SHEET SIZE: E1

MD-100

SHEET 03 OF 07

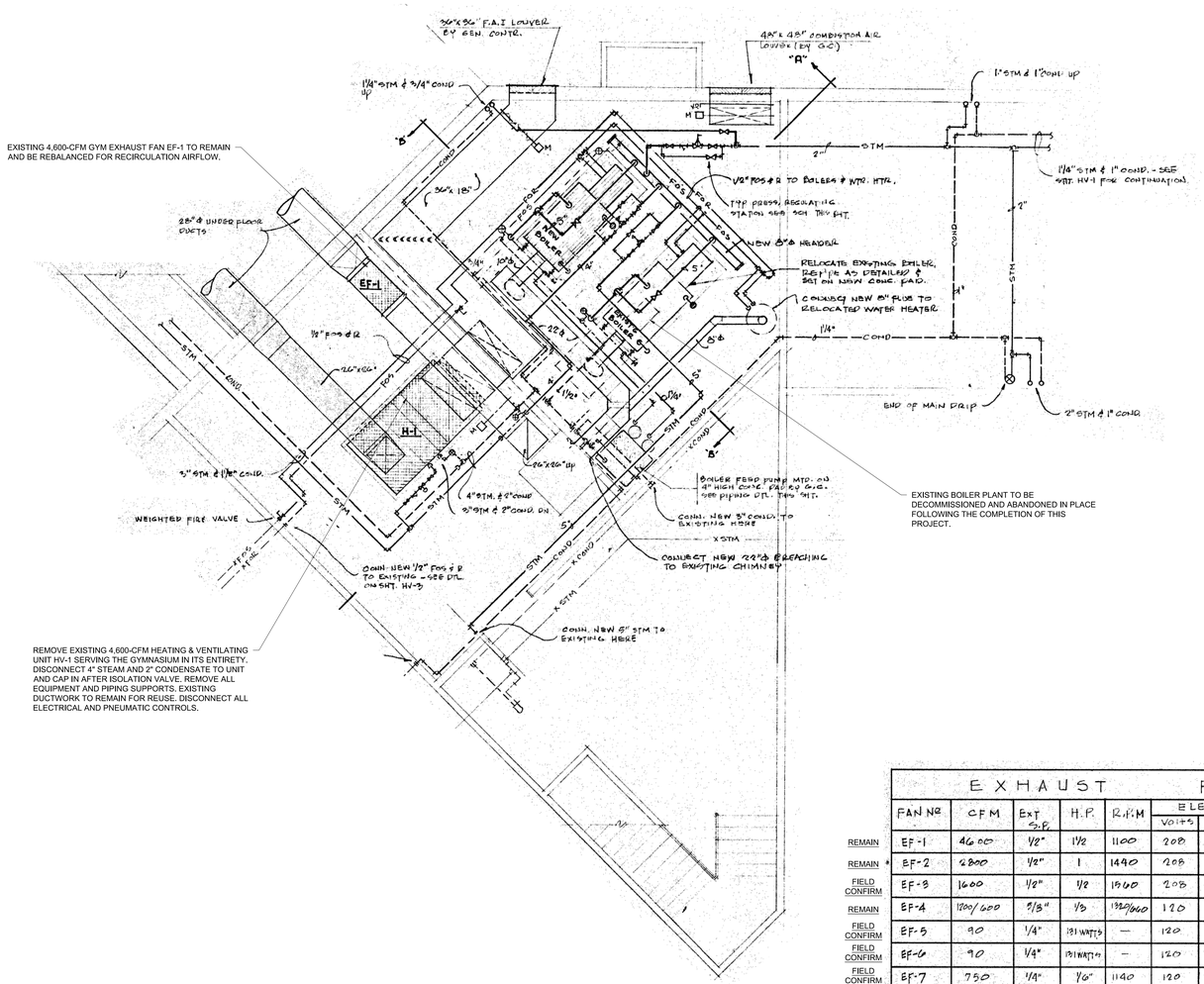

NOTES:
1. CONTRACTOR SHALL FIELD VERIFY ALL EXISTING CONDITIONS AND SCALED DIMENSIONS AS INDICATED ON THIS PLAN.
2. SCHEDULES ARE FROM 1993 RENOVATION AND GYMNASIUM ADDITION. THERE IS ADDITIONAL EXISTING MECHANICAL EQUIPMENT (FANS, CONVECTORS, FAN COILS, ETC.) THAT ARE NOT INDICATED. FIELD VERIFY AND CONFIRM WITH OWNER TO REMOVE, REPLACE, REUSE, OR ABANDON IN PLACE.

1 BASEMENT MECHANICAL PART PLAN

SCALE: 1/8"=1'-0"

EXHAUST FAN SCHEDULE

	FAN NO.	CFM	EXT S.P.	H.P.	R.P.M.	ELECTRICAL VOLTS	PHASE	CYCLE	TYPE	PRE-FAB CURB	BACK DRAFT DAMPER	ISOLATORS	DISC. SWITCH	MFG. MODEL NO.	REMARKS
REMAIN	EF-1	4600	1/2"	1 1/2	1100	208	3	60	IN-LINE	NONE	—	YES	YES	JENN-185 ILB	
REMAIN *	EF-2	2800	1/2"	1	1440	208	3	60	IN-LINE	NONE	—	YES	YES	JENN-145 ILB	
FIELD CONFIRM	EF-3	1600	1/2"	1/2	1960	208	3	60	IN-LINE	NONE	—	YES	YES	JENN-124 ILB	
REMAIN	EF-4	1200/600	5/8"	1/3	1320/660	120	1	60	ROOF-UPBLAST	YES	GRAVITY	YES	YES	JENN-149BRTU	TWO SPEED MOTOR, 12" HIGH CURB
FIELD CONFIRM	EF-5	90	1/4"	181 WATTS	—	120	1	60	CEILING	NONE	GRAVITY	YES	YES	JENN-400J	* SPEED CONT. SWITCH MTD @ FAN HOUSING
FIELD CONFIRM	EF-6	90	1/4"	181 WATTS	—	120	1	60	CEILING	NONE	GRAVITY	YES	YES	JENN-400J	* SPEED CONT. SWITCH MTD @ FAN HOUSING
FIELD CONFIRM	EF-7	750	1/4"	1/6"	1140	120	1	60	ROOF	YES	GRAVITY	YES	YES	JENN-111CR	* SPEED CONT. SWITCH MTD. @ FAN HOUSING
FIELD CONFIRM	EF-8	800	1/8"	1/15	1550	120	1	60	ROOF	YES	GRAVITY	YES	YES	JENN-80CR	* SPEED CONT. SWITCH MTD @ FAN HOUSING

HEATING AND VENTILATING EQUIPMENT SCHEDULE

	SYMBOL	AREA SERVED	CFM	MIN FRESH AIR CFM	HEATING BTU/H	AIR EXIT.	AIR LVG	STM LBS/HR	MOTOR H.P.	MOTOR VOLTS	MOTOR PHASE	FAN RPM	FAN T.S.P.	MAKE & MODEL	REMARKS
DEMO	H-1	GYMNASIUM	4600	1150	505,430	94°	98°	523	3	208	3	800	1.5"	TRANE CLIMATE CH. # 10A	W/ INTERNAL FACE & BY-PASS DAMPER / MOD. COIL
DEMO	H-2	CAFETERIA	2800	700	310,622	94°	103°	322	1	208	3	650	1.5"	TRANE CLIMATE CH. # 8A	W/ INTERNAL FACE & BY-PASS DAMPER / MOD. COIL,
ABANDON	H-3	GUID/TEACHERS	1600	400	89,696	94°	99°	93	3/4	208	3	900	1.0"	TRANE CLIMATE CH # 6A	
ABANDON	H-4	SPECIAL ED.	1000	250	37,603	94°	98°	39	1/6	120	1			TRANE UNIT VENT # 10	W/ 6" FALSE BACK
DEMO	H-5	STORAGE	300	0	20,736	60°	112°	21.4	9 WATTS	120	1	1100	1/8"	STERLING HG-24	W/ ADJUSTABLE DISCHARGE GRILLE
DEMO	H-6	KITCHEN	300	0	20,736	60°	112°	21.4	9 WATTS	120	1	1100	1/8"	STERLING HG-24	W/ ADJUSTABLE DISCHARGE GRILLE

MECHANICAL CONSULTANTS

B2Q Associates, Inc.
100 Burtt Road, Suite 212
Andover, MA 01870
P. (978) 208-0609
www.b2qassociates.com

This drawing is not intended, nor shall be used for construction unless the signed seal of a design professional is affixed.

KEY PLAN

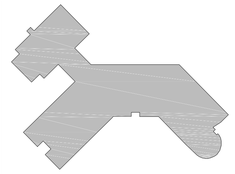

REV.	DATE	DESCRIPTION
A	06/08/2018	BOD TO SUPPORT DESIGN/BUILD RFP

CUSTOMER

TOWN OF GREENFIELD

14 COURT SQUARE
GREENFIELD, MASSACHUSETTS 01301

PROJECT

GREEN RIVER SCHOOL HVAC UPGRADES

TITLE

BASEMENT MECHANICAL DEMOLITION PLAN & EXISTING SCHEDULES

DRWN BY: JSB	DATE: 06/08/2018
CHKD BY: MAM	DATE: 06/08/2018
SCALE: NONE	SHEET SIZE: E1

MD-101

SHEET 04 OF 07

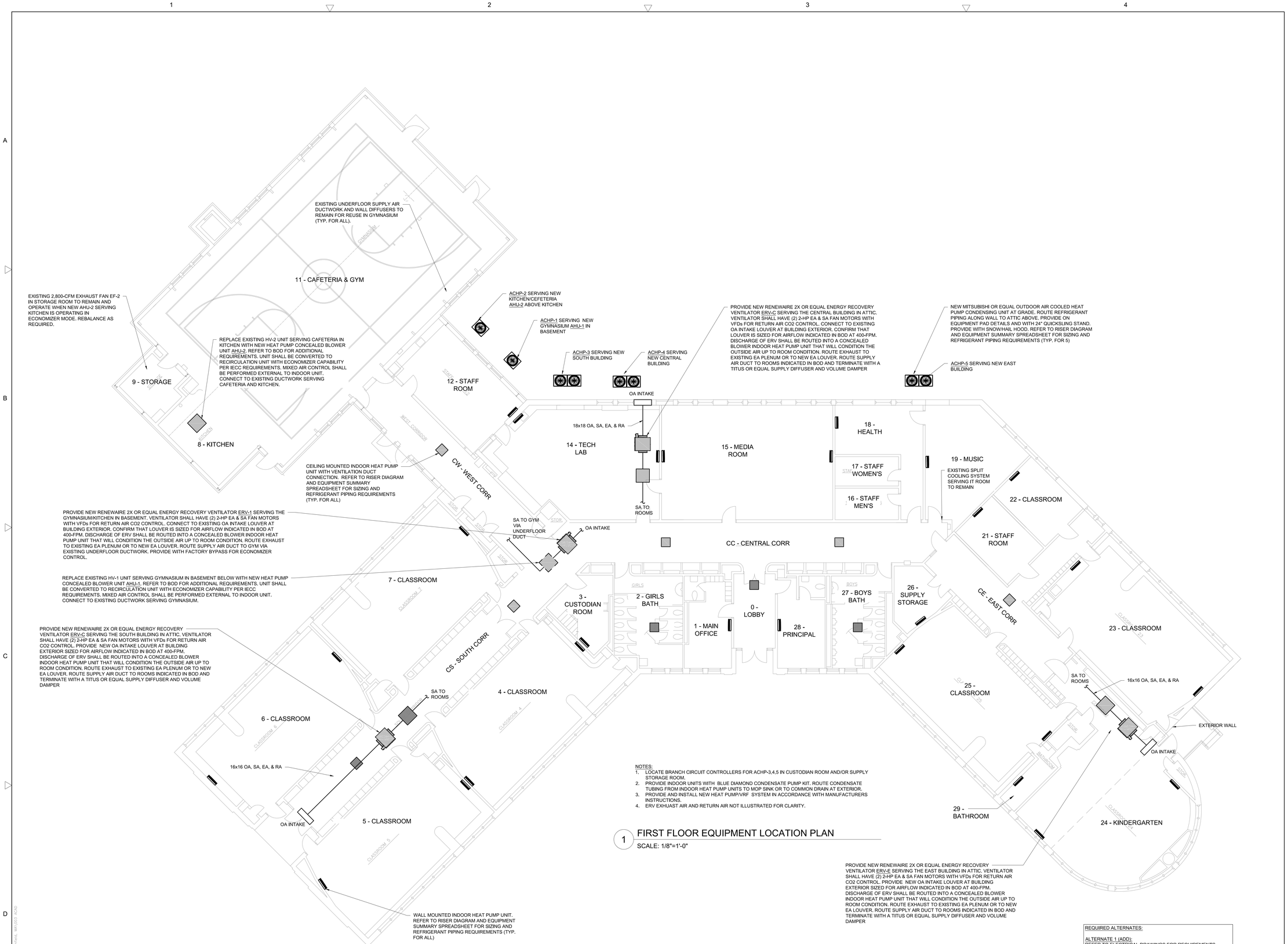

NOTES:
1. LOCATE BRANCH CIRCUIT CONTROLLERS FOR ACHP-3,4,5 IN CUSTODIAN ROOM AND/OR SUPPLY STORAGE ROOM.
2. PROVIDE INDOOR UNITS WITH BLUE DIAMOND CONDENSATE PUMP KIT. ROUTE CONDENSATE TUBING FROM INDOOR HEAT PUMP UNITS TO MOP SINK OR TO COMMON DRAIN AT EXTERIOR.
3. PROVIDE AND INSTALL NEW HEAT PUMP/VRF SYSTEM IN ACCORDANCE WITH MANUFACTURERS INSTRUCTIONS.
4. ERV EXHUAST AIR AND RETURN AIR NOT ILLUSTRATED FOR CLARITY.

1 FIRST FLOOR EQUIPMENT LOCATION PLAN

SCALE: 1/8"=1'-0"

REQUIRED ALTERNATES:

ALTERNATE 1 (ADD):
REFER TO ELECTRICAL DRAWINGS FOR REQUIREMENTS.

ALTERNATE 2 (DEDUCT):
NEW HEAT PUMP SYSTEMS (ACHP-1 AND ACHP-2) SERVING THE GYMNASIUM AND CAFETERIA, RESPECTIVELY, SHALL BE DELETED. HEAT PUMP AHUS 1&2 SHALL BE REPLACED WITH A PACKAGED AIR HANDLING UNIT WITH AN INDIRECT FIRED NATURAL GAS BURNER. AHU-1 SHALL BE SIZED FOR 111-MBH AND AHU-2 SHALL BE SIZED FOR 82-MBH. THE ECONOMIZER REQUIREMENT PER IECC 2015 CAN BE DELETED BECAUSE THESE UNITS WILL BE HEATING ONLY. CONTRACTOR SHALL ROUTE NATURAL GAS PIPING TO EACH AHU AND PROVIDE A GAS TRAIN AT EACH UNIT. REFER TO ELECTRICAL DRAWINGS AND SPECIFICATIONS FOR ADDITIONAL REQUIREMENTS.

MECHANICAL CONSULTANTS

B2Q Associates, Inc.
100 Burtt Road, Suite 212
Andover, MA 01870
P. (978) 208-0609
www.b2qassociates.com

This drawing is not intended, nor shall be used for construction unless the signed seal of a design professional is affixed.

KEY PLAN

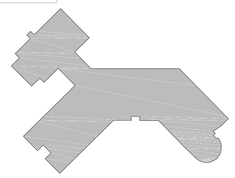

REV.	DATE	DESCRIPTION
A	06/08/2018	BOD TO SUPPORT DESIGN/BUILD RFP

CUSTOMER

TOWN OF GREENFIELD
14 COURT SQUARE
GREENFIELD, MASSACHUSETTS 01301

PROJECT

GREEN RIVER SCHOOL HVAC UPGRADES

TITLE

MECHANICAL EQUIPMENT LOCATION PLAN

DRWN BY: JSB	DATE: 06/08/2018
CHKD BY: MAM	DATE: 06/08/2018
SCALE: NONE	SHEET SIZE: E1

M-100

SHEET 05 OF 07

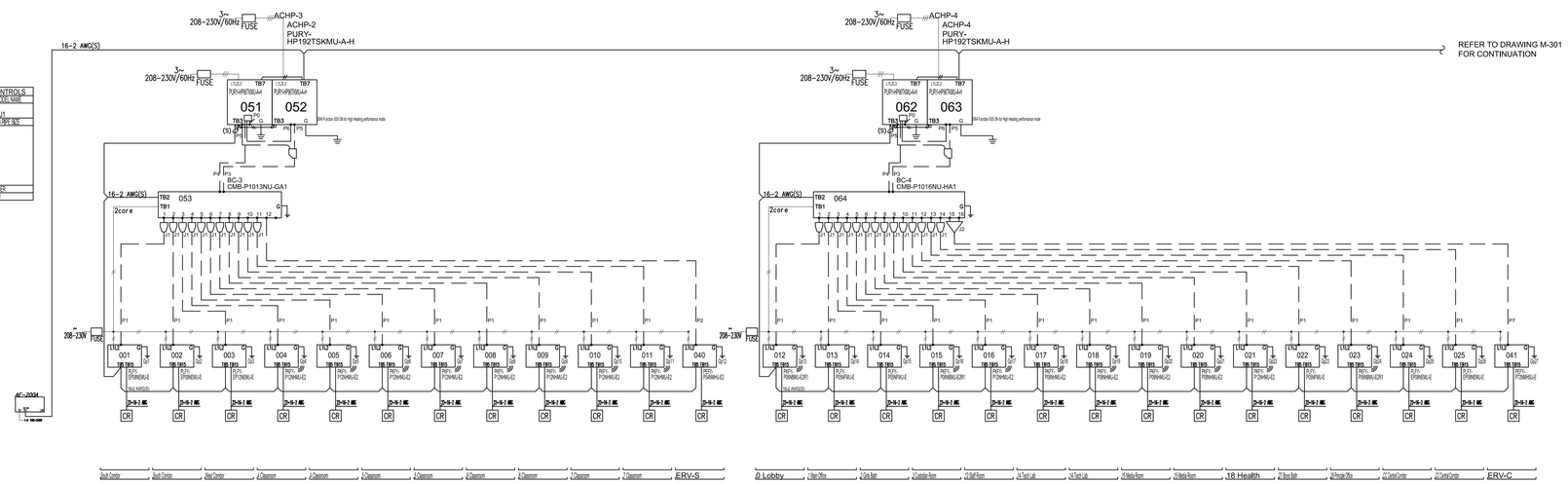

PIPING AND CONTROLS	
SYMBOL	BRANCH PIPE MODEL NAME
J1	Reducer
J2	CMY-R160-J1
J3	CMY-Y200S-G2
SYMBOL	LOCATION PIPE SIZE
P1	34 / 12
P2	38 / 38
P3	78 /
P4	/ 1-5/8
P5	34 /
P6	/78
P7	38 / 34
P8	58 / 1-5/8
P9	38 / 78
P10	12 /
P11	/78
SYMBOL	JOINT NUMBER
CR	PAC-IR34MSJ-E

DIAGRAM SYMBOL LEGEND	
DISPLAY	DESCRIPTION
	POWER WIRE
	CONTROL WIRE
	REF. PIPE

Additional refrigerant charge is needed depending on the size and length of extended piping. Please refer the amount of pre-charge and the formula of calculation which is mentioned on the data book.
1.25mm(16 AWG) : 1.25mm(16 AWG) or more. 0.75mm(20 AWG) : between 0.5mm(24 AWG) and 0.75mm(20 AWG).

PIPING AND CONTROLS	
SYMBOL	BRANCH PIPE MODEL NAME
J1	Reducer
J2	CMY-R160-J1
J3	CMY-Y200S-G2
SYMBOL	LOCATION PIPE SIZE
P1	34 / 12
P2	38 / 38
P3	78 /
P4	/ 1-5/8
P5	34 /
P6	/78
P7	38 / 34
P8	58 / 1-5/8
P9	38 / 78
P10	12 /
P11	/78
SYMBOL	JOINT NUMBER
CR	PAC-IR34MSJ-E

1 MITSUBISHI CITY-MULTI SYSTEM SCHEMATIC PART 1

SCALE: 1/8"=1'-0"

MECHANICAL CONSULTANTS

B2Q Associates, Inc.
100 Burtt Road, Suite 212
Andover, MA 01870
P: (978) 208-0609
www.b2qassociates.com

This drawing is not intended, nor shall be used for construction unless the signed seal of a design professional is affixed.

KEY PLAN

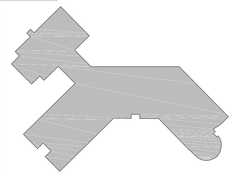

REV.	DATE	DESCRIPTION
A	06/08/2018	BOD TO SUPPORT DESIGN/BUILD RFP

CUSTOMER

TOWN OF GREENFIELD

14 COURT SQUARE
GREENFIELD, MASSACHUSETTS 01301

PROJECT

GREEN RIVER SCHOOL HVAC UPGRADES

TITLE

VRF & HEAT PUMP SYSTEM SCHEMATIC PART 1

DRWN BY: JSB	DATE: 06/08/2018
CHKD BY: MAM	DATE: 06/08/2018
SCALE: NONE	SHEET SIZE: E1

M-300

SHEET 06 OF 07

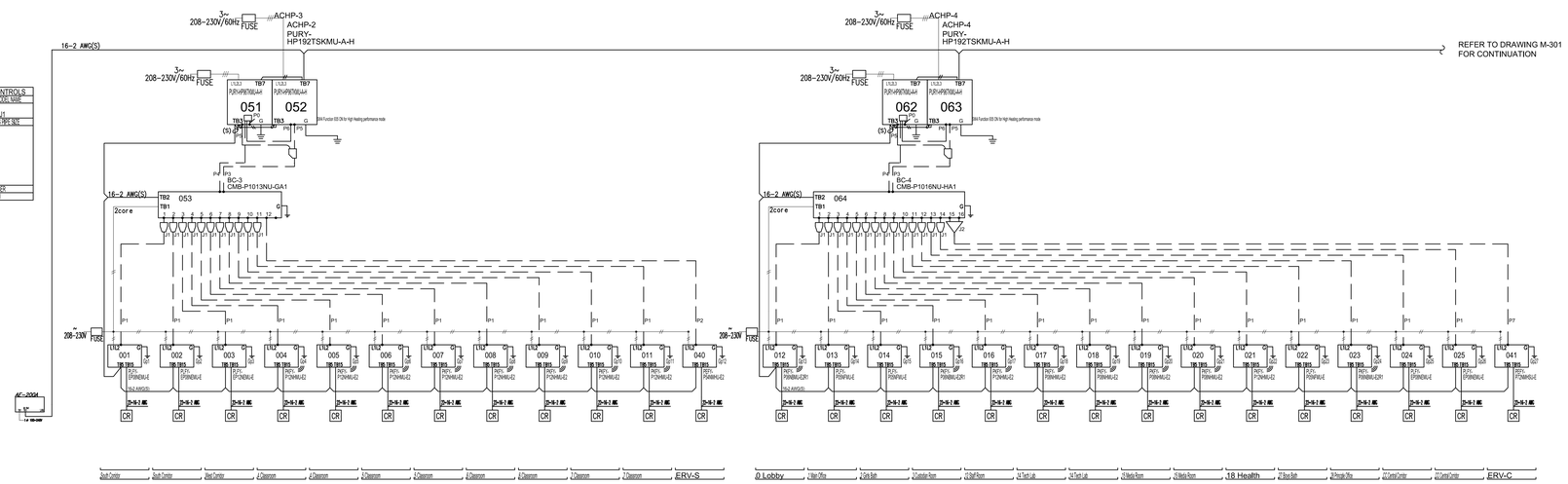

PIPING AND CONTROLS	
SYMBOL	BRANCH PIPE MODEL NAME
J1	Reducer
J2	CMY-R160-J1
J3	CMY-Y200S-G2
SYMBOL	LOCATION	PIPE SIZE
P1	34 / 12
P2	38 / 38
P3	78 /
P4	/1-5/8
P5	34 /
P6	/7/8
P7	38 / 34
P8	58 / 1-5/8
P9	38 / 7/8
P10	12 /
P11	/7/8
SYMBOL	JOINT NUMBER
CR	PAC-KH150JA2

DIAGRAM SYMBOL LEGEND	
DISPLAY	DESCRIPTION
	POWER WIRE
	CONTROL WIRE
	REF. PIPE

Additional refrigerant charge is needed depending on the size and length of extended piping. Please refer the amount of pre-charge and the formula of calculation which is mentioned on the data book.
1.25mm(16 AWG) : 1.25mm(16 AWG) or more. 0.75mm(20 AWG) : between 0.5mm(24 AWG) and 0.75mm(20 AWG).

1 MITSUBISHI CITY-MULTI SYSTEM SCHEMATIC PART 1

SCALE: 1/8"=1'-0"

MECHANICAL CONSULTANTS

B2Q Associates, Inc.
100 Burtt Road, Suite 212
Andover, MA 01870
P: (978) 208-0609
www.b2qassociates.com

This drawing is not intended, nor shall be used for construction unless the signed seal of a design professional is affixed.

KEY PLAN

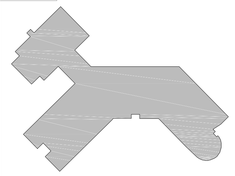

REV.	DATE	DESCRIPTION
A	06/08/2018	BOD TO SUPPORT DESIGN/BUILD RFP

CUSTOMER

TOWN OF GREENFIELD

14 COURT SQUARE
GREENFIELD, MASSACHUSETTS 01301

PROJECT

GREEN RIVER SCHOOL HVAC UPGRADES

TITLE

VRF & HEAT PUMP SYSTEM SCHEMATIC PART 2

DRWN BY: JSB	DATE: 06/08/2018
CHKD BY: MAM	DATE: 06/08/2018
SCALE: NONE	SHEET SIZE: E1

M-301

SHEET 07 OF 07

ABBREVIATIONS

A	AMPERE
AC	ALTERNATING CURRENT
AF	ARC–FAULT CIRCUIT INTERRUPTER
AFF	ABOVE FINISHED FLOOR
AL	ALUMINIUM
ARCH	ARCHITECT
ATS	AUTOMATIC TRANSFER SWITCH
C	CONDUIT
CB	CIRCUIT BREAKER
CT	CURRENT TRANSFORMER
CU	COPPER
DISC	DISCONNECT SWITCH
DWG	DRAWING
E	ELECTRIC
EC	ELECTRICAL CONTRACTOR
EMT	ELECTRICAL METAL TUBING
EX	EXISTING DEVICE TO REMAIN
EWC	ELECTRIC WATER COOLER
FA	FIRE ALARM
FACP	MAIN FIRE ALARM CONTROL PANEL
G	GROUND
GC	GENERAL CONTRACTOR
GFI	GROUND FAULT INTERRUPTOR
GRC	GALVANIZED RIGID CONDUIT
JB	JUNCTION BOX
MC	MECHANICAL CONTRACTOR
MCB	MAIN CIRCUIT BREAKER
MI	MINERAL INSULATED CABLE
MLO	MAIN LUGS ONLY
MT	MOUNT
NEC	NATIONAL ELECTRICAL CODE
NF	NON FUSED
NIC	NOT IN CONTRACT
NL	NEW LOCATION OF EXISTING, REMOVED AND REINSTALLED DEVICE WITH EXTENDED BRANCH CIRCUIT WIRING
NTS	NOT TO SCALE
P	POLE
PC	PLUMBING CONTRACTOR
PH	PHASE
PVC	POLYVINYL CHLORIDE
RE	REMOVE EXISTING DEVICE & ALL ASSOCIATED CONDUIT & WIRING BACK TO NEXT ACTIVE DEVICE
RECP	RECEPTACLE
RR	EXISTING DEVICE TO BE REMOVED & REINSTALLED IN NEW LOCATION, EXTEND BRANCH CIRCUIT WIRING TO NEW LOCATION AS SHOWN
SP	SPARE
T	TELEPHONE
TYP	TYPICAL
UON	UNLESS OTHERWISE NOTED
VFD	VARIABLE FREQUENCY DEVICE
W	WIRE
WP	WEATHERPROOF

MECHANICAL EQUIPMENT TAGS

AHU	AIR HANDLING UNIT
B	BOILER
EF	EXHAUST FAN
ERV	ENERGY RECOVERY UNIT
HP	HEAT PUMP
VRF	VARIABLE REFRIGERANT FLOW

POWER LEGEND

	120/208 VOLT PANEL
	BRANCH CIRCUIT OR FEEDER CONCEALED IN CONSTRUCTION FINISHED AREAS, EXPOSED IN UNFINISHED AREAS
—UE—	UNDERGROUND ELECTRIC
—OE—	OVERHEAD ELECTRIC
HP1–3	1P HOMERUN TO PANEL HP1, CIRCUIT 3 (2–#12&1–#12G–1/2"C, UON)
HP1–3,5	2P HOMERUN TO PANEL HP1, CIRCUIT 3 & 5 (2–#12&1–#12G–1/2"C, UON)
HP1–1,3,5	3P HOMERUN TO PANEL HP1, CKT 1, 3, & 5 (3–#12&1–#12G–1/2"C, UON)
J	JUNCTION BOX
100/70	DISCONNECT SWITCH, 100A DISCONNECT WITH 70A FUSE
100/NF	DISCONNECT SWITCH, 100A, NON FUSED
M	MOTOR AS NOTED
	GROUND
M	UTILITY COMPANY KW–HR/DEMAND METER
	DUPLEX RECEPTACLE WITH GROUND FAULT INTERRUPTER
T	PAD MOUNTED TRANSFORMER
M	MOTOR WITH ADJACENT SINGLE POLE TOGGLE TYPE DISCONNECT SWITCH
	TRANSFORMER WINDING
	CIRCUIT BREAKER
	UTILITY POLE
SD RTS	DUCT SMOKE DETECTOR WITH REMOTE TEST STATION

LINETYPE LEGEND:

NEW:

EXISTING:

EXISTING TO REMOVE:

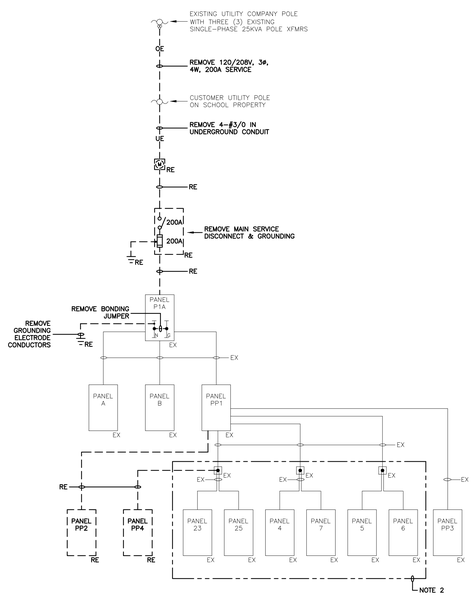

ONE–LINE DIAGRAM – DEMOLITION
SCALE: NTS

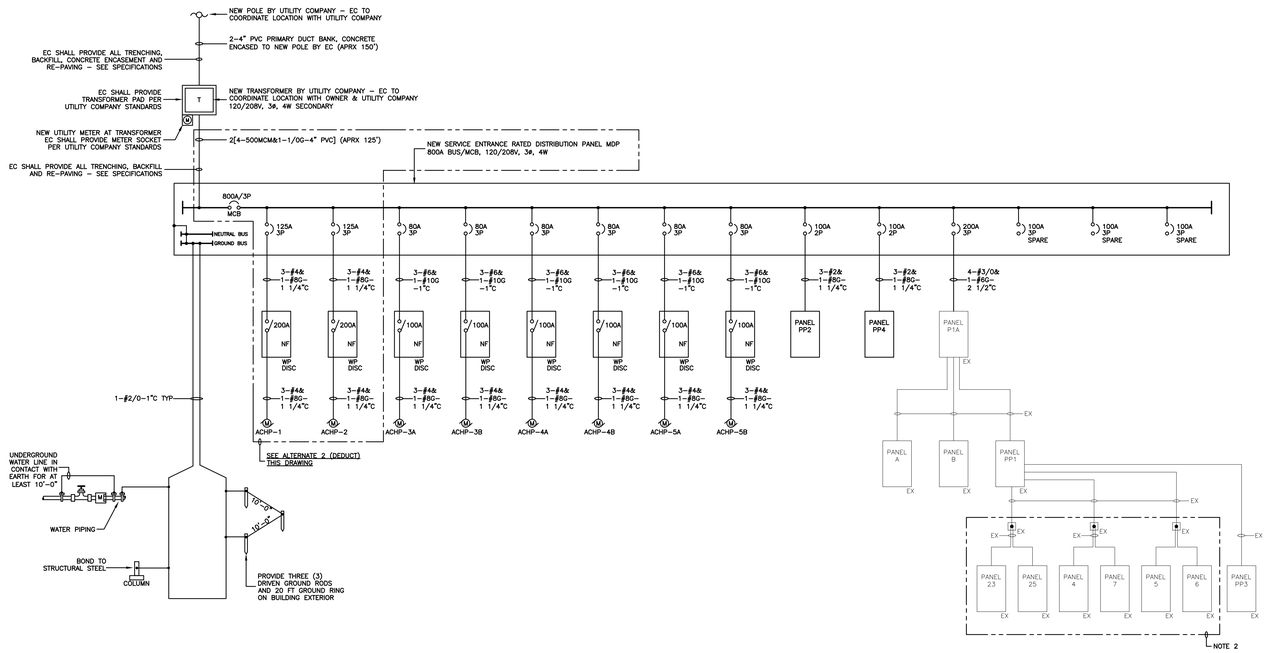

ONE–LINE DIAGRAM – NEW WORK
SCALE: NTS

ONE–LINE DIAGRAMS NOTES:

1. EXCEPT FOR MAIN SERVICE CONDUITS, ALL CONDUITS SHOWN ON THIS ONE–LINE DIAGRAM SHALL BE TYPE EMT, UNLESS OTHERWISE NOTED, TYPICAL.

2. UNDER BASE BID, EXISTING 4 CIRCUIT CLASSROOM PANELS 4, 5, 6, 7, 23 & 25 TO REMAIN. EC SHALL ALSO PROVIDE ADD ALTERNATE 1 PRICING TO REMOVE 4 CIRCUIT CLASSROOM PANELS AND SPLICE AND EXTEND BRANCH CIRCUIT WIRING TO NEW PANELS PP2 AND PP4 REFER TO ADD ALTERNATE 1 NOTE ON THIS DRAWING.

ALTERNATE 1 (ADD):

ELECTRICAL CONTRACTOR SHALL PROVIDE ADD ALTERNATE PRICING TO CONVERT SIX (6), 4 CIRCUIT CLASSROOM PANELS TO SPLICE BOXES, SPLICE AND EXTEND BRACH CIRCUIT WIRING FROM EACH CLASSROOM PANEL TO RESPECTIVE CORRIDOR PANEL (NEW PANEL PP2 OR NEW PANEL PP4) AND REMOVE CLASSROOM PANEL FEEDERS BACK TO PANEL PP1.

ALTERNATE 2 (DEDUCT):

ELECTRICAL CONTRACTOR SHALL PROVIDE DEDUCT ALTERNATE PRICING TO DEDUCT ELECTRICAL CIRCUIT BREAKERS, CONDUIT, WIRING AND DISCONNECTS FOR OUTSIDE HVAC UNITS ACHP–1 AND ACHP–2, DOWNSIZE PANEL MDP TO 600A, AND DOWNSIZE THE MAIN SERVICE FEEDERS TO 2[4–350MCM&1–#10–3"C]. EC SHALL ALSO INCLUDE IN ALTERNATE 2 PRICE FOR ELECTRICAL CONNECTIONS TO ONE (1) GAS FIRED AHU, REFER TO MECHANICAL DRAWINGS AND NARRATIVE.

NOT FOR PERMIT OR CONSTRUCTION. DOCUMENTS ONLY SUPPORT THE DESIGN BUILD RFP PROCUREMENT PROCESS

JE-3203

ELECTRICAL CONSULTANTS

JEDI

JOHNSON ENGINEERING AND DESIGN, INC.
5 ELM STREET, SUITE 14
DANVERS, MA 01923
TEL: 978–646–9001
FAX: 978–646–9002
www.johnsonengineering.biz

This drawing is not intended, nor shall be used for construction unless the signed seal of a design professional is affixed.

KEY PLAN

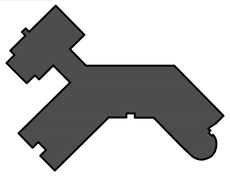

REV.	DATE	DESCRIPTION
A	06/08/2018	BOD TO SUPPORT DESIGN/BUILD RFP

CUSTOMER

TOWN OF GREENFIELD
14 COURT SQUARE
GREENFIELD, MASSACHUSETTS 01301

PROJECT

GREEN RIVER SCHOOL HVAC UPGRADES

TITLE

ELECTRICAL LEGEND & ONE-LINE DIAGRAMS

DRWN BY: MVG	DATE: 06/08/2018
CHKD BY: EJ	DATE: 06/08/2018
SCALE: AS NOTED	SHEET SIZE: E1

E-001

SHEET 01 OF 02

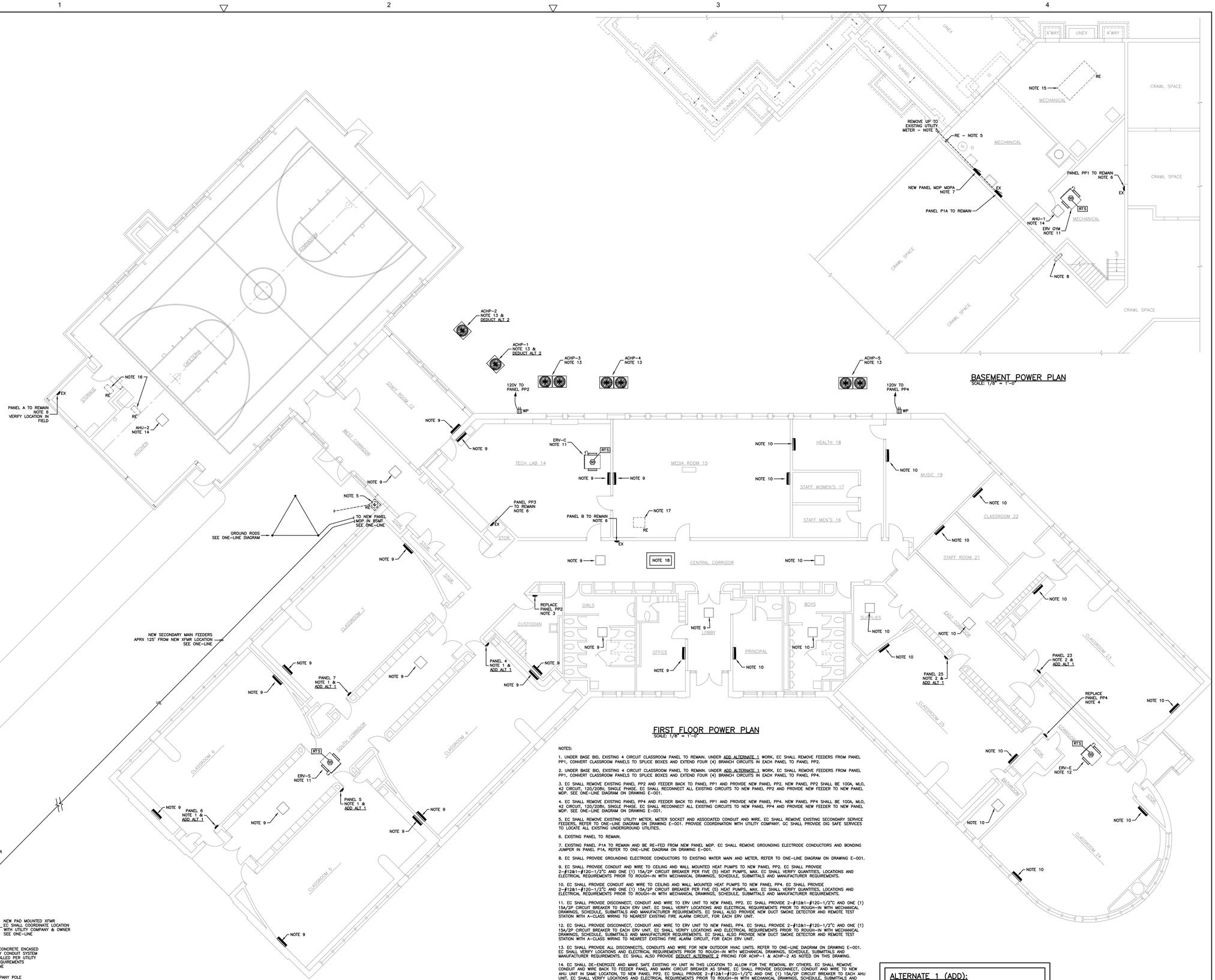

BASEMENT POWER PLAN

SCALE: 1/8" = 1'-0"

FIRST FLOOR POWER PLAN

SCALE: 1/8" = 1'-0"

NOTES:

1. UNDER BASE BID, EXISTING 4 CIRCUIT CLASSROOM PANEL TO REMAIN. UNDER ADD ALTERNATE 1 WORK, EC SHALL REMOVE FEEDERS FROM PANEL PP1, CONVERT CLASSROOM PANELS TO SPLICE BOXES AND EXTEND FOUR (4) BRANCH CIRCUITS IN EACH PANEL TO PANEL PP2.

2. UNDER BASE BID, EXISTING 4 CIRCUIT CLASSROOM PANEL TO REMAIN. UNDER ADD ALTERNATE 1 WORK, EC SHALL REMOVE FEEDERS FROM PANEL PP1, CONVERT CLASSROOM PANELS TO SPLICE BOXES AND EXTEND FOUR (4) BRANCH CIRCUITS IN EACH PANEL TO PANEL PP4.

3. EC SHALL REMOVE EXISTING PANEL PP2 AND FEEDER BACK TO PANEL PP1 AND PROVIDE NEW PANEL PP2. NEW PANEL PP2 SHALL BE 100A, MLO, 42 CIRCUIT, 120/208V, SINGLE PHASE. EC SHALL RECONNECT ALL EXISTING CIRCUITS TO NEW PANEL PP2 AND PROVIDE NEW FEEDER TO NEW PANEL MDP. SEE ONE-LINE DIAGRAM ON DRAWING E-001.

4. EC SHALL REMOVE EXISTING PANEL PP4 AND FEEDER BACK TO PANEL PP1 AND PROVIDE NEW PANEL PP4. NEW PANEL PP4 SHALL BE 100A, MLO, 42 CIRCUIT, 120/208V, SINGLE PHASE. EC SHALL RECONNECT ALL EXISTING CIRCUITS TO NEW PANEL PP4 AND PROVIDE NEW FEEDER TO NEW PANEL MDP. SEE ONE-LINE DIAGRAM ON DRAWING E-001.

5. EC SHALL REMOVE EXISTING UTILITY METER, METER SOCKET AND ASSOCIATED CONDUIT AND WIRE. EC SHALL REMOVE EXISTING SECONDARY SERVICE FEEDERS, REFER TO ONE-LINE DIAGRAM ON DRAWING E-001. PROVIDE COORDINATION WITH UTILITY COMPANY. GC SHALL PROVIDE DIG SAFE SERVICES TO LOCATE ALL EXISTING UNDERGROUND UTILITIES.

6. EXISTING PANEL TO REMAIN.

7. EXISTING PANEL P1A TO REMAIN AND BE RE-FED FROM NEW PANEL MDP. EC SHALL REMOVE GROUNDING ELECTRODE CONDUCTORS AND BONDING JUMPER IN PANEL P1A, REFER TO ONE-LINE DIAGRAM ON DRAWING E-001.

8. EC SHALL PROVIDE GROUNDING ELECTRODE CONDUCTORS TO EXISTING WATER MAIN AND METER, REFER TO ONE-LINE DIAGRAM ON DRAWING E-001.

9. EC SHALL PROVIDE CONDUIT AND WIRE TO CEILING AND WALL MOUNTED HEAT PUMPS TO NEW PANEL PP2. EC SHALL PROVIDE 2-#12&1-#12G-1/2"C AND ONE (1) 15A/2P CIRCUIT BREAKER PER FIVE (5) HEAT PUMPS, MAX. EC SHALL VERIFY QUANTITIES, LOCATIONS AND ELECTRICAL REQUIREMENTS PRIOR TO ROUGH-IN WITH MECHANICAL DRAWINGS, SCHEDULE, SUBMITTALS AND MANUFACTURER REQUIREMENTS.

10. EC SHALL PROVIDE CONDUIT AND WIRE TO CEILING AND WALL MOUNTED HEAT PUMPS TO NEW PANEL PP4. EC SHALL PROVIDE 2-#12&1-#12G-1/2"C AND ONE (1) 15A/2P CIRCUIT BREAKER PER FIVE (5) HEAT PUMPS, MAX. EC SHALL VERIFY QUANTITIES, LOCATIONS AND ELECTRICAL REQUIREMENTS PRIOR TO ROUGH-IN WITH MECHANICAL DRAWINGS, SCHEDULE, SUBMITTALS AND MANUFACTURER REQUIREMENTS.

11. EC SHALL PROVIDE DISCONNECT, CONDUIT AND WIRE TO ERV UNIT TO NEW PANEL PP2. EC SHALL PROVIDE 2-#12&1-#12G-1/2"C AND ONE (1) 15A/2P CIRCUIT BREAKER TO EACH ERV UNIT. EC SHALL VERIFY LOCATIONS AND ELECTRICAL REQUIREMENTS PRIOR TO ROUGH-IN WITH MECHANICAL DRAWINGS, SCHEDULE, SUBMITTALS AND MANUFACTURER REQUIREMENTS. EC SHALL ALSO PROVIDE NEW DUCT SMOKE DETECTOR AND REMOTE TEST STATION WITH A-CLASS WIRING TO NEAREST EXISTING FIRE ALARM CIRCUIT, FOR EACH ERV UNIT.

12. EC SHALL PROVIDE DISCONNECT, CONDUIT AND WIRE TO ERV UNIT TO NEW PANEL PP4. EC SHALL PROVIDE 2-#12&1-#12G-1/2"C AND ONE (1) 15A/2P CIRCUIT BREAKER TO EACH ERV UNIT. EC SHALL VERIFY LOCATIONS AND ELECTRICAL REQUIREMENTS PRIOR TO ROUGH-IN WITH MECHANICAL DRAWINGS, SCHEDULE, SUBMITTALS AND MANUFACTURER REQUIREMENTS. EC SHALL ALSO PROVIDE NEW DUCT SMOKE DETECTOR AND REMOTE TEST STATION WITH A-CLASS WIRING TO NEAREST EXISTING FIRE ALARM CIRCUIT, FOR EACH ERV UNIT.

13. EC SHALL PROVIDE ALL DISCONNECTS, CONDUITS AND WIRE FOR NEW OUTDOOR HVAC UNITS. REFER TO ONE-LINE DIAGRAM ON DRAWING E-001. EC SHALL VERIFY LOCATIONS AND ELECTRICAL REQUIREMENTS PRIOR TO ROUGH-IN WITH MECHANICAL DRAWINGS, SCHEDULE, SUBMITTALS AND MANUFACTURER REQUIREMENTS. EC SHALL ALSO PROVIDE DEDUCT ALTERNATE 2 PRICING FOR ACHP-1 & ACHP-2 AS NOTED ON THIS DRAWING.

14. EC SHALL DE-ENERGIZE AND MAKE SAFE EXISTING HV UNIT IN THIS LOCATION TO ALLOW FOR THE REMOVAL BY OTHERS. EC SHALL REMOVE CONDUIT AND WIRE BACK TO FEEDER PANEL AND MARK CIRCUIT BREAKER AS SPARE. EC SHALL PROVIDE DISCONNECT, CONDUIT AND WIRE TO NEW AHU UNIT IN SAME LOCATION, TO NEW PANEL PP2. EC SHALL PROVIDE 2-#12&1-#12G-1/2"C AND ONE (1) 15A/2P CIRCUIT BREAKER TO EACH AHU UNIT. EC SHALL VERIFY LOCATIONS AND ELECTRICAL REQUIREMENTS PRIOR TO ROUGH-IN WITH MECHANICAL DRAWINGS, SCHEDULE, SUBMITTALS AND MANUFACTURER REQUIREMENTS.

15. AT THE END OF THE PROJECT, EC SHALL DE-ENERGIZE AND MAKE SAFE EXISTING BOILER PLANT ELECTRICAL CONNECTIONS TO BE ABANDONED IN PLACE. EC SHALL REMOVE FEEDERS BACK TO PANEL AND MARK CIRCUIT BREAKER AS SPARE. EXISTING CONDUIT TO BE ABANDONED IN PLACE.

16. EC SHALL DE-ENERGIZE AND MAKE SAFE EXISTING HV-5 AND HV-6 UNITS ELECTRICAL CONNECTIONS TO ALLOW FOR THE REMOVAL BY OTHERS. EC SHALL REMOVE CONDUIT AND WIRE BACK TO FEEDER PANEL AND MARK CIRCUIT BREAKER AS SPARE.

17. EC SHALL DE-ENERGIZE AND MAKE SAFE EXISTING HV-3 UNIT ELECTRICAL CONNECTIONS TO BE ABANDONED IN PLACE. EC SHALL REMOVE FEEDERS BACK TO PANEL AND MARK CIRCUIT BREAKER AS SPARE. EXISTING CONDUIT TO BE ABANDONED IN PLACE.

18. EXISTING EXHAUST FANS EF-2 (STORAGE), EF-2 (KITCHEN) AND EF-BATHROOMS (LOCATION TBD), ARE EXISTING TO REMAIN. ALL OTHER EXHAUST FANS ARE TO BE REMOVED AND EC SHALL DE-ENERGIZE AND MAKE SAFE EXISTING EF UNITS ELECTRICAL CONNECTIONS TO ALLOW FOR THE REMOVAL BY OTHERS. EC SHALL REMOVE CONDUIT AND WIRE BACK TO FEEDER PANEL AND MARK CIRCUIT BREAKER AS SPARE. EC SHALL VERIFY EF UNITS TO BE REMOVED WITH MC AND DRAWING MD-100.

ALTERNATE 1 (ADD):

ELECTRICAL CONTRACTOR SHALL PROVIDE ADD ALTERNATE PRICING TO CONVERT SIX (6), 4 CIRCUIT CLASSROOM PANELS TO SPLICE BOXES, SPLICE AND EXTEND BRACH CIRCUIT WIRING FROM EACH CLASSROOM PANEL TO RESPECTIVE CORRIDOR PANEL (NEW PANEL PP2 OR NEW PANEL PP4) AND REMOVE CLASSROOM PANEL FEEDERS BACK TO PANEL PP1.

ALTERNATE 2 (DEDUCT):

ELECTRICAL CONTRACTOR SHALL PROVIDE DEDUCT ALTERNATE PRICING TO DEDUCT ELECTRICAL CIRCUIT BREAKERS, CONDUIT, WIRING AND DISCONNECTS FOR OUTSIDE HVAC UNITS ACHP-1 AND ACHP-2, DOWNSIZE PANEL MDP TO 800A, AND DOWNSIZE THE MAIN SERVICE FEEDERS TO 2(4-350MCMAl-#1G-3"C). EC SHALL ALSO INCLUDE IN ALTERNATE 2 PRICE FOR ELECTRICAL CONNECTIONS TO ONE (1) GAS FIRED AHU, REFER TO MECHANICAL DRAWINGS AND NARRATIVE.

NOT FOR PERMIT OR CONSTRUCTION. DOCUMENTS ONLY SUPPORT THE DESIGN BUILD RFP PROCUREMENT PROCESS

JE-3203

ELECTRICAL CONSULTANTS

JEDI

JOHNSON ENGINEERING AND DESIGN, INC.®
5 ELM STREET, SUITE 14
DANVERS, MA 01923
TEL: 978-646-9001
FAX: 978-646-9002
www.johnsonengineering.biz

This drawing is not intended, nor shall be used for construction unless the signed seal of a design professional is affixed.

KEY PLAN

REV.	DATE	DESCRIPTION
A	06/08/2018	BOD TO SUPPORT DESIGN/BUILD RFP

CUSTOMER

TOWN OF GREENFIELD
14 COURT SQUARE
GREENFIELD, MASSACHUSETTS 01301

PROJECT

GREEN RIVER SCHOOL HVAC UPGRADES

TITLE

POWER PLANS

DRWN BY: MVG	DATE: 06/08/2018
CHKD BY: EJ	DATE: 06/08/2018
SCALE: AS NOTED	SHEET SIZE: E1

E-100

SHEET 02 OF 02