THE COMMONWEALTH OF MASSACHUSETTS
William Francis Galvin, Secretary of the Commonwealth

REGULATION FILING AND PUBLICATION

1. Regulation Chapter, Number & Heading: **521 CMR**

2. Name of Agency: **ARCHITECTURAL ACCESS BOARD**

3. This document is reprinted from the Code of Massachusetts Regulations and contains the following:

521 CMR PART	A	ADMINISTRATION
PART	B	BUILDING TYPES
PART	C	EXTERIOR
PART	D	INTERIOR
PART	E	DWELLING UNITS

Under the Provisions of Massachusetts General Laws, Chapter 30A, § 6, and Chapter 233, § 75, this document may be used as evidence of the original documents on file with the Secretary of the Commonwealth

Compiled as in full force and effect: 1/27/2006

521 CMR 1-47
521CR1.00-47.00
100205 $13.15

A true copy attest:
William Francis Galvin
WILLIAM FRANCIS GALVIN
Secretary of the Commonwealth

521 CMR 1.00: **AUTHORITY**

1.1 521 CMR is promulgated by the Architectural Access Board pursuant to authority granted by M.G.L. c. 22, § 13A.

1.2 Under the provisions of St. 1974, c. 528, § 2, all orders, rules and regulations duly granted by the Board to Facilitate The Use Of Public Buildings By The Physically Handicapped, which were in force immediately prior to the effective date of St. 1974, c. 528, § 2 shall continue to be in force, and the provisions thereof to be enforced until superseded, revised, rescinded or canceled in accordance with the law by the Architectural Access Board.

1.3 521 CMR supersedes and revises the Rules and Regulations of the Architectural Access Board, designated as 521 CMR 1.00 *et seq*.

Enabling Legislation	Effective Date of Regulations
St. 1974, c. 528	June 10, 1975
	Complete revision: March 3, 1977 *Complete revision*: April 1, 1982 *Complete revision*: September 1, 1996
St. 1986, c. 642	*Amendments to Sections 5, 10, 11 and 23*: July 10, 1987 *Amendments to Sections 2, 3, 7, 8, 9, 10, 11, 12, 14, 15, 19, 21, 23 24, 26, 27, 28, 30, 31, 32, 37, 40, 41, 42, 44, and 45*: March 6, 1998 *Amendments to Sections 5, 8, 9, 14, 18, 21, 26, 27, 28, 30, 31, 37, 39, 40, 42*: February 1, 2002
St. 1989, c. 722	(Housing Bill of Rights)
N/A	*Amendments to Section 18*: September 28, 1990
Emergency Regulations	*Amendments to Sections 30.5.2 and 35.9*: January 1, 1992

1.3.1 521 CMR will become effective on July 27, 2006. In the interim, one has the option of complying with either the previous regulations in their entirety or these regulations in its entirety, not a combination of both. The decision of which regulations will be followed must be made before applying for a building permit.

NON-TEXT PAGE

521 CMR 2.00: **PURPOSE AND SCOPE**

2.1 PURPOSE

521 CMR is designed to make *public buildings* and facilities *accessible* to, functional for, and safe for use by *persons with disabilities*.

2.2 INTENT

It is the intent of 521 CMR to provide *persons with disabilities* full, free and safe use of all *buildings* and facilities so that all such persons may have the educational, living and recreational opportunities necessary to be as self-sufficient as possible and to assume full responsibilities as citizens.

2.3 VIOLATIONS

521 CMR is deemed to be a specialized code as referred to in M.G.L. c. 143, § 96, the violation of which shall constitute gross negligence for the purpose of M.G.L. c. 112, § 60G, clause (d), and shall be subject to the additional powers granted to the *Board* by M.G.L. c. 22, § 13A.

2.3.1 The *Board* shall receive complaints of non-compliance with any rule or regulation from any person or may receive complaints initiated by its own staff. If the *Board* finds, after notice and opportunity for a hearing, that any person is not in compliance with any rule or regulation, it may issue an order to compel such compliance. Such order may specify the date and the manner by which such person shall cure the noncompliance found by the Board and may require that pending the cure of such noncompliance a performance bond be furnished, payable to the Commonwealth, in such penal sum as the *Board* finds reasonable.

2.3.2 In the event that a person fails to cure such noncompliance by the date specified in the *Board's* order, the *Board* shall be empowered, <u>after further hearing</u>, to impose a fine payable to the Commonwealth not to exceed $1,000 per day per violation for each day of noncompliance that the *Board* finds was without justification.

2.3.3 The *Board* shall also have the power, if it determines that such failure to cure noncompliance is without justification, to bring a complaint before any appropriate licensing or permit granting authority against the license or permit of such person.

2.3.4 The *Board* shall have the authority to issue subpoenas.

2.4 GENERAL CONVENTIONS

The following conventions apply when using 521 CMR:

2.4.1 Graphic and other illustrations are provided in 521 CMR to illustrate a solution only. They are not to be taken as the best solution or the only solution, but are provided to clarify the intent of the written regulations. The written word always prevails.

2.00: PURPOSE AND SCOPE

2.4.2 Graphic conventions are shown in **Figure 2a**. Dimensions that are not marked minimum or maximum shall comply with **521 CMR 2.4.4**, unless otherwise noted in the text or captions.

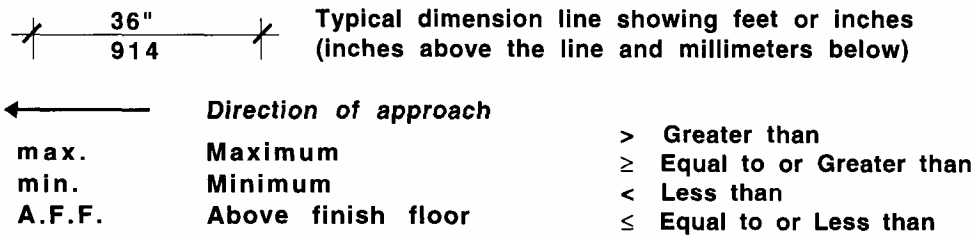

Graphic Conventions
Fig. 2a

2.4.3 Words italicized in the text indicate that a definition of that word is provided in **521 CMR 5.00: DEFINITIONS**.

2.4.4 Tolerances on all dimensions, unless otherwise noted, shall not exceed the following:

a. Dimensions between zero and two inches, (0" and 2" = 0mm and 51mm) inclusive, shall have a maximum tolerance of plus or minus one-eighth inch (1/8" = 3mm).
b. Dimensions more than two inches and less than 36 inches (>2" and <36" = >51mm and <914mm) shall have a maximum tolerance of plus or minus one-half inch (½" =13mm).
c. Dimensions 36 inches or greater (36" or > = 914mm or >) shall have a maximum tolerance of plus or minus one inch (1" = 25mm).
d. Slopes may not exceed maximums. Slopes shall be measured in two-foot increments.

Note: Tolerances do not apply to minimums or maximums.

2.4.5 When a percentage is calculated to determine the number of *accessible elements* , if the number ends in a fraction of five-tenths (.5) or more, the number shall be rounded up to the next whole number. If the number ends in a fraction less than five-tenths (.5), the number shall be rounded down.

2.4.6 When calculating the conversion from inches to millimeters (using 1"=25.4mm), if the number ends in a fraction of five-tenths (.5) or more, the number shall be rounded up to the next whole number. If the number ends in a fraction less than five-tenths (.5), the number shall be rounded down.

2.5 REASONABLE MODIFICATIONS

Reasonable modifications to *public use* and *common use* spaces in a *multiple dwelling* must comply with 521 CMR. *Reasonable modifications* to an individual unit do not need to comply with 521 CMR.

2.5.1 Departures from particular technical and scoping requirements of 521 CMR by the use of other designs and technologies are permitted without a variance, where the alternative designs and technologies used will provide substantially equivalent or greater access and usability of the facility.

2.00: **PURPOSE AND SCOPE**

2.6 MAINTENANCE OF ACCESS FEATURES

At all times, accessibility features must be maintained and fully operational. (*i.e*. access aisles kept clear at all times, mechanical devices be kept in operating condition, *etc*.).

521 CMR 3.00: **JURISDICTION**

3.1 SCOPE

All work performed on *public buildings or facilities* (*see* **521 CMR 5.00: DEFINITIONS**), including *construction, reconstruction, alterations, remodeling, additions,* and *changes of use* shall conform to 521 CMR.

3.1.1 To determine the scope of compliance, refer to **521 CMR 3.2, New Construction** and **521 CMR 3.3, Existing Buildings**. In the absence of jurisdiction by 521 CMR, 780 CMR: the State Building Code may apply.

3.2 NEW CONSTRUCTION

All new construction of *public buildings/facilities* shall comply fully with 521 CMR.

3.3 EXISTING BUILDINGS

All *additions* to, *reconstruction, remodeling,* and *alterations* or *repairs* of existing *public buildings or facilities*, which require a building permit or which are so defined by a state or local inspector, shall be governed by all applicable subsections in **521 CMR 3.00: JURISDICTION**.

For specific applicability of 521 CMR to existing multiple dwellings undergoing renovations, see **521 CMR 9.2.1**.

3.3.1 If the work being performed amounts to less than 30% of the *full and fair cash value* of the *building* and

a. if the work costs less than $100,000, then only the work being performed is required to comply with 521 CMR

or

b. if the work costs $100,000 or more, then the work being performed is required to comply with 521 CMR. In addition, an *accessible* public *entrance* and an *accessible* toilet room, telephone, drinking fountain (if toilets, telephones and drinking fountains are provided) shall also be provided in compliance with 521 CMR.

Exception: General maintenance and on-going upkeep of existing, underground transit facilities will not trigger the requirement for an *accessible entrance* and toilet unless the cost of the work exceeds $500,000 or unless work is being performed on the *entrance* or toilet.

Exception: Whether performed alone or in combination with each other, the following types of *alterations* are not subject to **521 CMR 3.3.1**, unless the cost of the work exceeds $500,000 or unless work is being performed on the entrance or toilet. (When performing exempted work, a memo stating the exempted work and its costs must be filed with the permit application or a separate building permit must be obtained.)

a. Curb Cuts: The construction of *curb cuts* shall comply with **521 CMR 21.00: CURB CUTS.**

3.00: **JURISDICTION**

b. *Alteration* work which is limited solely to electrical mechanical, or plumbing systems; to abatement of hazardous materials; or retrofit of automatic sprinklers **and** does not involve the *alteration* of any *elements* or *spaces* required to be *accessible* under 521 CMR. Where electrical outlets and controls are altered, they must comply with 521 CMR.

c. Roof repair or replacement, window repair or replacement, repointing and masonry repair work.

d. Work relating to septic system repairs, (including Title V, 310 CMR 15.00, improvements) site utilities and landscaping.

3.3.2 If the work performed, including the exempted work, amounts to 30% or more of the *full and fair cash value* (*see* **521 CMR 5.00**) of the *building* the entire *building* is required to comply with 521 CMR.

a. Where the cost of constructing an *addition* to a building amounts to 30% or more of the *full and fair cash value* of the existing *building*, both the *addition* and the existing *building* must be fully *accessible*.

3.3.3 Alterations by a tenant do not trigger the requirements of **521 CMR 3.3.1b and 3.3.2** for other tenants. However, *alterations, reconstruction, remodeling, repairs, construction,* and *changes in use* falling within **521 CMR 3.3.1b and 3.3.2**, will trigger compliance with **521 CMR** in areas of *public use*, for the owner of the *building*.

3.3.4 No *alteration* shall be undertaken which decreases or has the effect of decreasing accessibility or usability of a *building* or *facility* below the requirements for new *construction*.

3.3.5 If *alterations* of single *elements*, when considered together, amount to an alteration of a room or *space* in a *building* or *facility*, that *space* shall be made *accessible*.

3.3.6 No *alteration* of an existing *element*, space, or area of a *building* or *facility* shall impose a requirement for greater accessibility than that which would be required for new *construction*.

3.4 CHANGE IN USE

When the use of a *building* changes from a private use to one that is open to and used by the public, an *accessible entrance* must be provided, even if no work is being performed. When a portion of a *building* changes use from a private use to one that is open to and used by the public, then an *accessible route* must be provided from an *accessible entrance* even if no work is being performed.

3.4.1 RESERVED FOR FUTURE ACTION: Changes in use, from private to public, in private residential homes where no work is being performed.

3.5 WORK PERFORMED OVER TIME

When the work performed on a *building* is divided into separate phases or projects or is under separate *building* permits, the total cost of such work in any 36 month period shall be added together in applying **521 CMR 3.3, Existing Buildings**.

3.00: **JURISDICTION**

3.6 MULTIPLE USES

When a *building* is occupied by two or more uses, the Regulations which apply to each use shall apply to such parts of the *building* within that *use*.

3.6.1 **521 CMR 3.3, Existing Buildings** shall apply based upon each *use* and not on the entire *building*.

Example: If a three story *building* valued at $300,000 has one floor of retail *use* and two floors of residential *use*, the *full and fair cash value* of the retail portion shall be 1/3 of the total value which would be $100,000.

3.7 PARTIAL APPLICATION

When only a portion of a *building* is subject to 521 CMR, the *full and fair cash value* shall be prorated by the ratio of the square footage of that portion to the square footage of the whole *building*.

Example: Where the whole *building* is 100,000 square feet, the *full and fair cash value* is $1,000,000, and the part subject to 521 CMR is 10,000 square feet (one-tenth of the total), then the *full and fair cash value* of the part subject to 521 CMR would be one-tenth of $1,000,000 or $100,000.

3.7.1 If the *Board* determines that such prorating would cause an inequitable result, the *Board* may otherwise calculate the *full and fair cash value* of the portion of the *building*.

3.8 OUTDOOR FACILITIES

For facilities where the *primary function areas* are outdoors, including but not limited to beaches, parks, picnic areas, playgrounds, and campsites, the *full and fair cash value* shall include the value of the land as well as any *buildings* or *facilities* on the land.

3.9 HISTORIC BUILDINGS

An historic *building* or *facility* that is listed or is eligible for listing in the National or State Register of Historic Places or is designated as historic under appropriate state or local laws may be granted a *variance* by the *Board* to allow alternate accessibility. If a variance is requested on the basis of historical significance, then consultation with the Massachusetts Historical Commission is required in order to determine whether a building or facility is eligible for listing or listed in the National or State Register of Historic Places. The Massachusetts Historical Commission may request a copy of the proposed variance request and supporting documentation to substantiate the variance request and its effect on historic resources. A written statement from the Massachusetts Historical Commission is required with the application for variance.

3.10 TEMPORARY STRUCTURES

Temporary *buildings* or *facilities*, including but not limited to reviewing stands, temporary classrooms, bleacher areas, exhibit areas, temporary banking facilities, temporary health screening services, or temporary pedestrian passageways around a *construction site*, shall comply with 521 CMR. Structures, *sites* and equipment directly associated with the actual processes of *construction*, such as scaffolding, bridging, materials hoists, or *construction* trailers, need not apply.

3.00: **JURISDICTION**

3.11 SECURITY STRUCTURES

Accessibility is not required to observation galleries used primarily for security purposes.

3.12 NON-OCCUPIABLE SPACES

Spaces accessed only by ladders, catwalks, crawl spaces, or freight (non-passenger) elevators, and frequented only by service personnel for repair purposes, are exempt. Such spaces may include, but are not limited to, elevator pits, elevator penthouses, piping or equipment catwalks.

521 CMR 4.00: **APPEAL AND VARIANCE**

4.1 VARIANCES

Application: An owner or an owner's representative or tenant who thinks that full compliance with 521 CMR is *impracticable* may apply to the *Board* for a *variance* from 521 CMR. Application for a *variance* shall be made on a form provided by the *Board* for this purpose, shall contain such information as is required by the *Board*, and shall be signed by the applicant.

4.1.1 *Board* Action: Upon receipt of an application for *variance*, the *Board* shall send a copy of the application to the local building inspector, the local disability commission and the independent living center for their input. The *Board* shall also investigate the matter and may:

a. grant the application with whatever conditions it deems appropriate or deny the application without a hearing. Any person aggrieved by the Board's action under 521 CMR may request an adjudicatory hearing within 30 days of the decision;
b. schedule a conference to consider the simplification or clarification of the issues and/or the possibility of an agreement disposing of all or any matters as may aid in the disposition of an adjudicatory proceeding. Those matters agreed upon by the parties shall be electronically recorded and/or reduced to writing and shall be signed by the parties, and shall thereafter constitute a part of the record;
c. commence an adjudicatory hearing in accordance with the provisions of M.G.L. c. 30A and 801 CMR 1.01 or 1.02: *Standard Adjudicatory Rules of Practice and Procedure*, as stated in the hearing notice.

4.2 COMPLAINTS

Initiating a Complaint: Any person who has knowledge or evidence that any other person or entity has not complied or is not complying with 521 CMR, may complain in writing to the *Board* on a special form available from the *Board*.

4.2.1 *Board* Action: Upon receipt of a complaint, the *Board* shall investigate the complaint, and may:

a. issue a stipulated order indicating the date compliance must be achieved.
b. schedule a conference to consider the simplification or clarification of the issues, the possibility of obtaining stipulations and agreements, the possibility of an agreement disposing of all or any of the issues in dispute, and any other matters as may aid in the disposition of an adjudicatory proceeding. Those matters agreed upon by the parties shall be electronically recorded and/or included in a written document and shall be signed by the parties, and shall thereafter constitute a part of the record.
c. commence an adjudicatory hearing in accordance with the provisions of M.G.L. c. 30A and 801 CMR 1.01 or 1.02: *Standard Adjudicatory Rules of Practice and Procedure*, as stated in the hearing notice.
d. dismiss a complaint at any time after notification to the complainant.

4.00: APPEAL AND VARIANCE

4.3 HEARINGS

All adjudicatory hearings shall be conducted in accordance with the provisions of M.G.L. c. 30A and 801 CMR 1.01 or 1.02: *Standard Adjudicatory Rules of Practice and Procedure*, as stated in the hearing notice.

4.3.1 Hearings will be scheduled within 60 days of the receipt of a request for an adjudicatory hearing unless the *Board* in its discretion extends such time for good cause shown. The *Board* will schedule hearings on two weeks notice unless it deems a shorter period necessary.

4.3.2 In proceedings under 801 CMR 1.02, the *Board* may provide for mandatory discovery.

4.3.3 The *Board* will issue a decision within 21 days of the hearing unless the *Board* in its discretion extends such time.

4.3.4 When the *Board* deems it necessary and subject to appropriation, the services of an independent expert may be sought.

4.4 REOPENING HEARING, MOTION FOR RECONSIDERATION

The *Board* on its own motion, or on motion of any applicant, complainant or aggrieved person, may reopen the hearing in order to receive additional evidence which was not reasonably available at the time of the hearing. The request for reopening shall summarize such evidence to be presented.

4.4.1 The *Board* shall notify all persons who testified at or received formal notice of an initial hearing of a decision to reopen a hearing to take further testimony or receive further evidence.

4.4.2 Within ten days from the date the *final decision* is received by the applicant or complainant, an applicant, complainant, or aggrieved person may file a motion for reconsideration, setting forth the grounds or statutory provisions relied upon to sustain the motion.

4.5 APPEALS

Any party aggrieved by the *final decision* of the *Board* may appeal such decision to State Superior Court in accordance with the provisions of M.G.L. c. 30A, § 14.

4.6 ADVISORY OPINIONS

Upon the written request, the *Board* may issue advisory opinions concerning the interpretation or applicability of 521 CMR. Advisory opinions issued by the *Board* may be relied upon by the persons requesting them, as well as by any agency, or official of a city, town, or region.

4.00: **APPEAL AND VARIANCE**

4.7 PETITION FOR THE ADOPTION OF REGULATIONS

Petition: Any interested person or such person's attorney may at any time petition the *Board* to adopt, amend or repeal any regulation. The petition shall be addressed to the *Board* and sent by mail or delivered in person during normal business hours. All petitions shall be signed by the petitioner or the petitioner's attorney, contain the petitioner's address or the address of the petitioner's attorney, and set forth clearly and concisely the text of the proposed regulation. The petition may be accompanied by any supporting data, views or arguments. A member of the *Board* may make a written recommendation that a regulation be adopted, amended or repealed.

4.7.1 Initial Procedure: Within 60 days of the receipt of a petition or recommendation, the *Board* shall hold a meeting to determine whether or not to schedule the petition or recommendation for further proceedings in accordance with M.G.L. c. 30A. If the regulation has been presented by petition, the *Board* shall notify the petitioner within ten days after making such a determination.

4.7.2 Procedure for the Adoption, Amendment or Repeal of Regulations:

a. The procedures for the adoption, amendment or repeal of any regulation shall comply with M.G.L. c. 30A.
b. Where no public hearing is required, the *Board* may afford any interested person or his duly authorized representative, or both, an opportunity to present data, views or arguments orally before the *Board* during the meeting at which the proposed action is to be considered. If the *Board* finds that such oral presentation is unnecessary or impracticable, it may require written presentation.
c. Where a public hearing is required, the *Board* shall afford any interested person or his duly authorized representative, or both, an opportunity to present statements and arguments orally. In its discretion, the *Board* may limit the length of oral presentation.

4.7.3 Filing of Regulations: Upon the adoption of a regulation, an attested copy shall be filed with the Secretary of the Commonwealth together with a citation of the statutory authority under which the regulation has been promulgated. The regulation shall take effect upon filing unless a later date is required by law or is specified by the *Board* in the Regulation.

NON-TEXT PAGE

521 CMR 5.00: **DEFINITIONS**

5.1 GENERAL

As used in 521 CMR, the following words shall have the meaning set forth in 521 CMR 5.00 unless the context otherwise requires.

ACCESS AISLE: An *accessible* pedestrian space between elements such as parking spaces, seating, or desks that provides clearances complying with 521 CMR.

ACCESSIBLE: A *site, building, facility* or portion thereof that complies with 521 CMR and that can be approached, entered, and used *by persons with disabilities*. When the term "*accessible*" is used, it shall mean both physical and communication accessible unless otherwise noted in 521 CMR.

ACCESSIBLE ELEMENT: An element complying with 521 CMR that can be used by *persons with disabilities* (for example, telephone, controls, appliances, equipment and the like).

ACCESSIBLE ROUTE: A continuous, unobstructed path connecting all *accessible* elements and spaces within or between *buildings* or *facilities*. Interior *accessible routes* may include corridors, floors, *ramps*, elevators, lifts, and *clear floor space* at fixtures. Exterior *accessible routes* may include parking, *access aisles*, *curb cuts*, crosswalks at vehicular ways, *walks*, *ramps*, and lifts.

ACCESSIBLE SPACE: Space that complies with 521 CMR and that can be used by *persons with disabilities*.

ADAPTABILITY: The ability of certain *building* spaces and elements, such as kitchen counters, sinks, and grab bars, to be added or altered so as to accommodate the needs of persons with or without disabilities or with different types or degrees of disability.

ADAPTABLE: Can readily be made *accessible* to, functional for, and safe for use by *persons with disabilities* without *structural change*.

ADDITION: An extension or increase in floor area or height of a *building* or structure.

ADMINISTRATIVE AUTHORITY: A governmental agency that adopts or enforces regulations for the design, construction, or alteration of *buildings* and *facilities*.

ALTERATIONS: A change or modification of a *building* or structure, or portion thereof, that requires a building permit. Alterations shall include but not be limited to: *remodeling*, renovation, rehabilitation, *reconstruction*, historic restoration, changes or rearrangements in the plan configuration of walls and full height partitions, and any *repairs* which require a building permit. Ordinary *repairs* as defined in 780 CMR: The State Building Code are not alterations.

AREA OF RESCUE ASSISTANCE: An area, which has direct access to an exit or an area adjacent to an exit discharge, where people who are unable to use stairs or are unable to travel more than 100 feet to a public way may remain temporarily in safety to await further instructions or assistance during emergency evacuation.

5.00: DEFINITIONS

ASSEMBLY AREA: A room or space accommodating a group of individuals for recreational, educational, political, social, or amusement purposes or for the consumption of food and drink.

ASSISTIVE LISTENING SYSTEM: An *assistive listening system* picks up sound at or close to its source, amplifies it, and delivers it to the listener's ear without extraneous sound, reverberation and distortion via a telecoil on the individual's hearing aid and through earphones. An *assistive listening system* may stand alone or augment a conventional public address or audio address system, depending on the requirements of the room. The type of *assistive listening system* appropriate for a particular application depends on the characteristics of the setting, the nature of the program, and the intended audience. Magnetic induction loops, infra-red and radio frequency systems are types of listening systems that are appropriate for various applications.

AUTOMATIC DOOR: A door equipped with a power-operated mechanism and controls which open and close the door automatically. The switch that begins the automatic cycle may be a photoelectric device, floor mat, or manual switch (see *power-assisted* door).

BATHROOM: A space or a series of interconnected spaces that contain a toilet, sink, and bathtub or shower.

BOARD: The Architectural Access Board within the Executive Office of Public Safety, Commonwealth of Massachusetts.

BRAILLE: A standardized system for communicating in writing with persons who are blind. Grade II Braille is standard literary Braille. Standard dimensions for literary Braille are as follows: Dot diameter: .059 inches; Inter-dot spacing: .090 inches; Horizontal separation between cells: .241 inches; and Vertical separation between cells: .395 inches.

BRIDGE PLATE: An element which makes the final transition between a fixed or floating platform and a vehicle or vessel.

BUILDING: A structure enclosed within exterior walls or fire walls (as defined in 780 CMR), built, erected and framed in a combination of any materials, whether portable or fixed having a roof, to form a structure for the shelter of persons, animals or property. For the purposes of this definition, "roof" shall include an awning or similar covering, whether or not permanent in nature. The word "*building*" shall be construed where the context requires, as though followed by the words "or part or parts thereof". For application of 521 CMR, each portion of a *building* which is separated from other portions by fire walls (as defined in 780 CMR) and are not dependent on the existing *building* for *accessible* elements shall be considered as a separate *building*.

CHANGE OF USE: Varying the use of a *building* from a private use to one that is open to and used by the public.

CLEAR: Unobstructed.

5.00: DEFINITIONS

CLEAR FLOOR SPACE: The minimum unobstructed floor or ground space required to accommodate a single, stationary wheelchair and occupant. Unless otherwise stated, the dimensions of *clear floor space* shall be 30 inches by 48 inches (30" by 48" = 762mm by 1219mm) and shall be *level*.

CLOSED CIRCUIT TELEPHONE: A telephone with dedicated line(s), such as a house phone, courtesy phone, or security gates with intercoms, that require voice communication to obtain clearance to enter a *facility* or *project*.

COMMON USE: Refers to those interior and exterior rooms, spaces, or elements that are made available for the use of a restricted group of people (for example, occupants of homeless shelters, office buildings, residences or the guests of such occupants).

COMMUTER RAIL: Short-haul passenger service operating in metropolitan and suburban areas, whether within or across geographical boundaries of a state, usually characterized by reduced fare, multiple ride, and commutation tickets, and by morning and afternoon peak period operations. This term does not include light or rapid rail transportation.

COMPLEX: Multiple housing developed on one or more sites by a single entity.

For complexes currently owned or financed by public agencies, including local housing authorities, Massachusetts Housing Finance Agency, or Housing and Urban Development, the *complex* means the whole of one or more residential structures and appurtenant structures, equipment, roads, walks, and parking lots which a single entity owns, within a municipality, and is or will be covered by a single mortgage contract for permanent financing or was originally constructed or acquired under one contract for financial assistance for new construction or acquisition

CONSTRUCTION: Work for which a building permit is required, work determined to be *construction* by a state or local building inspector, or work for which a certificate of occupancy is necessary upon completion.

CROSS SLOPE: The slope that is perpendicular to the *running slope* and the direction of travel.

CURB CUT: A short ramp cutting through a curb.

DETECTABLE WARNING: A standardized surface feature built in or applied to walking surfaces or other elements to give warning of hazards on a circulation path.

DWELLING UNIT: A unit providing living facilities for one or more persons. (*See* **521 CMR 8.00: TRANSIENT LODGING FACILITIES** for more detailed information.)

5.00: DEFINITIONS

EGRESS, MEANS OF: A continuous and unobstructed path of travel from any point in a *building* or structure to a public way and consisting of three separate and distinct parts: (a) the exit access, (b) the exit, and (c) the exit discharge. A *means of egress* comprises the vertical and horizontal means of travel and shall include intervening room spaces, doorways, hallways, corridors, passageways, balconies, ramps, stairs, enclosures, lobbies, horizontal exits, courts and yards.

An *accessible means of egress* is one that complies with 521 CMR and does not include stairs, steps, or escalators. *Areas of rescue assistance* or evacuation elevators may be included as part of *accessible means of egress*.

ELEMENT: An architectural or mechanical component of a *building*, *facility*, *space* or *site*, e.g., telephone, curb cut, door, drinking fountain, seating, or water closet.

ENTRANCE: Any access point to a *building* or portion of a *building* or *facility* used for the purpose of entering. An *entrance* includes the approach *walk*, stairs, lifts, ramp or other vertical access leading to the entrance platform; the entrance platform itself; vestibules, if provided; the entry door(s) or gate(s); and the hardware of the entry door(s) or gate(s).

FACILITY: All or any portion of *buildings*, structures, *site* improvements, *complexes*, equipment, roads, *walks*, passageways, parking lots, or other real or personal property located on a *site*.

FINAL DECISION: Determination of the *Board*, arrived at after consideration of the facts brought to its attention in accordance with 521 CMR.

FULL AND FAIR CASH VALUE OF THE BUILDING: The assessed valuation of a *building* (not including the land) as recorded in the Assessor's Office of the municipality at the time the *building* permit is issued as equalized at 100% valuation. The 100% equalized assessed value shall be based upon Massachusetts Department of Revenue's determination of the particular city's or town's assessment ratio.

EXAMPLE: Town X has an assessment ratio of 40%, the particular *building* in question is assessed at $200,000.00. To determine the equalized assessed value of this *building*, divide $200,000.00 by 0.4. The equalized assessed value equals $500,000.00.

EXCEPTIONS:

a. If no assessed value exists, or the assessed value is more than three years old, a request to substitute the appraised value may be submitted to the *Board*. The request to use the appraised value must be submitted by a certified appraiser or for transit facilities, either a certified appraiser or an independent registered professional engineer and must be submitted prior to obtaining a *building* permit for the project.
b. The value of *multiple dwellings* owned or financed by public sector agencies, local housing authorities, Massachusetts Housing Finance Agency, or the Department of Housing and Urban Development shall be determined by *replacement cost*.
c. The value of buildings owned, constructed, or renovated by the Commonwealth of Massachusetts shall be determined by the *replacement cost*.

5.00: **DEFINITIONS**

When part of a *building* is subject to 521 CMR, the *full and fair cash value* shall be based on the percentage of the *full and fair cash value* of the whole which equals the ratio of the square footage of the part of the *building* to the square footage of the whole *building*; if the *Board* determines the application of this formula to cause an inequitable result, the *Board* may otherwise calculate the *full and fair cash value* of the part of a *building* at issue.

> EXAMPLE: Where the whole *building* is 100,000 square feet, the part in question is 10,000 square feet, and the equalized value of the whole is $1,000,000.00, the *full and fair cash value* of the part is $100,000.00

GROUND FLOOR: The floor of a *building* closest to the level of the exterior grade and any floor within 36 inches (36" = 914mm) of an exterior grade at some or all of its perimeter. *Buildings* on sloped *sites* may have more than one *ground floor*. For *multiple dwellings* with a garage or commercial space at grade level, the first floor of *dwelling units* above the garage or commercial space shall be considered the *ground floor*.

GROUP 1: Applies to *dwelling units* that have features that can be modified without *structural change* to meet the specific functional needs of an occupant with a disability.

GROUP 2A: Applies to *dwelling units* that have features similar to Group 1, but have the additional feature of greater floor space to accommodate the needs of occupants who need such space due to their disability.

GROUP 2B: Applies to *dwelling units* that contain features that provide, at the time of initial construction, full accessibility without need for further modification.

HALF BATHROOM: A space with a toilet and a sink.

IMPRACTICABLE/IMPRACTICABILITY:

(a) Compliance with 521 CMR would be technologically unfeasible; or

(b) compliance with 521 CMR would result in excessive and unreasonable costs without any substantial benefit to persons with disabilities.

LEVEL: Sloped no more than 1:50 or 2%

LIGHT RAIL: A *light rail* vehicle is a streetcar type vehicle operated on city streets, semi-exclusive rights of way, or exclusive rights of way.

LODGING HOUSE: A building where lodgings are let to four or more persons not within second degree of kindred to the persons operating the facility, including fraternity houses and dormitories of educational institutions.

LOFT: An intermediate level between the floor and ceiling of any story, located within a room or rooms of a dwelling.

5.00: **DEFINITIONS**

MARINE FACILITIES: *Marine facilities* shall include, but not be limited to, piers, docks, wharves, bulkheads, seawalls, and any other fixed manmade structures at the land/water interface, and floating structures including barges, floating docks, and rafts which provide access from the water's edge to floating vessels including, but not limited to, boats, ships, ferries, or any other form of waterborne transportation.

MARINE RAMPS: *Marine ramps* are ramps, gangways, or walkways with a maximum slope of 1:12, or with any slope that is less steep than 1:12, under nominal marine conditions, and which span from land or a fixed pier to a floating vessel or dock, or which are fixed to a floating structure.

MARKED CROSSING: A crosswalk or other identified path intended for pedestrian use in crossing a *vehicular way*.

MEZZANINE OR MEZZANINE FLOOR: An intermediate level between the floor and ceiling of any story with an aggregate floor area of not more than 33% of the floor area of the story in which the level is located.

MULTIFAMILY DWELLING: Any *building* containing more than two dwelling units.

MULTIPLE DWELLING: A lodging or residential facility for hire, rent, lease, or sale, containing three or more *dwelling units*.

NOMINAL MARINE CONDITIONS: Denotes a condition in the marine environment where physical facilities are unmoved by the effects of wind, waves, wakes, currents, and weather conditions.

OCCUPIABLE: A room or enclosed space designed for human occupancy in which individuals congregate for amusement, education or similar purposes, or in which occupants are engaged in labor, and which is equipped with *means of egress*, light, and ventilation.

OPERABLE PART: A part of a piece of equipment or appliance used to insert or withdraw objects, or to activate, deactivate, or adjust the equipment or appliance (for example, coin slot, pushbutton, handle).

ORDINARY REPAIRS: Any maintenance which does not affect structure, egress, fire protection systems, fire ratings, energy conservation provisions, plumbing, sanitary, gas, electrical or other utilities.

PERSONS WITH DISABILITIES: Individuals who experience substantial limitations in one or more major life activities, including but not limited to such functions as performing manual tasks, walking, seeing, hearing, speaking, breathing, learning and working. *Persons with disabilities* shall include but not be limited to those who have the inability to walk, difficulty walking, hearing disabilities, lack of coordination, reaching and manipulation disabilities stamina, difficulty interpreting and reacting to sensory information and extremes in physical size.

5.00: DEFINITIONS

POWER-ASSISTED DOOR: A door with a mechanism that helps to open the door or that reduces the opening resistance of a door, upon the activation of a switch or a continued force applied to the door itself.

PRIMARY FUNCTION AREA: A major activity for which the *facility* is intended. Areas that contain a primary function include, but are not limited to: the customer services lobby of a bank, the dining area of a cafeteria, the meeting rooms in a conference center, as well as offices and all other work areas in which the activities of the public are carried out.

PROJECT: *See* **521 CMR 5.00: Complex**

PROPRIETOR: One with title to the establishment who owns the entire fee or portion of the entire fee and the consequent right to dispose of the establishment or such fee portion as vested in him or her.

PUBLIC BUILDING:

a. A *building* privately or publicly financed that is open to and used by the public, including but not limited to transportation terminals, institutional buildings, educational buildings, commercial buildings, buildings having places of assembly, hotels, motels, dormitories, *multiple dwellings* consisting of three or more units, 5% of the units in lodging or residential facilities for rent, hire or lease containing 20 or more units, public use and common use areas of apartment buildings and condominiums, parking lots of 15 or more automobiles, public sidewalks and ways, funeral homes, and public rest rooms, and public areas of shopping centers and restaurants.
b. A *building* constructed by the Commonwealth or any political subdivision thereof with public funds and open to public use, including but not limited to those constructed by public housing authorities, the Massachusetts Port Authority, the Massachusetts Parking Authority, the Massachusetts Turnpike Authority, the Massachusetts Bay Transportation Authority, and building authorities of any public educational institution or their successors.

PUBLIC USE: Describes interior or exterior rooms or spaces that are made available to the general public. Public use may be provided at a *building* or *facility* that is privately or publicly owned.

RAMP: A walking surface that has a running slope greater than 1:20 but no greater than or equal to 1:12.

RAPID RAIL: A subway type transit vehicle railway operated on exclusive private rights of way with high level platforms. Rapid rail may be operated on elevated or at grade level track separated from other traffic.

REASONABLE MODIFICATION: Physical changes to *multiple dwellings* requested by *persons with disabilities* or their agents to enable full use and enjoyment thereof, as described in M.G.L., c. 151B, § 4(a), or St. 1989, c. 722.

5.00: **DEFINITIONS**

RECONSTRUCTION: The tearing down, removal, demolition or replacement of a *public building* or part of a *public building*.

REMODELING: Modification beyond an interior decoration or involving any *structural changes*, or the redecorating of a *public building* for which the cost of such refurbishing, updating or redecorating equals or exceeds 5% of the *full and fair cash value of the building*.

REPAIR: The *reconstruction* or renewal of any part of an existing *building* for the purpose of its maintenance.

REPLACEMENT COST: Current cost of construction and equipment for a newly constructed *building*.

a. For multiple dwellings, *replacement cost* shall be determined by $73.32 per square foot.

b. For courthouses, correctional facilities, educational facilities and other buildings (other than multiple dwellings) owned, constructed, or renovated by the Commonwealth of Massachusetts, the *replacement cost* shall be determined by and reflected in the Commonwealth's Capital Asset Management Information System (CAMIS) survey and data base, for state owned buildings. The Division of Capital Asset Management (DCAM) shall file the CAMIS database, containing the replacement costs, with the *Board*. DCAM shall update the replacement costs annually as of the first day of January each year, based on the inflation rate determined by R.S. Means, including appropriate adjustments for location and other factors. For buildings that are not included in the CAMIS database, but may be renovated by DCAM such as county-owned facilities, the replacement costs shall be calculated by DCAM based on the replacement costs for comparable facilities that are included in the CAMIS database. DCAM shall supplement the CAMIS database on file with the *Board*, for any such building, by preparing and filing documentation identifying the replacement cost for the building and how it was calculated.

RUNNING SLOPE: The slope that is parallel to the direction of travel and perpendicular to the *cross slope*.

SERVICE ENTRANCE: An entrance intended primarily for delivery of goods or services.

SIDEWALK: A prepared *walk* within a street right of way.

SIGNAGE: Displayed verbal, symbolic, tactile, and/or pictorial information.

SITE: A parcel of land bounded by a property line, or a designated portion of a public right-of-way.

SITE IMPROVEMENT: Landscaping, paving for pedestrian and vehicular ways, outdoor lighting, recreational facilities, and the like, added to a *site*.

SLEEPING ACCOMMODATIONS: Rooms in which people sleep; for example, dormitory and hotel or motel guest rooms or suites.

5.00: DEFINITIONS

SPACE: A definable area, *e.g.*, room, toilet room, hall, assembly area, entrance, storage room, alcove, courtyard, or lobby.

SPRING TIDE RANGE: The *spring tide range* for coastal communities in Massachusetts shall be that number published in "Table 2 - Tidal Difference and other Constants" of the current: *Tide Tables - High and Low Tide Predictions East Coast of North America and South America including Greenland* as published by the U.S. Department of Commerce, National Oceanographic and Atmospheric Administration, National Ocean Service.

STORY: That portion of a *building* included between the upper surface of a floor and upper surface of the floor or roof next above. If such portion of a *building* does not include occupiable space, it is not considered a *story* for the purposes of 521 CMR. There may be more than one floor level within a *story* as in the case of a *mezzanine* or *mezzanines*.

STRUCTURAL CHANGE: *Structural change* includes major *reconstruction* of walls or partitions or relocation of bearing walls or partitions. Minor alterations including the opening of sections of walls and/or the relocation of equipment or fixtures is not considered a *structural change*.

STRUCTURAL FRAME: The *structural frame* shall be considered to be the columns and the girders, beams, trusses, foundation and spandrels having direct connections to the columns and all other members that are essential to the stability of the *building* as a whole.

STRUCTURAL STRENGTH: *Structural strength* of grab bars, shower seats, fasteners and mounting devices shall be as follows:

a. Bending stress in a grab bar or seat induced by the maximum bending moment from the application of 250 lbs. shall be less than the allowable stress for the material of the grab bar or seat.
b. Shear stress induced in a grab bar or seat by the application of 250 lbs. shall be less than the allowable shear stress for the material of the grab bar or seat. If the connection between the grab bar or seat and its mounting bracket or other supports is considered to be fully restrained, then direct and torsional shear stresses shall be totaled for the combined shear stress, which shall not exceed the allowable shear stress.
c. Shear force induced in a fastener or mounting device from the application of 250 lbs. shall be less than the allowable lateral load of either the fastener or mounting device or the supporting structure, whichever is the smaller allowable load.
d. Tensile force induced in a fastener by direct tension force of 250 lbs. plus the maximum moment from the application of 250 lbs. shall be less than the allowable withdrawal load between the fastener and the supporting structure
e. Grab bars shall not rotate within their fittings.

TACTILE: Describes an object that can be perceived using the sense of touch.

5.00: **DEFINITIONS**

TACTILE WARNING: A surface texture applied to or built into walking surfaces or other elements to warn visually impaired persons of hazards in the path of travel.

TEMPORARY: Temporary buildings and facilities that are used by the public for a period of time not to exceed 90 days within any calendar year. Examples include, but are not limited to: reviewing stands, temporary classrooms, exhibit areas, street festivals, crafts fairs, music events, state and county fairs, sports events, dances, and temporary safe pedestrian passageways around a construction site.

TEMPORARY ACCESSIBLE PARKING: Where there are an insufficient number of accessible parking spaces or when permanent accessible parking spaces cannot be provided in time for an event, temporary accessible parking spaces can be created in permanent paved lots, as well as in dirt lots or fields.

TEMPORARY CURB RAMP: When temporary modifications are utilized to overcome level changes created by curbs.

TEMPORARY MODIFICATIONS: When changes to a site are anticipated to be in place for less than 90 days, temporary modifications compliant with 521 CMR must be made.

TEXT TELEPHONE (TTY): Technology which employs interactive graphic (*i.e*. typed) communications through the transmission of coded signals across the standard telephone network. These devices are also known as TDD's.

TIER I: *Tier I* marine facilities are docks and/or piers that service scheduled, waterborne passenger vessels with a vessel length of 40 feet (40' = 12m) or greater. These facilities will provide persons with disabilities unassisted access under nominal marine conditions.

TOWNHOUSE: A *dwelling unit* with finished living space on more than one *story*.

TRANSIENT LODGING: A *building*, *facility*, or portion thereof, excluding inpatient medical care facilities, that contains one or more *dwelling units* or sleeping accommodations not intended for permanent residence. Transient lodging may include but is not limited to resorts, group homes, hotels, motels, and dormitories.

TRANSIT FACILITY: A physical structure whose primary function is to facilitate access to and from a transportation system which has scheduled stops at the structure.

TRANSIT PLATFORM: A boarding area for rail transit vehicles.

TRANSITION PLATE: A *transition plate* is that element connected to the end of a moving *marine ramp* which provides access from the end of the *marine ramp* to a *level* platform.

5.00: DEFINITIONS

UNASSISTED ACCESS: *Unassisted access* enables a *person with a disability* to obtain information about and to maneuver a path of travel without the assistance of another person, except at those points and under those conditions under which individuals without disabilities would be in need of assistance from another person. This definition does not restrict the right of a *person with a disability* to request and receive assistance.

USE: Purpose for which the *building* is designed, used or intended to be used.

VEHICULAR WAY: A route intended for vehicular traffic, such as a street, driveway, or parking lot.

VESSEL LENGTH: *Vessel length* means the straight line horizontal measurement of the overall length from the foremost part of the boat to the aftermost part of the boat, measured from end to end over the deck, excluding sheer, and measured parallel to the centerline. Bow sprits, bumpkins, rudders, outboard motor brackets, handles, and other similar fittings, attachments, and extensions are not included in the measurement.

WALK (WALKWAY): An interior or exterior pathway with a prepared surface intended for pedestrian use, including but not limited to general pedestrian areas such as plazas, courts and crosswalks.

VARIANCE: Modification of or substitution for a Rule or Regulation.

ZONE OF REACH: An operable mechanism is within reach if it meets either criteria outlined in **521 CMR 6.5, Forward Reach or 521 CMR 6.6, Side Reach**.

521 CMR 6.00: SPACE ALLOWANCE AND REACH RANGES

6.1 WHEELCHAIR PASSAGE WIDTH

The minimum *clear* width for single wheelchair passage shall be 36 inches (36" = 914mm) except for a reduction to 32 inches (32" = 813mm) and that reduction shall not exceed a lineal distance of 24 inches (24" = 610mm). **See Fig. 6a.**

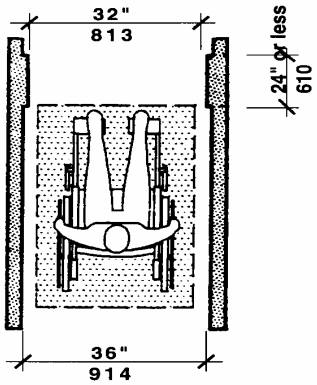

Clear width
Figure 6a

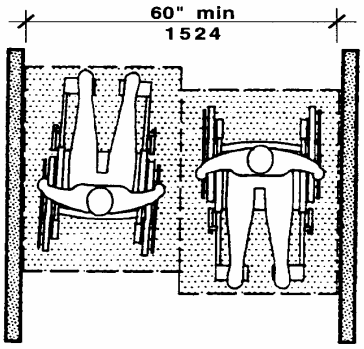

Two wheelchairs passing
Figure 6b

6.2 WIDTH FOR WHEELCHAIR PASSING

The minimum width for two wheelchairs to pass is 60 inches (60" = 1524mm) **See Fig. 6b.**

6.3 WHEELCHAIR TURNING SPACE

The space required for a wheelchair to make a 180-degree turn is a *clear space* of 60 inches (60" = 1524mm) diameter (**See Fig. 6c**) or a T-shaped space. **See Fig. 6d**.

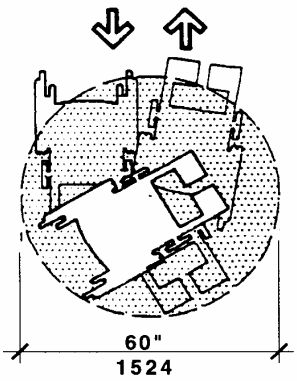

60" Turning Circle
Figure 6c

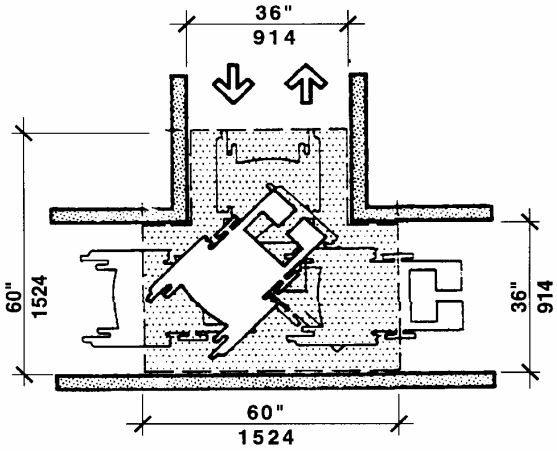

T-Turn
Figure 6d

6.4 CLEAR FLOOR OR GROUND SPACE FOR WHEELCHAIRS

shall comply with the following:

6.00: SPACE ALLOWANCE AND REACH RANGES

6.4.1 Size and Approach: The minimum *clear floor* or ground *space* required to accommodate a single, stationary wheelchair and occupant is 30 inches by 48 inches (30" x 48" = 762mm x 1219mm) (**See Fig. 6e**). The minimum *clear floor* or ground *space* for wheelchairs may be positioned for forward or parallel approach to an object (**See Fig. 6f and 6g**). *Clear floor* or ground *space* for wheelchairs may be part of the knee space required under objects.

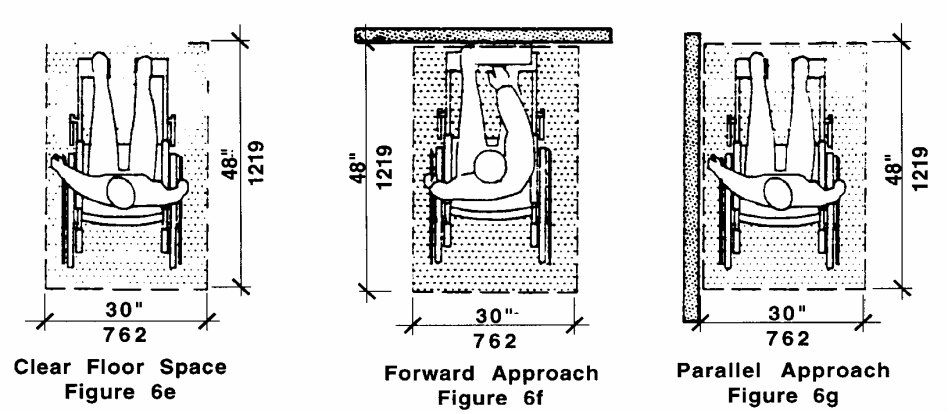

Clear Floor Space
Figure 6e

Forward Approach
Figure 6f

Parallel Approach
Figure 6g

6.4.2 Relationship of Maneuvering Clearance to Wheelchair Spaces: One full unobstructed side of the *clear floor* or ground *space* for a wheelchair shall adjoin or overlap an accessible route or adjoin another wheelchair *clear floor space*. If a *clear floor space* is located in an alcove or otherwise confined on all or part of three sides, additional maneuvering clearances shall be provided as shown in **Fig. 6h and 6j**.

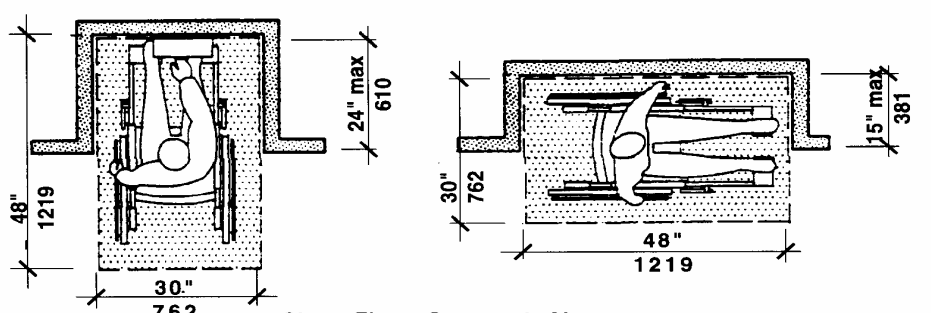

Clear Floor Space at Alcoves
Figure 6h

6.00: SPACE ALLOWANCE AND REACH RANGES

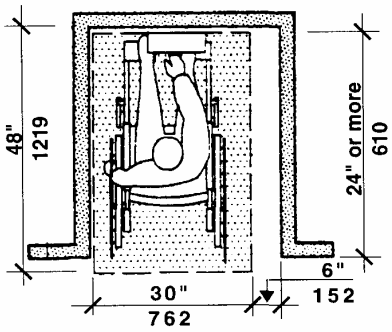

Maneuvering Space
Figure 6i

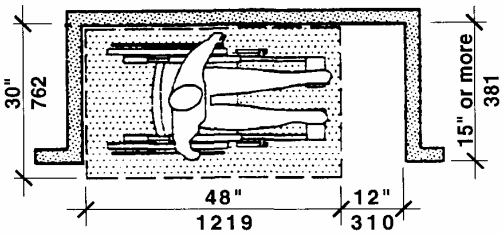

Maneuvering Space
Figure 6j

6.4.3 Surfaces for Wheelchair Spaces: *Clear floor space* for wheelchairs shall comply with **521 CMR 29, Floor Surfaces**.

6.5 FORWARD REACH

If the *clear floor space* only allows forward approach to an object, the maximum high forward reach allowed shall be 48 inches (48" = 1219mm) (**See Fig. 6k**). The minimum low forward reach is 15 inches (15" = 381mm). If the high forward reach is over an obstruction, reach and clearances shall be as shown in **Fig. 6l**.

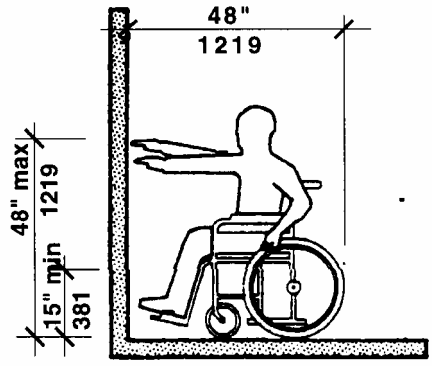

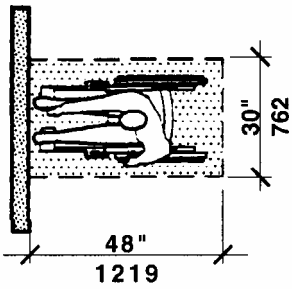

High Forward Reach Limit
Figure 6k

6.00: SPACE ALLOWANCE AND REACH RANGES

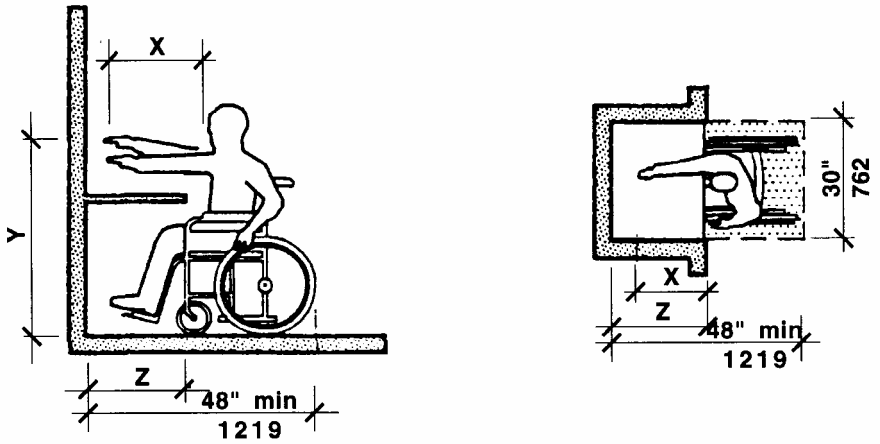

NOTE: X shall be less than or equal to 25" (635 mm). Z shall be greater than X.
When X is less than 20" (508 mm), then Y shall be 48" (1219 mm) max.
When X is 20" to 25" (508 to 635 mm), then Y shall be 44" (1118 mm) max.

Maximum Forward Reach over an Obstruction
Figure 6l

6.6 SIDE REACH

If the *clear floor space* allows parallel approach by a person in a wheelchair, the maximum high side reach allowed shall be 54 inches (54" = 1372mm) and the low side reach shall be no less than nine inches (9" = 229mm) above the floor (**See Fig. 6m**). If the side reach is over an obstruction, the reach and clearances shall be as shown in **Fig. 6n**.

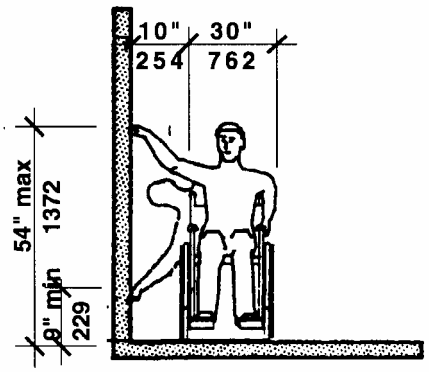

High and Low Side Reach
Figure 6m

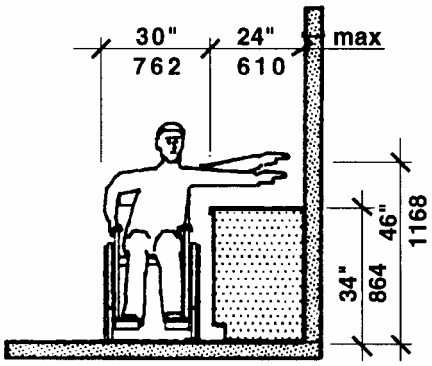

Maximum Side Reach over Obstruction
Figure 6n

6.00: **SPACE ALLOWANCE AND REACH RANGES**

NON-TEXT PAGE

521 CMR 7.00: RETAIL ESTABLISHMENTS

7.1 GENERAL

All retail establishments shall comply with 521 CMR, except as specified or modified in 521 CMR 7.00. Retail establishments shall include but not be limited to: banks, beauty shops, pharmacies, dry cleaners, clothing stores, grocery stores and supermarkets. Areas that must be *accessible* include but are not limited to the areas where the service or product of the establishment is offered to the public, dressing rooms, and public toilet rooms provided for clientele.

7.2 SALES SERVICE AND INFORMATION, OR TELLER WINDOWS

Shall comply with the following:

7.2.1 Cash register transactions: In department stores and retail stores where counters have cash registers and are provided for sales or distribution of goods or services to the public, at least one of each type shall comply with the following. **See Fig. 7a and 7b**.

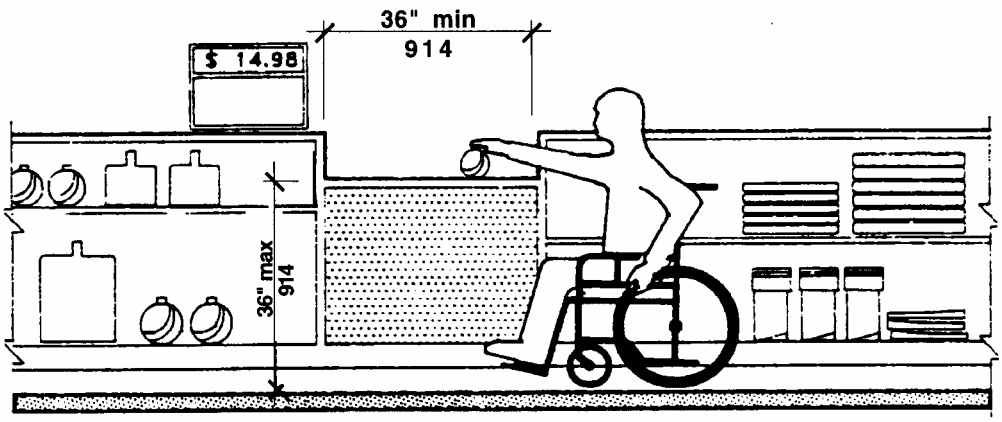

Elevation of Counter
Figure 7a

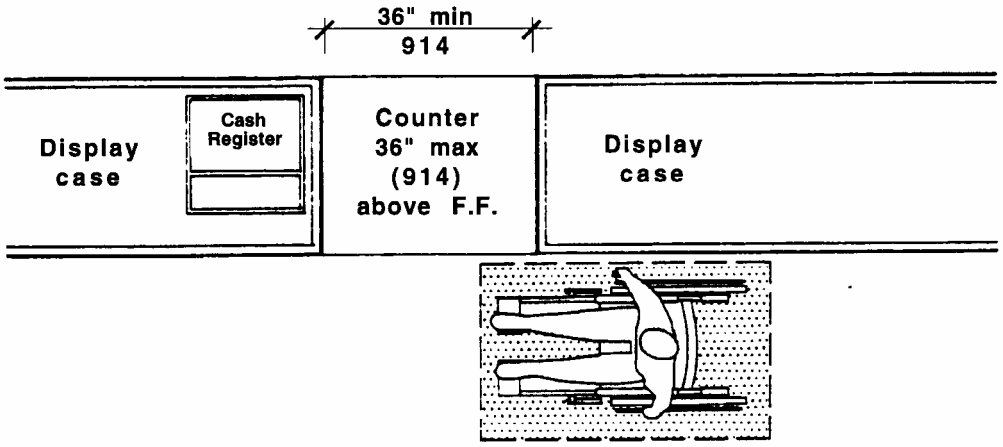

Plan of Counter
Figure 7b

7.00: RETAIL ESTABLISHMENTS

a. Location: The counter shall be on an *accessible route* complying with **521 CMR 20.00: ACCESSIBLE ROUTE**.
b. Length: A portion of the counter shall be at least 36 inches (36" = 914mm) in length and be located closest or nearest the cash register.
c. Height: That portion of the counter shall not exceed 36 inches (36" = 914mm) above the finish floor.
d. Distribution: The accessible counters must be dispersed throughout the *building* or *facility*.

7.2.2 Other Transactions: Ticketing counters, teller stations in a bank, registration counters in hotels and motels, box office ticket counters, and other counters that may not have a cash register but at which goods or services are sold or distributed, shall comply with the following. **See Fig. 7a and 7b**.

a. Location: The counter shall be on an accessible route complying with **521 CMR 20.00: ACCESSIBLE ROUTE**.
b. Length: The *accessible* portion of the counter or an auxiliary counter shall be at least 36 inches (36" = 914mm) in length.
c. Height: The counter shall not exceed 36 inches (36" = 914mm) above the finish floor.

7.3 AISLES

All aisles in retail establishments shall have a minimum *clear* width of 36 inches (36" = 914mm). Such aisles shall be maintained at all times to provide a *clear* width of 36 (36" = 914mm) inches.

7.4 CHECK-OUT AISLES

Shall comply with the following:

Total check-out aisles of each design	Minimum number of Accessible check-out aisles
1 - 4	1
5 - 8	2
9 - 15	3
over 15	3, plus 20% of additional aisles

Examples of check-out aisles of different "design" include those which are specifically designed to serve different functions. Different "design" shall include but is not limited to the following features: length of belt or no belt; or permanent signage designating the aisle as an express lane.

7.4.1 *Accessible* check-out aisles shall always be open.

7.4.2 Width: *Clear* aisle width for accessible check-out aisles shall be a minimum of 36 inches (36" = 914 mm). **See Fig. 7c**.

7.00: RETAIL ESTABLISHMENTS

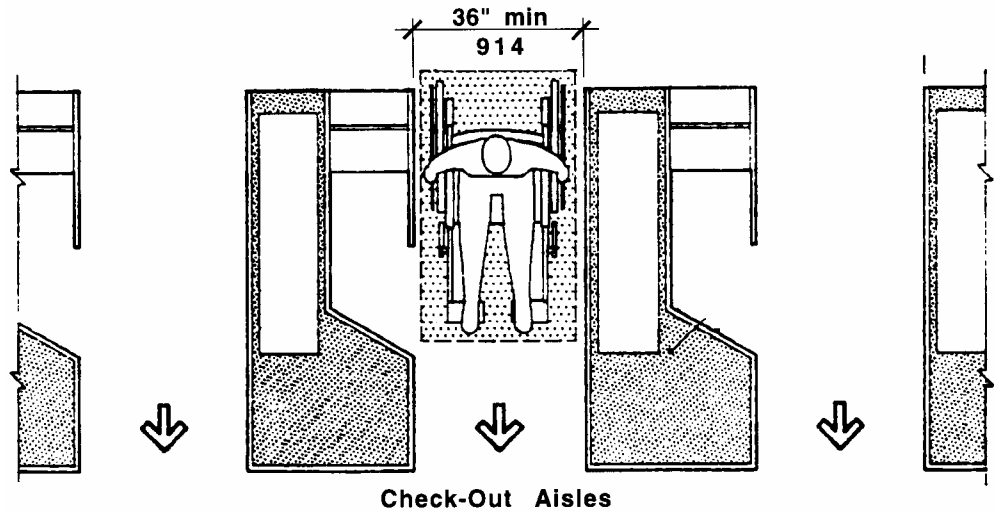

Check-Out Aisles
Figure 7c

7.4.3 Height: Maximum adjoining counter height shall not exceed 38 inches (38" = 965mm) above the finish floor. The top of the lip shall not exceed 40 inches (40" = 1016mm) above the finish floor.

7.4.4 Identification: *Signage* identifying accessible check-out aisles shall use the international symbol of accessibility and shall be mounted above the check-out aisle in the same location that the check-out number or type of check-out is displayed.

7.5 TURNSTILES, SECURITY CONTROL DEVICES AND SHOPPING CART BARRIERS

Wherever barriers are provided to prevent the removal of shopping carts from store premises including but not limited to turnstiles, an adjacent, alternate unlocked gate or door that is equally convenient to that provided for the ambulatory population shall be provided. It shall have a minimum clear opening of 32 inches (32" = 813mm).

7.6 DRESSING ROOMS

Where provided, dressing rooms shall comply with **521 CMR 33.00: DRESSING, FITTING AND CHANGING ROOMS**

7.7 SHELVING AND DISPLAY UNITS

In retail establishments shelving and display units shall be located on an *accessible route*. The requirements of **521 CMR 6.5, Forward Reach and 521 CMR 6.6, Side Reach** shall apply to those display units encouraging interactive participation including but not limited to, devices such as headphones in stores which sell music tapes and compact disks.

7.8 PUBLIC TOILET ROOMS

When public toilets are provided, they shall be *accessible*, on an *accessible route*, and in compliance with **521 CMR 30.00: PUBLIC TOILET ROOMS**.

7.00: **RETAIL ESTABLISHMENTS**

NON-TEXT PAGE

521 CMR 8.00: **TRANSIENT LODGING FACILITIES**

8.1 GENERAL

Transient lodging facilities shall comply with 521 CMR, except as specified or modified in **521 CMR 8.00**. *Transient lodging* shall include but not be limited to hotels, motels, bed and breakfasts, inns, boarding houses, dormitories and resorts. Transient lodging facilities shall also include homeless shelters, halfway houses, lodging houses and transitional housing, and other places that provide temporary accommodations. *Transient lodging* includes facilities, or portions thereof, used for *sleeping accommodations*. *Sleeping accommodations* in a medical care *facility* are covered by **521 CMR 13.00: MEDICAL CARE FACILITIES**.

Exception: **521 CMR 8.00** does not apply to an establishment located within a building that:

a. contains five or fewer beds or contains five or fewer rooms for rent or hire; and
b. is actually occupied as a residence by the *proprietor* of the establishment (*See* **521 CMR 5.00: DEFINITIONS.)**

8.2 PUBLIC AND COMMON USE AREAS

In transient lodging facilities, *common use* and *public use* areas shall be designed and constructed to comply with 521 CMR. (*See* **521 CMR 5.00: DEFINITIONS**.)

8.2.1 General: The *public use* areas in hotels, motels or inns shall include but not be limited to: the general public function areas, recreation areas, health facilities, pools, meeting areas, restaurants, lounges, public toilet rooms, public telephones, vending areas, laundry rooms, other amenities installed for the use of occupants, *walks*, elevators, and all public *entrances* as well as the stairs and corridors to the *accessible* units.

8.2.2 Registration counters shall comply with the following:

a. Location: The counter shall be on an *accessible* route.
b. Length: A portion of the counter or an auxiliary counter shall be at least 36 inches (36" = 914mm) in length.
c. Height: That portion of the counter shall not exceed 36 inches (36" = 914 mm) above the finish floor.
d. *Clear Floor Area*: Shall be provided in front of the counter.

8.3 PARKING SPACES

Where parking is provided, it shall comply or be capable of complying with the provisions of **521 CMR 23.2, Number through 521 CMR 23.8, Valet Parking**. If parking spaces are assigned to individual units, said spaces designated for *accessible* units shall have *signage* reserving said space. An international symbol of *accessibility* need not be used.

8.3.1 Visitor parking spaces: Where parking is provided for visitors, it shall comply fully with the requirements of **521 CMR 23.00: PARKING AND PASSENGER LOADING ZONES**.

8.00: TRANSIENT LODGING FACILITIES

8.4 UNITS, SLEEPING ROOMS, AND SUITES: MINIMUM NUMBER

At least 5% but in no case less than one of the units, sleeping rooms, and suites shall be *accessible*. In applying the 5% rule to facilities which consist of more than one *building*, all of the units in the entire *facility* shall be added together.

8.4.1 Distribution: To provide *persons with disabilities* a range of options equivalent to those available to other persons served by the *facility*, *accessible* sleeping rooms and suites shall be dispersed proportionally among the various classes of *sleeping accommodations* available to patrons of the place of *transient lodging*. Factors to be considered include room size, price, location, smoking/ non-smoking, amenities provided, and the number and size of beds provided.

8.4.2 Equivalent Facilitation: The operator of a *facility* may elect to limit *construction* of *accessible* rooms to those intended for multiple occupancy, provided that these rooms are made available at the cost of a single occupancy room to an individual with disabilities who requests a single-occupancy room.

8.4.3 *Bathrooms* and Kitchens: *Accessible* units shall have *bathrooms* and kitchens (where provided), that comply with *Group 2B* requirements in **521 CMR 44.00: GROUP 2 BATHROOMS and 521 CMR 45.00: GROUP 2 KITCHENS**.

8.4.4 Wheel-in Showers: In transient lodging facilities with 50 or more sleeping rooms or suites, *accessible* sleeping rooms or suites shall include a wheel-in shower in conformance with the table below. Wheel-in showers shall comply with the requirements of **521 CMR 44.6.2, Showers**.

Number of rooms	Rooms with Wheel-in Showers
50 to 100	1
101 to 200	2
201 to 300	3
301 to 400	4
401 to 500	5
501 to 1000	2% of total
1001 and over	22 plus one for each 100 over 1000

8.00: TRANSIENT LODGING FACILITIES

8.4.5 *Sleeping Accommodations* for persons who are deaf or hard of hearing. In all *transient lodging* facilities, additional *accessible* sleeping rooms and suites with accommodations for persons who are deaf or hard of hearing shall be provided in conformance with the table below. These rooms and suites shall comply with the requirements of **521 CMR 8.6, Sleeping Accommodations**.

Number of Rooms	Accessible Equipment Provided
5 to 25	1
26 to 50	2
51 to 75	3
76 to 100	4
101 to 150	5
151 to 200	6
201 to 300	7
301 to 400	8
401 to 500	9
501 to 1000	2% of total
1001 and over	20 plus 1 for each 100 over 1000

8.4.6 In facilities with multi-bed rooms (such as dormitories) or spaces, 5% of the beds shall comply with **521 CMR 8.5.3, Maneuvering space**.

8.5 UNITS, SLEEPING ROOMS AND SUITES: MINIMUM REQUIREMENTS
Accessible units, sleeping rooms and suites shall comply with the following:

8.5.1 *Accessible Route*: *Accessible* units, sleeping rooms, and suites shall be on an *accessible route*. An *accessible route* shall connect all *accessible* spaces and *elements* including telephones, televisions, alarms clocks, and climate controls within the unit, sleeping room, or suite.

8.5.2 Elevators: An elevator is not required in a *transient lodging facility* that is less than three stories or that has less than 3000 square feet per story if all rooms are proportionately distributed in accordance with **521 CMR 8.4.1** and all public spaces are fully *accessible.*

8.5.3 Maneuvering Space: *Accessible* sleeping rooms shall have a 36 inch (36" = 914mm) *clear width* maneuvering space located along both sides of a bed, except that where two beds are provided, this requirement can be met by providing a 36 inch (36" = 9 14mm) wide maneuvering *space* located between the two beds.

8.5.4 Doors and doorways designed to allow passage into and within all *accessible* units, sleeping rooms, or suites shall comply with **521 CMR 26.00: DOORS AND DOORWAYS.**

8.00: TRANSIENT LODGING FACILITIES

8.5.5 Visitor Identification: Every entry door to each *accessible unit* shall have a means by which the person can visually identify a visitor before opening the door. This may be achieved by any of the following means:

a. A peephole mounted at 42 inches (42" = 1067mm) above the floor;
b. A vision panel in the door with its bottom edge no higher than 42 inches (42" = 1067mm) above the floor
c. A sidelight with its bottom edge no higher than 42 inches (42" = 1067mm) above the floor.

8.5.6 Storage: If fixed or built-in storage such as cabinets, shelves, closets, and drawers are provided in *accessible* spaces, at least one of each type of storage *space* shall comply with **521 CMR 34.00: STORAGE**.

8.5.7 Controls: All controls in *accessible* units, sleeping rooms, and suites shall comply with **521 CMR 39.00: CONTROLS**.

8.5.8 *Accessible* spaces: Where provided as part of an *accessible* unit, sleeping room, or suite, the following spaces shall be *accessible* and shall be on an *accessible route*:

a. the living area;
b. the dining area;
c. at least one sleeping area;
d. at least one *bathroom*;
e. if only half baths are provided, at least one *half bath*;
f. carports, garages or parking spaces; and
g. patios, terraces, and balconies.

8.5.9 Patios, Terraces, and Balconies: Where it is necessary to utilize a door threshold or a change in level between the interior and exterior greater than ½ inch (½" = 13mm) to protect the integrity of the unit from water or snow damage, equivalent facilitation such as raised decking or a *ramp* shall be provided. *See* **Fig. 8a**.

8.00: TRANSIENT LODGING FACILITIES

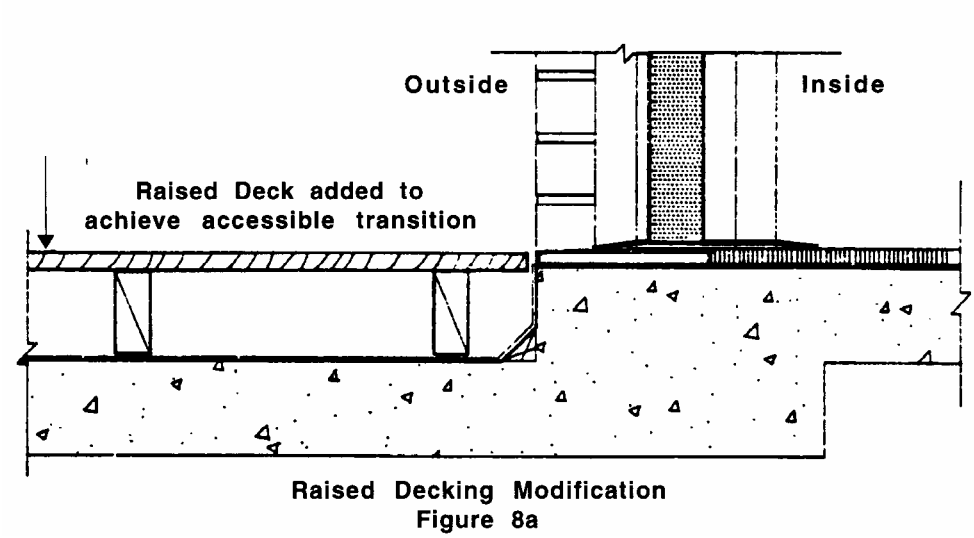

Raised Decking Modification
Figure 8a

8.5.10 Kitchenettes: When provided, kitchens and kitchenettes in *accessible* units, sleeping rooms, and suites shall comply with the requirements for *Group 2B* Kitchens in **521 CMR 45.00: GROUP 2 KITCHENS**.

8.5.11 Wet Bars: When provided as an accessory to an *accessible* unit, sleeping room or suite, wet bars or similar amenities shall be *accessible*, on an *accessible route*, and comply with the following:

a. *Clear floor space* for a front or parallel approach to cabinets, counters, sinks, and appliances shall be provided to comply with **Fig. 8b**.
b. Countertops and sinks shall be at a maximum height of 34 inches (34" = 864mm) above the floor.
c. *Accessible* storage: At least 50% of shelf space in cabinets or refrigerator/freezers shall comply with **521 CMR 6.5, Forward Reach and 521 CMR 6.6, Side Reach** and *space* shall be designed to allow for the operation of cabinet and/or appliance doors so that all cabinets and appliances are *accessible* and usable.
d. Controls and operating mechanisms shall comply with **521 CMR 39.00: CONTROLS**.

8.00: TRANSIENT LODGING FACILITIES

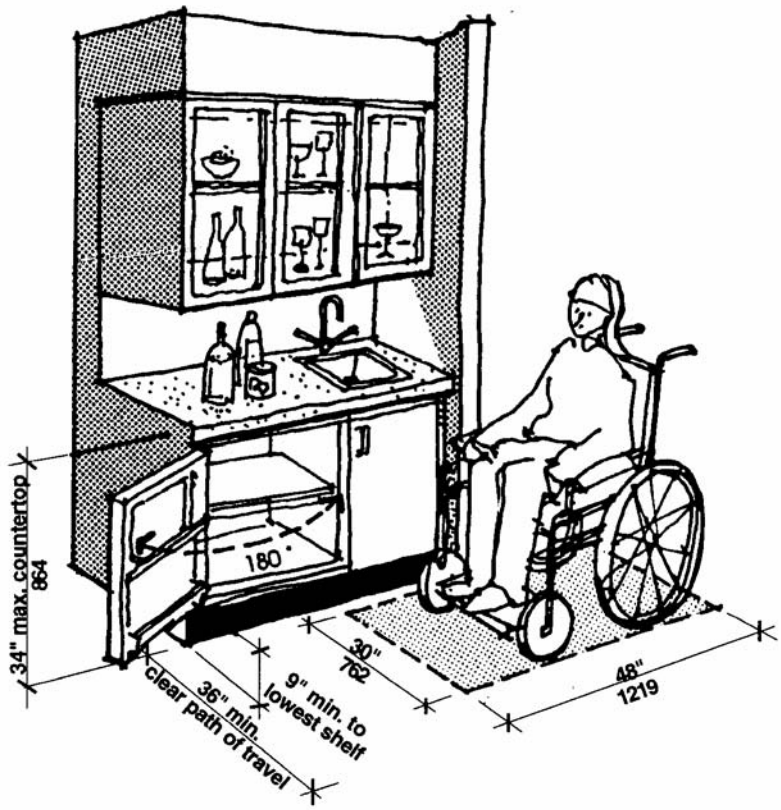

Clearances at Wet Bars and Kitchenettes
Figure 8b

8.6 SLEEPING ACCOMMODATIONS FOR PERSONS WHO ARE DEAF OR HARD OF HEARING

Sleeping accommodations for persons who are deaf or hard of hearing required by **521 CMR 8.4.5** shall comply with the following requirements for smoke/fire/safety alarms, visual signal devices, telephones, televisions, alarm clocks and climate controls.

8.6.1 Auxiliary Visual Alarms: *Sleeping Accommodations* shall be equipped with auxiliary visual alarms which comply with 521 CMR 40.4:

a. a visual alarm connected to the *building* emergency alarm system; or
b. a standard 110-volt electrical receptacle into which such an alarm can be connected and a means by which a signal from the *building* emergency alarm system can trigger such an auxiliary alarm. Such receptacle shall be connected to the emergency or standby power, (if provided in the *building*).

The visual alarm signal shall be visible in all areas of the unit or room. Instructions for use of the auxiliary alarm or receptacle shall be provided.

8.00: **TRANSIENT LODGING FACILITIES**

8.6.2 Visual Notification Devices shall be provided in *sleeping accommodations* to alert room occupants of incoming telephone calls and a door knock or doorbell. Visual notification devices shall not be connected to auxiliary visual alarm signal appliances.

8.6.3 Telephones: Telephones in rooms for persons who are deaf or hard of hearing shall have volume controls complying with **521 CMR 37.00: PUBLIC TELEPHONES**. An *accessible* electrical outlet within 48 inches (48" = 1219mm) of a telephone connection shall be provided to facilitate the use of a *Text Telephone (TTY*).

8.6.4 Televisions: Where televisions are provided in sleeping rooms or suites, the operator of the *facility* shall provide a television amplifier and a caption decoder in rooms for persons who are deaf or hard of hearing.

8.6.5 Equivalent Facilitation: For rooms required under **521 CMR 8.3.5**, the operator of a facility may either permanently install the equipment required under **521 CMR 8.5** or may elect to install electrical outlets (including outlets connected to a facility's central alarm system) and telephone wiring in sleeping rooms and suites to enable persons with hearing impairments to utilize portable visual alarms and communication devices, which shall be provided by the operator of the *facility*.

8.7 OTHER SLEEPING ROOMS AND SUITES

Doors and doorways designed to allow passage into and within all sleeping units or other covered units shall comply with **521CMR 26.00: DOORS AND DOORWAYS** on the corridor side of the door only.

8.00: **TRANSIENT LODGING FACILITIES**

NON-TEXT PAGE

521 CMR 9.00: **MULTIPLE DWELLINGS**

9.1 GENERAL

A *multiple dwelling* is considered to be either a lodging *facility* or a residential *facility* for hire, rent, lease, or sale containing three or more *dwelling units* in a *building*. Facilities used for temporary accommodations are considered *transient lodging* facilities. *See* **521 CMR 8.00: TRANSIENT LODGING FACILITIES**. For public and common use spaces in *Multiple Dwellings*, *See* **521 CMR 10.00: PUBLIC USE AND COMMON USE SPACES IN MULTIPLE DWELLINGS**.

9.1.1 A lodging *facility* is a *building* or a portion of a *building*, primarily used for the purpose of *sleeping accommodations*. Lodging *facilities* shall include but not be limited to shelters, hospices, group homes, and congregate living facilities. A *dwelling unit* in a lodging *facility* is defined as the sleeping *space* provided to a single individual; i.e., a bedroom.

9.1.2 A residential *facility* is a *building* or *buildings* consisting of *dwelling units* each of which provides complete, independent living facilities for one or more persons, including permanent provisions for living, sleeping, eating, cooking and sanitation. When a *dwelling unit* houses more than three lodgers or boarders it is a lodging *facility*. Residential facilities shall include but not be limited to apartments, condominiums, assisted living and cooperatives.

9.2 **APPLICABILITY**

New *construction*: *Multiple dwellings*, for which building permits for new *construction* are issued on or after September 1, 1996 shall meet the requirements of **521 CMR 9.3, Group 1 Dwelling Units and 521 CMR 9.4, Group 2 Dwelling Units**.

9.2.1 *Renovation* and reuse: Any *building* previously occupied for any purpose, which is converted, renovated, reconstructed, altered or remodeled for residential *use* after this date is exempt from **521 CMR 9.3 Group 1 Dwelling Units**.

9.2.2 *Renovation* and reuse of dwelling units is subject to **521 CMR 9.4, Group 2 Dwelling Units** through **521 CMR 9.5, Dwelling Unit Interiors** provided the work being performed, in a three year period, exceeds 30% of the *full and fair cash value of the building* (*See* **521 CMR 3.3.2**). Work performed to public use and common use areas however, is subject to all of **521 CMR 3.3.**

9.3 **GROUP 1 DWELLING UNITS**

In *multiple dwellings*, for which building permits for new *construction* are issued on or after September 1, 1996, that are for rent, hire, lease or sale and that are equipped with an elevator, all *dwelling units* must be constructed as *Group 1 Dwelling Units*, except those covered in **521 CMR 9.4, Group 2 Dwelling Units**.

In *multiple dwellings* that are for rent, hire, lease, or sale but are not equipped with an elevator, only units on the *ground floor* must be constructed as *Group 1 Dwelling Units*.

9.00: MULTIPLE DWELLINGS

Group 1 units must comply with **521 CMR 9.5**, and, **521 CMR 42.00: GROUP 1 BATHROOMS; 521 CMR 43.00: GROUP 1 KITCHENS; and 521 CMR 46.00: GROUP 1 BEDROOMS**.

9.4 GROUP 2 DWELLING UNITS

In *multiple dwellings* that are for rent, hire, or lease (but not for sale) and contain 20 or more units, at least 5% of the *dwelling units* must be *Group 2A* units. *Group 2A* units must comply with **521 CMR 9.5, Dwelling Unit Interiors**; and **521 CMR 44.00: GROUP 2 BATHROOMS**; and **521 CMR 45.00: GROUP 2 KITCHENS**; and **521 CMR 47.00: GROUP 2 BEDROOMS**.

9.4.1 Total *dwelling units* in a complex: When *multiple dwellings* consist of more than one *building* on a *site* or are located on several, non-contiguous *sites*, all *dwelling units* shall be added together to determine applicability of 521 CMR 9.4.

9.4.2 Distribution: *Group 2A dwelling units* shall be proportionally distributed across the total number of units according to number of bedrooms, size, quality, price and location.

EXCEPTION FOR TOWNHOUSES: When 5% of the total number of units required to be accessible includes townhouses, they shall comply by any of the following means:

a. substitute a fully accessible flat of comparable size, amenities, etc.;
b. provide space for the future installation of a wheelchair lift to access either upper or lower level of townhouse.
c. provide space for the future installation of a residential elevator to access either the upper or lower level of the townhouse.

9.4.3 *Variance*: The *Board* may consider applications for a *variance* from the 5% requirement if there is a greater or lesser need for *Group 2A* units in certain areas of the Commonwealth. A *variance* may be granted only if there is a sufficient factual basis, using data from the central registry of the Massachusetts Rehabilitation Commission or other sources, to establish with a reasonable degree of certainty the present and future needs for the applicable *Group 2A* units. The *Board* may not require more than 10% of the *dwelling units* to be *Group 2A* units. A *variance* for less than 5% shall not be granted unless the applicant can demonstrate that the units are not needed by disabled persons and cannot be readily rented, hired, or leased to other persons. Applications for variances to increase or decrease must be made to the *Board* before the issuance of a building permit.

9.5 DWELLING UNIT INTERIORS

The interiors of all *Group 1* and *2 dwelling units*, except as exempted by **521 CMR 9.2.1,** shall comply with the following requirements:

9.00: MULTIPLE DWELLINGS

9.5.1 Doorways: All doorways and all openings that allow passage in a *Group 2* unit must comply with **521 CMR 26.2, Double Leaf Doorways,** through **521 CMR 26.11, Door Hardware.** All doorways and all openings that allow passage in *Group 1* units shall be capable of complying, without *structural change*, with **521 CMR 26.2, Double Leaf Doorways,** through **521 CMR 26.11, Door Hardware.** For door types such as bifold, pocket, and accordion doors, the clear opening is measured when the door is in its most fully open position. *See* **Fig. 26b** and **26c**. For *Group 1 units*, only the common area and apartment entrance door hardware are required to comply with **521 CMR 26.11, Door Hardware**.

9.5.2 Every entry door to each *dwelling unit* shall have a means by which the resident can visually identify a visitor before opening the door. This may be achieved by any of the following means:

a. In *Group 1 and 2A* units, a peephole mounted 60 inches (60" = 1524mm) above the floor, a vision panel in the door with its bottom edge no higher than 60 inches (60" = 1524mm) above the floor, or a sidelight with its bottom edge no higher than 60 inches (60" = 1524mm) above the floor, shall be provided.
b. In *Group 2B* units, an additional peephole mounted at 42 inches (42" = 1067mm) above the floor; a vision panel in the door with its bottom edge no higher than 42 inches (42" = 1067mm) above the floor; or a sidelight with its bottom edge no higher than 42 inches (42" = 1067mm) above the floor. *See* **Fig. 9a**.

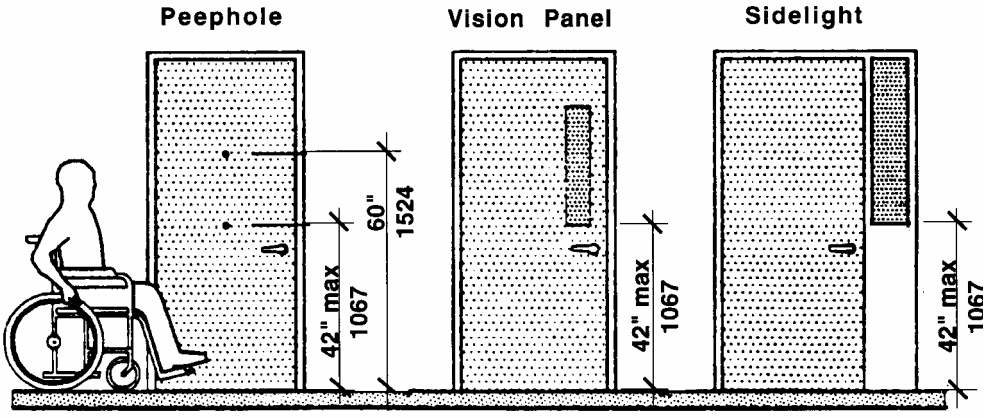

Visitor Identification - Group 2B
Figure 9a

9.5.3 Buzzers/bells and intercoms: All buzzers/bells and intercom systems shall comply with **521 CMR 6.5, Forward Reach** or **521 CMR 6.6, Side Reach**.

9.00: **MULTIPLE DWELLINGS**

9.5.4 *Accessible routes*: An *accessible route* at least 36 inches (36" = 914mm) wide shall be provided to all rooms and spaces in the *dwelling unit* including exterior decks, patios, balconies, attached garages, and storage closets. An *accessible route* shall be provided to mechanical spaces, only if the resident is expected to service, adjust or maintain the equipment therein.

a. Patios, Terraces, and Balconies: Where it is necessary to use a door threshold or a change in level between the interior and exterior, greater than ½ inch (½" = 13mm) to protect the integrity of the unit from water or snow damage, equivalent facilitation such as raised decking or a ramp shall be provided or capable of being provided.

In *Group 2B Units*, the exterior deck, patio, balcony surfaces shall be either permanently installed at no more than ½ inch (½" = 13mm) below the floor level of the interior of the *dwelling unit* or a temporary raised surface, such as duckboards, that is no more than ½ inch (½" = 13mm) below the interior floor *level* shall be available upon request.

9.5.5 Laundry Facilities: If a washer or dryer is provided in a *Group 1* or *Group 2A* unit, it shall be front loading or capable of being replaced with a front loading appliance. If a washer or dryer is provided in a *Group 2B dwelling unit*, it shall be front loading. Operating controls for washers and dryers shall be located within the *zone of reach*. If residents are expected to operate shut-off valves for the washer, the shut-off valves shall be located within the *zone of reach*. For common area laundry facilities, *see* **521 CMR 10.8, Laundry Facilities**.

9.5.6 Outlets: Electrical outlets, telephone outlets, cable TV jacks, and other wall outlets shall be located between 15 inches (15" = 381mm) and 48 inches (48" = 1219mm) above the floor, measured at the centerline of the lowest receptacle. All outlets shall be located no less than 18 inches (18" = 457mm) from interior corners. When outlets are located on walls above counters or other fixtures that are 22 inches (22" = 559mm) or greater in depth, they shall be no higher than 44 inches (44" = 1118mm). In *Group 1* and *2* units, at least one electrical outlet must be provided on the same wall as the telephone outlet and the door chime. Wherever exterior decks, patios, and balconies are provided, an exterior electrical outlet shall also be provided.

In *Group 2B* units, all telephone outlets must have an electrical outlet located within 12 inches (12" = 305mm) for installation of a *TTY*.

9.5.7 Controls and alarms: In *Group 2A* and *2B* units, the operable portions of all controls and alarms, including but not limited to: intercoms, and heat and air controls, shall be located between 36 and 48 inches (36" to 48" = 914mm to 1219mm) above the floor, measured at the centerline of the operable portion in its highest position. Operable portions shall be located at least 24 inches (24" = 610mm) from interior corners. Controls and alarms in *Group 1* units may be located at other locations so long as sufficient wiring is provided to permit future location from 36 inches to 48 inches (36" to 48" = 914mm to 1219mm) above the floor.

9.00: **MULTIPLE DWELLINGS**

9.5.8 Closets/pantries and linen closets: Shall comply with the following:

a. Closet shelves/poles: Closet walls shall be structurally capable of supporting the installation of shelves and poles which are relocatable from 42 inches to 72 inches (42" to 72" = 1067mm to 1829mm) to the top of shelf or pole whichever is higher.

b. Closet depth: Where the interior depth of the closet exceeds 24 inches (24" = 610mm), the doorway must comply with **521 CMR 26.5, Width** so that a disabled person can enter the closet. The bottom track of the closet door must also be recessed with no more than ¼ of an inch (¼" = 6mm) change in finish material. For *Group 2 units*, when the interior depth of the closet is 24 inches (24" = 610mm) or less, it shall be open to the room to permit a person with a disability to reach all parts of the closet. *See* Fig. 9b.

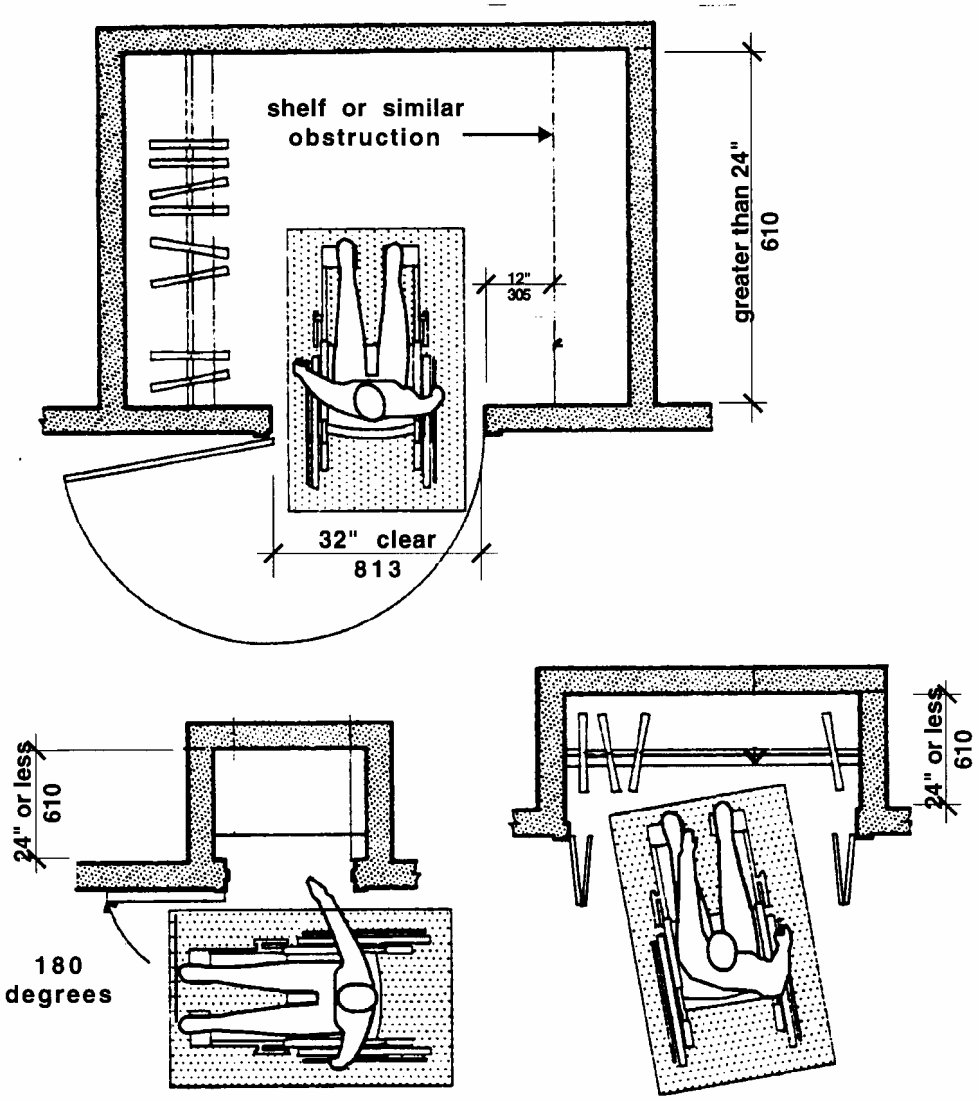

Closets
Figure 9b

9.00: **MULTIPLE DWELLINGS**

9.6 **TOWNHOUSES - GROUP 1 UNITS ONLY: RESERVED until further notice. In the interim, they are exempt**.

9.7 **SLEEPING ACCOMMODATIONS FOR PERSONS WHO ARE DEAF OR HARD OF HEARING**.
In addition to those units required to be *accessible* by **521 CMR 9.4, Group 2 Dwelling Units**, 2% of the total number of *dwelling units* in the complex or project, but not less than one shall comply with the following:

9.7.1 *Sleeping accommodations* for persons who are deaf or hard of hearing required by **521 CMR 9.7** shall comply with the following requirements for smoke/fire/safety alarms, visual signal devices, telephones, televisions, alarm clocks and climate controls.

9.7.2 Auxiliary Visual Alarms: *Sleeping accommodations* shall be equipped with auxiliary visual alarms which comply with 521 CMR 40.4:

a. a visual alarm connected to the *building* emergency alarm system; or
b. a standard 110-volt electrical receptacle into which such an alarm can be connected and a means by which a signal from the *building* emergency alarm system can trigger such an auxiliary alarm. Such receptacle shall be connected to the emergency or standby power, (if provided in the *building*).

The visual alarm signal shall be visible in all areas of the unit or room. Instructions for use of the auxiliary alarm or receptacle shall be provided.

9.7.3 Visual Notification Devices shall be provided in *sleeping accommodations* to alert room occupants of incoming telephone calls and a door knock or doorbell. Visual notification devices shall not be connected to auxiliary visual alarm signal appliances.

9.7.4 Equivalent Facilitation: For rooms required under **521 CMR 9.7**, the operator of a *facility* may either permanently install the equipment required under **521 CMR 9.7** or may elect to install electrical outlets (including outlets connected to a *facility*'s central alarm system) and telephone wiring in sleeping rooms and suites to enable persons with hearing impairments to utilize portable visual alarms and communication devices. For purposes of equivalent facilitation, such devices shall be provided by the operator of the *facility* during the tenancy of a person with a hearing impairment.

9.00: **MULTIPLE DWELLINGS**

NON-TEXT PAGE

521 CMR 10.00: PUBLIC USE AND COMMON USE SPACES IN MULTIPLE DWELLINGS

10.1 GENERAL

The *public use* and *common use* spaces of *multiple dwellings* in existing *buildings* consisting of 12 or more units in a *building*, shall be *accessible* and shall comply with **521 CMR.** The public use and *common use* spaces of *multiple dwellings* in new *construction* consisting of three or more units shall comply with **521 CMR**. *Public* and *common use* spaces are those spaces inside or outside a *building* that are used by residents and/or visitors. *Public use* and *common use* spaces shall include but not be limited to community facilities, meeting rooms, restaurants, recreation spaces, health facilities, pools, public toilet rooms, laundry areas, trash areas, storage areas, mailboxes, walks, sidewalks, parking lots and garages, entrances, elevators, lobbies and foyers, as well as corridors and stairways leading to *dwelling units*.

10.2 ACCESSIBLE ROUTES

There shall be an *accessible route* at least 36 inches (36" = 914mm) wide connecting *accessible* parking, *accessible* entrances, *public* and *common use* spaces, and *dwelling units*. Wherever possible, the *accessible route* shall be the shortest possible route, *see* **521 CMR 20.00: ACCESSIBLE ROUTE**

10.3 PARKING SPACES FOR DWELLING UNIT OCCUPANTS

Where parking is provided, it shall comply or be capable of complying with the provisions of **521 CMR 23.2, Number** through **521 CMR 23.8, Valet Parking**. The number of *accessible* spaces shall not be limited in number by **521 CMR 23.2.1, Number** but shall be provided in sufficient numbers to meet the needs of the *dwelling unit* occupants. If parking spaces are assigned to individual units, those spaces designated for *accessible* units shall have *signage* reserving said space. An international symbol of accessibility need not be used.

10.3.1 Visitor Parking Spaces: Where parking is provided for visitors, it shall comply fully with the requirements of **521 CMR 23.00: PARKING AND PASSENGER LOADING ZONES**.

10.4 DOORS

All doorways and openings located in *common use* and *public use* spaces and along *accessible routes* shall comply with **521 CMR 26.2, Revolving Doors** through **521 CMR 26.11, Door Hardware**.

10.5 STORAGE

If remote storage is available to residents, equivalent *accessible* storage shall be provided to residents.

10.6 ALARMS

Where a fire alarm is provided, it shall comply with **521 CMR 40.00: ALARMS**.

10.00: PUBLIC USE AND COMMON USE SPACES IN MULTIPLE DWELLINGS

10.7 HEIGHT OF CONTROLS

The highest position of the *operable parts* of any control, dispenser, receptacle, or other operable equipment shall be located within the *zone of reach* as defined in **521 CMR 5.00: DEFINITIONS**.

10.8 LAUNDRY FACILITIES

If laundry facilities are provided in *Multiple dwellings*, then equivalent, *accessible* laundry facilities shall be provided.

10.8.1 Location: Laundry facilities shall be on an *accessible* level and on an *accessible route*.

10.8.2 At least one washing machine and at least one clothes dryer shall be front loading, shall have a side hinged door, and shall be located so that the door can be opened 180°. **See Fig. 10a**.

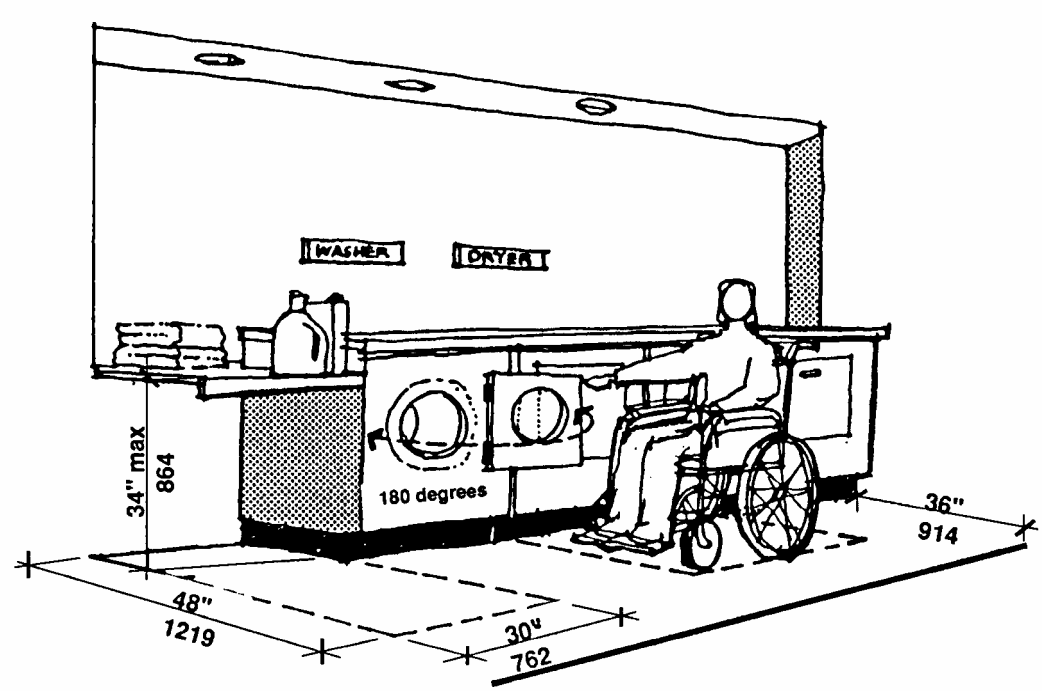

Laundry Facilities
Figure 10a

10.8.3 Where laundry work space, such as a folding table, is provided, it shall comply with **521 CMR 35.00: TABLES AND SEATING**.

10.8.4 Controls, including the payment mechanism, shall fall within the *zone of reach* as defined in **521 CMR 5.00: DEFINITIONS**.

10.00: **PUBLIC USE AND COMMON USE SPACES IN MULTIPLE DWELLINGS**

10.9 **KITCHEN FACILITIES**

Sinks, counters, and cooking facilities provided in *common use* spaces shall comply with **521 CMR 32.00: KITCHENS**.

521 CMR 11.00: **COMMERCIAL BUILDINGS**

11.1 **GENERAL**

The design of commercial *buildings* shall comply with 521 CMR, except as specified or modified in 521 CMR 11.00. Commercial *buildings* are *public buildings* as defined in 521 CMR and shall include but not be limited to: the part or parts of *buildings* where a service or product is offered to the public and into which a member of the public may enter including but not limited to: doctors', dentists', and counseling offices, chiropractors', psychologists' and psychiatrists' offices, lawyers', and accountants' offices, insurance companies, veterinarians, realtors, travel agents, as well as city and town halls and *facilities*.

11.2 **COMMERCIAL FACILITIES LOCATED IN PRIVATE RESIDENCES**

When a commercial *facility* is located in a private residence, the portion of the residence used exclusively in the operation of the commercial *facility* or that portion used both for the commercial *facility* and for residential purposes shall comply with 521 CMR

11.3 **COMMERCIAL CONDOMINIUMS**

Those spaces in commercial condominiums where the service or product is offered to the public, and those premises which a member of the public may enter shall comply with 521 CMR.

11.4 **PUBLIC TOILETS**

Wherever public toilets are provided for customers, visitors or clientele of said businesses, they are required to comply fully with **521 CMR 30.00: PUBLIC TOILETS**.

11.5 **PUBLIC TELEPHONES**

Wherever public telephones are provided for customers, visitors or clientele of said businesses, they are required to comply fully with **521 CMR 37.00: PUBLIC TELEPHONES**.

11.6 **TRANSACTION AREAS**

Transaction areas in commercial buildings shall comply with **521 CMR 7.2.2 Other transaction areas**.

11.00: **COMMERCIAL BUILDINGS**

NON-TEXT PAGE

521 CMR 12.00: EDUCATIONAL FACILITIES

12.1 GENERAL

Educational *facilities* shall comply with 521 CMR, except as specified or modified in 521 CMR 12.00. Educational *facilities* shall include but not be limited to: public and private schools, nurseries, pre-schools, day care facilities, colleges and universities, libraries, galleries, museums, and training *facilities*.

12.1.1 Applicability: Administrative spaces, instructional spaces, and areas open to students or the general public shall comply with 521 CMR.

12.1.2 Dormitories shall comply with the requirements of **521 CMR 8.00: TRANSIENT LODGING FACILITIES**.

12.1.3 Amphitheaters, lecture halls and classrooms of educational facilities shall comply with **521 CMR 14.00: PLACES OF ASSEMBLY**.

12.2 LIBRARIES

Shall comply with the following and **Figure 12a**.

12.2.1 General: All public areas of a library, including but not limited to, reading and study areas, stacks, reference rooms, reserve areas, and special *facilities* or collections, shall comply with **521 CMR 12.00.**

12.2.2 Reading Areas, Study Areas and Computer Workstations: Where tables, study carrels, computer workstations, or fixed seating are provided, at least 5% with a minimum of one of each *element* shall be *accessible*, be on an *accessible route*, and comply with the following:

a. *Access aisles*: A 36 inch (36" = 914mm) *access aisle* shall be provided between tables and between study carrels. No seating shall overlap the *access aisle*. **See Fig. 12a**.
b. *Clear floor space* as defined in **521 CMR 5.00: DEFINITIONS** shall be provided at each seating space. Such *clear floor* space shall not overlap knee space by more than 19 inches (19" = 483 mm). **See Fig. 12a**.
c. Knee Clearances: If seating for disabled persons is provided at tables or counters, kneespaces at least 27 inches (27" = 686mm) high, 30 inches (30" = 762mm) wide, and 19 inches (19" = 483mm) deep shall be provided. **See Fig. 12a**.
d. Height of Tables or Counters: The tops of *accessible* tables and counters shall be from 28 inches to 34 inches (28" to 34" = 711mm to 864mm) above the finished floor or ground.

12.00: **EDUCATIONAL FACILITIES**

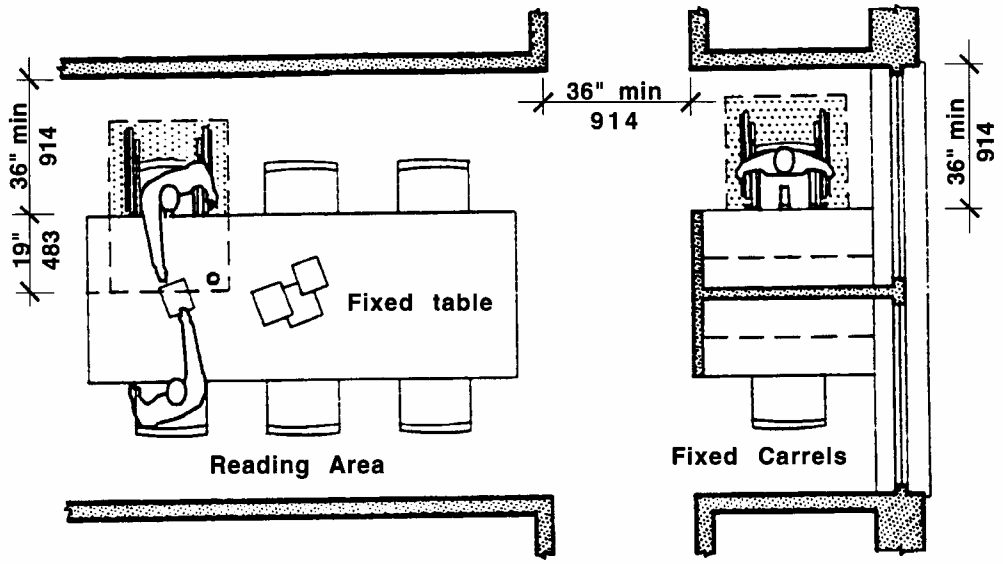

Seating in Libraries
Figure 12a

12.2.3 Check-Out Areas: At least one lane at each check-out area shall have a counter a minimum of 36 inches (36" = 914mm) in length and a maximum of 36 inches (36" = 914mm) in height. **See Fig. 7a**.

12.2.4 Security Devices: Any traffic control or book security gates or turnstiles shall not prevent access or *egress* to people in wheelchairs. Security gates shall have a 32 inch (32" = 812mm) *clear* opening. If turnstiles are used, an adjacent *accessible*, unlocked door or gate shall be provided. Any *level* changes created by such devices shall comply with **521 CMR 20.00: ACCESSIBLE ROUTE** and **521 CMR 29.00: FLOOR SURFACES**.

12.2.5 Card Catalogs: *Clear* aisle *space* at card catalogs shall be a minimum of 36 inches (36" = 914mm) and comply with **Fig. 12b**. Maximum reach height shall be between 18 inches (18" = 457mm) and 54 inches (54" = 1372mm), with a height of 48 inches (48" = 1219mm) preferred.

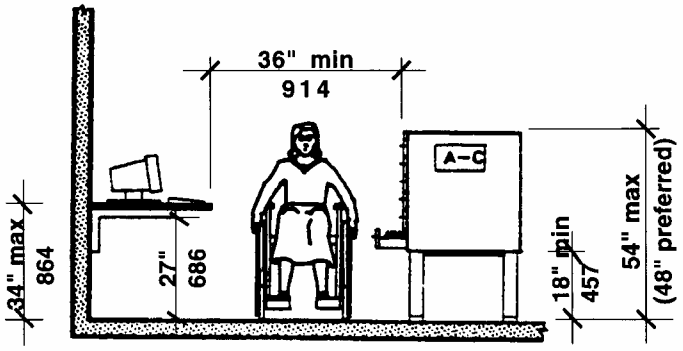

Catalogs (Card and Computer)
Figure 12b

12.00: EDUCATIONAL FACILITIES

12.2.6 Stacks: Aisles between stacks shall have a minimum *clear* width of 36 inches (36" = 914mm) and preferably 42 inches (42" = 1067mm), where possible, as shown in **Fig. 12c**. Shelf height in stack areas is unrestricted.

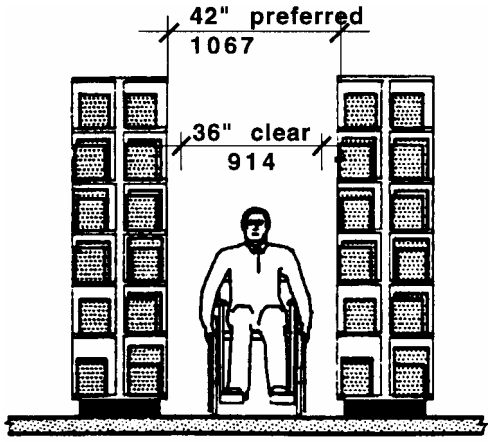

Stacks
Figure 12c

12.3 KITCHENS IN CLASSROOMS:
Kitchens in classrooms shall comply with the requirements of **521 CMR 32.00: K ITCHENS**.

12.4 SINKS, COUNTERS, AND OTHER WORK AREAS IN CLASSROOMS OR LABORATORIES
At least 5%, with a minimum of one of each type of element, in each classroom or laboratory shall comply with the following:

a. Countertops and sinks shall comply with **521 CMR 12.2.2 b, 12.2.2 c**. and **12.2.2d**.
b. Accessible storage: At least 50% of shelf space in cabinets or refrigerator/freezers shall comply with **521 CMR 6.5, Forward Reach** and **521 CMR 6.6, Side Reach** and *space* shall be designed to allow for the operation of cabinet and/or appliance doors so that all cabinets and appliances are *accessible* and usable.
c. Controls and operating mechanisms shall comply with **521 CMR 39.00: CONTROLS**.

12.5 DRINKING FOUNTAINS IN CLASSROOMS:
Shall comply with the requirements of **521 CMR 36.00: DRINKING FOUNTAINS**.

12.6 RECREATIONAL FACILITIES AT EDUCATIONAL FACILITIES shall comply with the requirements of **521 CMR 19.00: RECREATIONAL FACILITIES**

12.00: **EDUCATIONAL FACILITIES**

NON-TEXT PAGE

521 CMR 13.00: MEDICAL CARE FACILITIES

13.1 GENERAL

Medical care *facilities* shall comply with 521 CMR, except as specified or modified in **521 CMR 13.00**. Medical care *facilities* are *buildings* in which people receive physical or medical treatment or care and where persons may need assistance in responding to an emergency and where the period of stay may exceed 24 hours. They shall include but not be limited to hospitals, clinics, sanitariums, alcohol and drug detoxification centers, nursing homes, and *buildings* in which one or more doctors provide health services similar to those provided by any of the above. Doctors' and dentists' offices, counseling offices, offices of chiropractors, psychologists, and psychiatrists and places providing health services that do not require overnight accommodation shall comply with the requirements of **521 CMR 11.00: COMMERCIAL BUILDINGS**.

13.2 PUBLIC USE AND COMMON USE AREAS

All *public* and *common use* areas shall be *accessible* and shall include but are not limited to areas where services are provided to the public, waiting areas, changing rooms, diagnostic and treatment areas, exam rooms, offices and meeting rooms, food services, gift shops, and emergency facilities, and toilet rooms.

13.2.1 Where examining tables are provided in exam rooms, they shall be adjustable in height from 15 inches (381mm) above the floor.

13.2.2 Counters across which transactions are conducted with patients and the public shall comply with the following:

a. Location: The counter shall be on an *accessible* route.
b. Length: A portion of the counter or an auxiliary counter shall be at least 36 inches (36" = 914mm) in length.
c. Height: That portion of the counter shall not exceed 36 inches (36" = 914mm) above the finished floor.
d. *Clear floor space*: Shall be provided in front of counter.

13.3 PATIENT BEDROOMS

Shall comply with one or more of the following, as applicable:

13.3.1 In hospitals, general purpose hospitals, psychiatric facilities, and detoxification facilities, a total of at least 10% of the units shall be designed as follows: 5% of the patient bedrooms with toilets shall be designed as *Group 2B* Units and 5% of patient bedrooms and toilets shall be designed as *Group 1* Units.

13.3.2 Hospitals and rehabilitation facilities that specialize in treating conditions that affect mobility, or units within either that specialize in treating conditions that affect mobility, 5% of the patient bedrooms with toilets shall be designed as *Group 2B Units* and the remainder of the patient bedrooms and toilets shall be designed as *Group 1 Units*. Said rooms shall be proportionately distributed as to type of room, *i.e.* private, shared, *etc*.

13.00: MEDICAL CARE FACILITIES

13.3.3 In long term care facilities and nursing homes, 5% of the total number of patient bedrooms with toilets shall be designed as *Group 2B Units* and 45% of the patient bedrooms with toilets shall be designed as *Group 1 Units*.

13.3.4 Alterations to Patient Bedrooms: When patient bedrooms are being added or altered as part of a planned renovation of an entire wing, a department, or other discrete area of an existing medical facility, a percentage of the patient bedrooms that are being added or altered shall comply with **521 CMR 13.3.1**. The percentage of *accessible* rooms provided shall be consistent with the percentage of rooms required to be *accessible* by the applicable requirements of **521 CMR 13.3.1**, **13.3.2** and **13.3.3** until the number of *accessible* patient bedrooms in the facility equals the overall number that would be required if the facility were newly constructed.

13.4 ENTRANCES

At least one *accessible entrance* that complies with **521 CMR 25.00: ENTRANCES**, shall be protected from the weather by canopy or roof overhang. Such *entrances* shall incorporate a passenger loading zone that complies with **521 CMR 20.00: ACCESSIBLE ROUTE**.

13.5 DOORWAYS

All bedrooms and *bathrooms* shall comply with the requirements of **521 CMR 26.00: DOORS AND DOORWAYS**.

Exception: Entry doors to acute care hospital bedrooms for inpatients shall be exempted from the requirement in **521 CMR 26.6, Maneuvering Clearance** if the door opening is at least 44 inches (44" = 1118mm) wide.

13.6 MANEUVERING SPACE IN BEDROOMS

Each bedroom shall have adequate wheelchair turning space complying with **521 CMR 6.3, Wheelchair Turning Space**. In rooms with 2 beds, it is preferable that this space be located between beds. Each bedroom shall have adequate *space* to provide a minimum *clear floor space* of 36 inches (36" = 914mm) along each side of the bed and to provide an *accessible route* to each side of each bed.

13.7 PATIENT TOILET ROOMS

Where toilet rooms are provided as a part of a patient bedroom, each *accessible* patient bedroom as defined in **521 CMR 13.3, Patient Bedrooms** shall have an *accessible* toilet room that complies with requirements of **521 CMR 42.00: GROUP 1 BATHROOMS** (for *Group 1* patient bedrooms) or **521 CMR 44.00: GROUP 2B BATHROOMS**, (for *Group 2B* patient bedrooms). *Accessible bathrooms* shall be on an *accessible route*.

13.8 TUB AND SHOWER ROOMS

Where shower rooms or tub rooms are provided, at least one of each per floor must be *accessible*.

13.00: MEDICAL CARE FACILITIES

13.9 CHANGING ROOMS

Shall comply with the requirements of **521 CMR 33.00: DRESSING, FITTING AND CHANGING ROOMS**.

13.10 AUXILIARY VISUAL ALARMS

Patient bedrooms shall be equipped with one of the following:

a. A visual alarm connected to the *building* emergency alarm system; or
b. A standard 110-volt electrical receptacle into which such an alarm can be connected and a means by which a signal from the *building* emergency alarm system can trigger such an auxiliary alarm.

13.11 TELEPHONES

Telephones permanently installed in patient rooms shall have volume controls complying with **521 CMR 37.00: TELEPHONES**. An **accessible** electrical outlet within 48 inches (48" = 1219mm) of a telephone connection shall be provided to facilitate the use of an *assistive listening system*, which shall be provided by the *facility* upon request.

13.11.1 Deaf or hard of hearing patients shall be provided with a decoder and a *TTY*, on request, on a loaner basis.

13.12 TELEVISIONS

Where televisions are provided in patient bedrooms, the *facility* shall provide, upon request, a television amplifier and a closed caption decoder.

13.13 PUBLIC TOILET ROOMS

All public toilet rooms shall be *accessible*.

13.00: **MEDICAL CARE FACILITIES**

NON-TEXT PAGE

521 CMR 14.00: PLACES OF ASSEMBLY

14.1 GENERAL

Places of assembly shall comply with all parts of 521 CMR, except as specified or modified in 521 CMR 14.00. Places of assembly shall include but not be limited to theaters, auditoriums, armories, lecture halls, arenas, stadiums, banquet rooms and conference rooms. Associated, support, or related areas, including but not limited to press boxes, lobbies, ticket offices, seating, stages, backstage areas, dressing rooms, toilet rooms, showers and green rooms, shall also be *accessible*.

14.2 NUMBER OF ACCESSIBLE SEATS

Wheelchair spaces: In places of assembly with fixed seating, the minimum number of *accessible spaces* shall be computed in accordance with the following table:

Total Seating	Wheelchair Spaces
4 to 25	1
26 to 50	2
51 to 300	4
301 to 500	6
over 500	6, one additional space for each total seating capacity increase of 100.

14.2.1 Armless seats: In addition to wheelchair seating locations, 1% of all fixed seats, but not less than one seat, shall be aisle seats with no armrests on the aisle side, or shall have removable or folding armrests on the aisle side. Each such seat shall be identified by a sign or marker. *Signage* notifying patrons of the availability of such seats shall be posted at the ticket office. Aisle seats are not required to be on a *level* surface. **See Fig. 14a**.

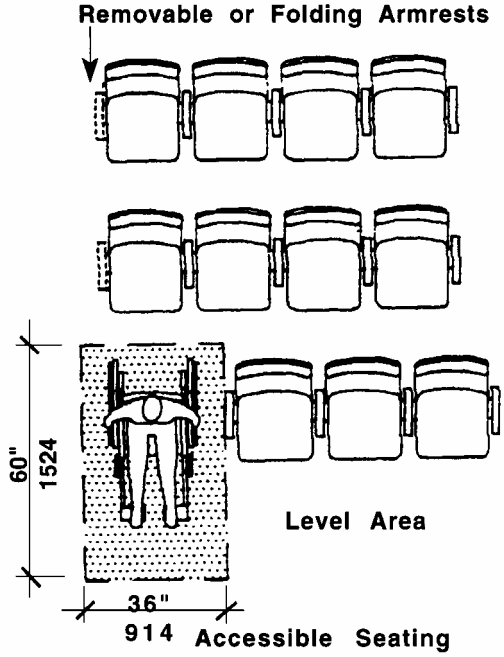

Accessible Seating
Figure 14a

14.00: PLACES OF ASSEMBLY

14.3 ACCESSIBLE SPACE

Each wheelchair *space* shall be 60 inches (60" = 1524mm) long and 36 inches (36" = 914mm) wide, shall be level, and shall comply with **521 CMR 29.00: FLOOR SURFACES**.

14.4 PLACEMENT OF WHEELCHAIR SPACES

Wheelchair *spaces* shall be an integral part of any fixed seating plan.

14.4.1 Distribution: Whenever more than 150 seats are provided, wheelchair seating locations must be provided in more than one location. Wheelchair seating locations shall be dispersed throughout all seating areas so as to provide a choice of admission prices and views comparable to those for the general public. Wheelchair seating locations shall also be provided in all areas including sky boxes and specialty areas. Where 150 or less seats are provided, wheelchair spaces may be provided in one location. In movie theaters, accessible seating locations shall not be located in the front third of the theater.

Exception: *Accessible* viewing positions may be clustered for bleachers, balconies, and other areas having sight lines that require slopes of greater than 5%. Equivalent *accessible* viewing positions may be located on levels having *accessible egress*.

14.4.2 *Accessible Route*: *Accessible* seats shall adjoin, but in no way interfere with, an *accessible route* that also serves as a *means of egress* in case of emergency.

14.4.3 Companion seats: At least one companion fixed seat or portable seat, shall be provided next to each wheelchair seating *space*, for designated used by a companion. Companion seats must be comparable to the seats for the general public, *i.e.*, comfort, cup holders, etc. Companion seats must have signage installed indicating that the seats are reserved as companion seating for the *accessible* seating areas.

14.4.4 Placement of *Accessible Seats*: Readily removable seats may be installed in wheelchair *spaces* when the *spaces* are not required to accommodate wheelchair users. *See* **Fig. 14a**.

14.5 ASSISTIVE LISTENING SYSTEMS

In *spaces* such as concert and lecture halls, playhouses, movie theaters, and meeting rooms, *assembly areas* shall comply with the following:

14.5.1 An *assembly area* shall have a permanently installed assistive listening system if:

a. the *assembly area* accommodates at least 50 persons, or
b. if it has an audio-amplification system, and fixed seating.

14.5.2 For other assembly areas, a permanently installed *assistive listening system*, or other supplementary wiring necessary to support a portable *assistive listening system* shall be provided. The minimum number of receivers to be provided shall be equal to 4% of the total number of seats, but not less than two receivers.

14.00: PLACES OF ASSEMBLY

14.5.3 Placement of Listening Systems: If the listening system serves individual fixed seats, then such seats shall be located within a 50 foot (50' = 15m) viewing distance of, and including the stage or playing area, and shall have a complete view of the stage or playing area.

14.5.4 *Signage* shall be installed to notify patrons of the availability of a listening system and shall comply with **521 CMR 41.00: SIGNAGE**.

14.6 ACCESS TO PERFORMING AREAS

Where access is provided to the stage from within the place of assembly, an *accessible route*, within the place of assembly, from the wheelchair seating locations, to the stage/performing area must be provided. *See* **Fig. 14b**. In addition, an *accessible route* that coincides with the route for performers must be provided to the backstage area.

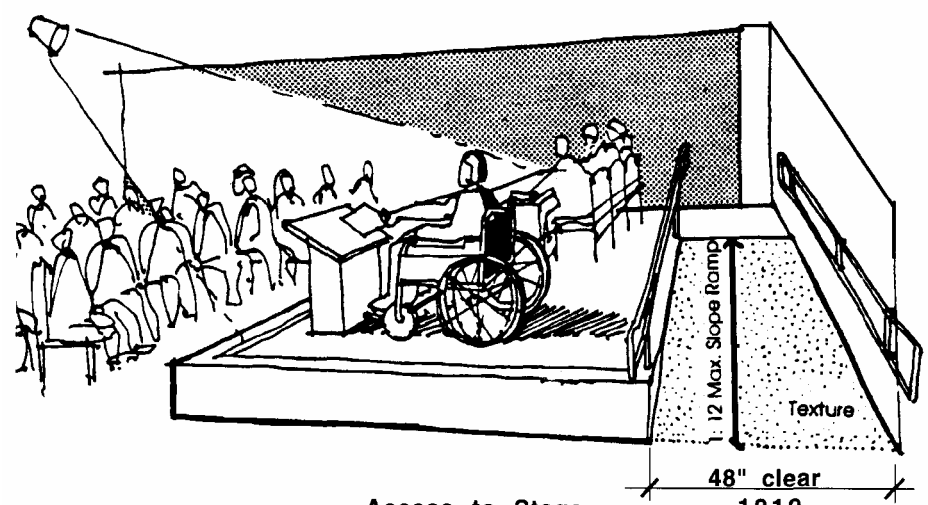

Access to Stage
Figure 14b

14.6.1 Access to the stage may be by the following:

a. a *ramp* complying with **521 CMR 24.00: RAMPS**
b. a wheelchair lift complying with **521 CMR 28.12, Wheelchair Lifts**

14.7 BOX OFFICE TICKET COUNTERS AND CONCESSION STANDS

Shall comply with the following:

a. Location: The counter shall be on an *accessible route*.
b. Length: A portion of the counter or an auxiliary counter shall be at least 36 inches (36" = 914mm) in length.
c. Height: The counter shall not exceed 36 inches (36" = 914mm) above the finish floor.
d. *Clear Floor Area*: Provide *clear floor area* as defined in **521 CMR 5.00: DEFINITIONS**.
e. Space Allowance and Reach Ranges: *See* **521 CMR 6.5, Forward Reach** and **512 CMR 6.6, Side Reach**.

14.00: **PLACES OF ASSEMBLY**

14.8 **DRESSING ROOMS**

Where provided, shall comply with **521 CMR 33.00: DRESSING, FITTING AND CHANGING ROOMS**

14.9 **SLOPE IN AUDITORIUMS/ASSEMBLY AREAS** (Reserved)

521 CMR 15.00: DETENTION FACILITIES

15.1 GENERAL

Detention *facilities* shall comply with 521 CMR, except as specified or modified in 521 CMR 15.00. Detention *facilities* shall include, but not be limited to, police stations, prisons, jails, houses of correction, juvenile detention centers, reformatories and other institutional occupancies where occupants are under some degree of restraint or restriction for security reasons.

15.2 PUBLIC AREAS

In such *facilities*, public areas, including but not limited to areas for visitation and consultation, shall be *accessible* and shall be on an *accessible route* from the *entrance* of the *facility*.

15.3 ENTRANCES

Entrances used by the general public, including those used by both visitors and inmates or detainees, including those that are secured, shall be *accessible* as required under **521 CMR 25.00: ENTRANCES**.

Exception: *Entrances*, doors and doorways designed to be operated only by security personnel shall be exempt from **521 CMR 26.2, 26.3, 26.4, 26.6, 26.7, 26.8, 26.9, and 26.11**.

15.4 SECURITY SYSTEMS

Where security systems are provided at entrances, an *accessible route* shall be provided through fixed security barriers. Where security barriers incorporate equipment such as metal detectors, fluoroscopes, or other similar devices which cannot be made *accessible*, an *accessible route* shall be provided adjacent to such security screening devices to facilitate an equivalent path of travel.

15.5 VISITING AREAS

In non-contact visiting areas where inmates or detainees are separated from visitors, the following elements, where provided, shall be accessible and located on an *accessible* route.

15.5.1 Cubicles and counters. 5% but not less than one, of fixed cubicles shall be *accessible* according to **521 CMR 17.2, Seating**, on both the visitor and detainee or inmate sides. Where counters are provided, a portion at least 36 inches (36" = 914mm) in length shall be provided on both visitor and detainee or inmate side.

15.6 INMATE AREAS

Program, dining, work, and recreational *facilities* and all areas open to inmates, detainees, or visitors shall be *accessible* and on an *accessible route*.

15.7 HOLDING CELLS AND GENERAL HOUSING CELLS OR ROOMS

Minimum number: At least 3%, but not less than one, of the total number of housing or holding cells or rooms provided in the *facility*, shall be *accessible*.

15.00: DETENTION FACILITIES

15.7.1 Dispersion: *Accessible* cells or rooms shall be dispersed among all categories and types of general housing and holding areas.

15.7.2 Special hold or housing cells: In addition to the requirements of **521 CMR 15.6, Inmate Areas** where special holding or housing cells or rooms are provided, at least one serving each purpose shall comply. An *accessible* special holding or housing cell or room may serve more than one purpose. Cells or rooms subject to this requirement include, but are not limited to, those used for purposes of protective custody, disciplinary detention, detoxification, and medical isolation.

15.7.3 Beds: Beds shall have maneuvering space of at least 36 (36"= 914mm) wide along one side. Where more than one bed is provided in a room or cell, the maneuvering space provided at adjacent beds may overlap.

15.8 **INMATE TOILETS**:
Where provided within the *accessible* cells or rooms, the *bathrooms* shall comply with **521 CMR 30.00: PUBLIC TOILET ROOMS**.

Exception: **521 CMR 30.8 GRAB BARS** does not apply.

15.8.1 Inmate toilet and bathing *facilities*: At least one toilet room and bathing room shall be fully *accessible* and on an *accessible route* from the *accessible* cells or holding rooms.

15.9 **ACCESSIBLE CELLS OR ROOMS FOR PERSONS WHO ARE DEAF OR HARD OF HEARING**
In addition to the requirements of **521 CMR 15.6, Inmate Areas** at least 3% but not less than one, of general housing or holding cells or rooms equipped with audible emergency warning systems or permanently installed telephones shall comply with 521 CMR.

Exception: Visible alarms are not required where inmates or detainees are not allowed independent *means of egress*.

15.10 **DRINKING FOUNTAINS**:
Shall comply with the requirements of **521 CMR 36.00: DRINKING FOUNTAINS**.

521 CMR 16.00: HOUSES OF WORSHIP

16.1 GENERAL

Houses of worship shall comply with 521 CMR, except as specified or modified in 521 CMR 16.00. Houses of worship include but are not limited to churches, chapels, temples, synagogues and mosques. *Spaces* that must be accessible include those areas open to the congregation, administrative offices, and religious meeting halls and classrooms.

Exception: Day care centers located in houses of worship are educational facilities and shall comply with **521 CMR 12.00: EDUCATIONAL FACILITIES**.

16.2 NUMBER OF ACCESSIBLE SEATS

Shall comply with the following:

16.2.1 Wheelchair *spaces*: In houses of worship with fixed seating, the minimum number of *accessible spaces* shall be computed in accordance with the following table.

Total Seating	Wheelchair Spaces
4 to 25	1
26 to 50	2
51 to 300	4
301 to 500	6
over 500	6, plus 1 additional space for each seating capacity increase of 100

16.3 ACCESSIBLE SPACE

Each wheelchair *space* shall be 60 inches (60" = 1524mm) long and 36 inches (36" = 914mm) wide, shall be *level*, and shall comply with **521 CMR 29.00: FLOOR SURFACES**. **See Fig. 16a**.

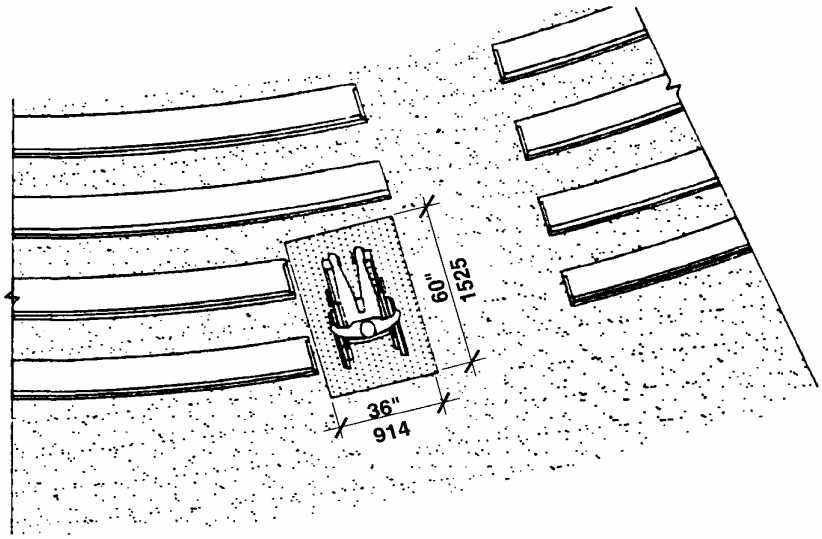

Wheelchair Seating Spaces
Figure 16a

16.00: HOUSES OF WORSHIP

16.4 PLACEMENT OF WHEELCHAIR SPACES

Wheelchair *spaces* shall be an integral part of any fixed seating plan.

16.4.1 Distribution: Wheelchair spaces shall be proportionally distributed to provide people with physical disabilities a choice of lines of sight comparable to those for members of the general public.

16.4.2 *Accessible Route*: Wheelchair *spaces* shall adjoin, but in no way interfere with, an *accessible route* that also serves as a *means of egress* in case of emergency.

16.4.3 Companion seats: At least one companion fixed seat shall be provided next to each wheelchair seating area.

16.4.4 Removable seats or pews: Readily removable seats or sections of pews may be installed in wheelchair *spaces* when the spaces are not required to accommodate wheelchair users.

16.5 ASSISTIVE LISTENING SYSTEMS

Where audible communication is integral to the *use* of the *space*, the *space* shall comply with the following:

16.5.1 An *assembly* area shall have a permanently installed *assistive listening system* if:

a. the *assembly* area accommodates at least 50 persons, has an audio-amplification system; and
b. it has fixed seating.

16.5.2 For other *assembly* areas, a permanently installed *assistive listening system*, or a portable listening system and an adequate number of electrical outlets or other supplementary wiring necessary to support a portable assistive listening system, shall be provided. The minimum number of receivers to be provided shall be equal to 4% of the total number of seats, but in no case less than two receivers.

16.5.3 Placement of *Assistive Listening Systems*: If the *assistive listening system* serves individual fixed seats, then such seats shall be located within a 50 foot (50' = 15m) viewing distance of the speaker's podium and shall have a complete view of the podium. The *assistive listening system* should serve all participants whether seated in balconies, among the general audience or upon the altar and the podium areas.

16.5.4 *Signage* shall be installed to notify patrons of the availability of a listening system and shall comply with **521 CMR 41.00: SIGNAGE**.

16.00: **HOUSES OF WORSHIP**

NON-TEXT PAGE

521 CMR 17.00: **RESTAURANTS**

17.1 GENERAL

Restaurants shall comply with 521 CMR, except as specified or modified in **521 CMR 17.00**. Restaurants shall include, but not be limited to, cafeterias, lounges, bars, and other places open to the public where food or beverages are served.

17.2 SEATING

At least 5% but not less than one, of the tables shall be *accessible*, be on an *accessible route*, and in compliance with the following:

17.2.1 Distribution: *Accessible* tables shall be distributed by size and location throughout the *space* or *facility*. In establishments where separate areas are designated for smoking and non-smoking patrons, the required number of *accessible* tables shall be proportionally distributed between the smoking and non-smoking areas.

17.2.2 A 36 inch (36" = 914mm) *access aisle* shall be provided between all *accessible* tables. No seating shall overlap the *access aisle*. **See Fig. 17a**.

17.2.3 *Clear floor space* as defined in **521 CMR 5.00: DEFINITIONS** shall be provided at each seating space. Such *clear floor space* shall not overlap knee space by more than 19 inches (19" = 483mm). **See Fig. 17a**.

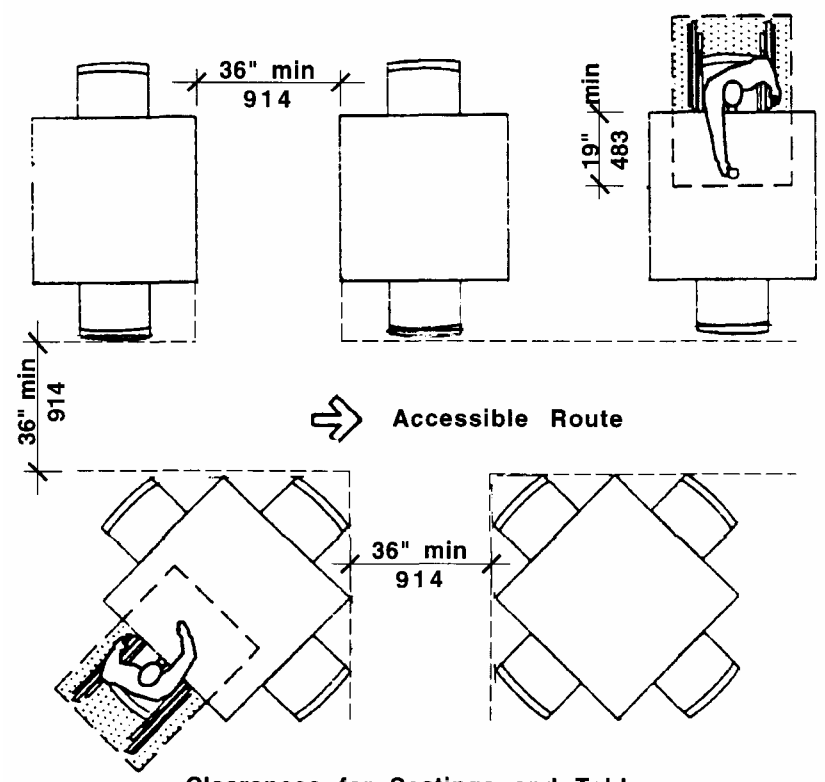

Clearances for Seatings and Tables
Figure 17a

17.00: RESTAURANTS

17.2.4 Knee Clearances: If seating for people in wheelchairs is provided at tables or counters, knee spaces at least 27 inches (27" = 686mm) high, 30 inches (30" = 762mm) wide, and 19 inches (19" = 483mm) deep shall be provided. **See Fig. 17b**.

17.2.5 Height of Tables or Counters: The tops of *accessible* tables and counters shall be from 28 inches to 34 inches (28" to 34" = 711mm to 864mm) above the finish floor or ground. **See Fig 17b**.

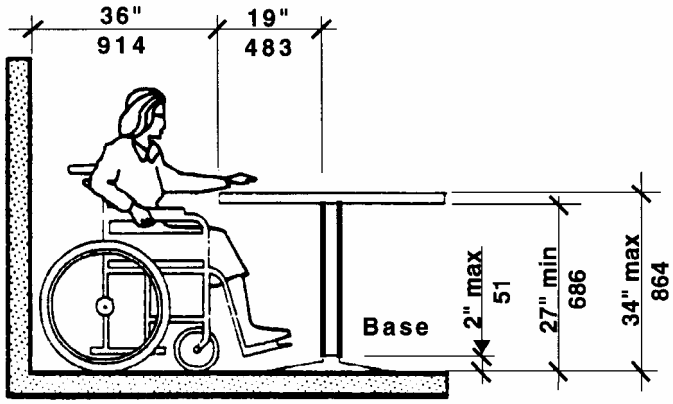

Table Heights and Clearances
Figure 17b

17.3 DINING COUNTERS WITHOUT SERVICE

At counters where food is consumed but there is no service, a 60 inch (60" = 1524mm) portion of the dining counter shall be *accessible*, on an *accessible route*, and in compliance with **521 CMR 17.2.5**

17.4 COUNTERS AND BARS WITH SERVICE

At counters exceeding 34 inches (34" = 864mm) in height, where food or drink is served for consumption by customers seated on stools or standing at the counter, a portion of the main counter shall be *accessible* or service shall be available at *accessible* tables within the same area. The *accessible* portion shall be a minimum of 60 inches (60" = 1524mm) in length and comply with **521 CMR 17.2.4 and 17.2.5**.

17.5 DINING AREAS

All dining areas, including raised or sunken dining areas, *mezzanines*, loggias, and outdoor seating areas, shall be *accessible*.

17.6 FOOD SERVICE LINES

Food service lines, including but not limited to: cafeterias, buffet tables and salad bars, shall comply with the following:

17.6.1 *Clear* Width: Food selection aisles, including *entrance* and exit, shall have a minimum *clear* width of 36 inches (36" = 914mm), with a preferred *clear* width of 42 inches (42" = 1067mm) to allow passage by other customers around a person using a wheelchair. **See Fig. 17c**.

17.00: **RESTAURANTS**

17.6.2 Tray slides shall be mounted no higher than 34 inches (34 " = 864mm) above the floor. **See Fig. 17c**.

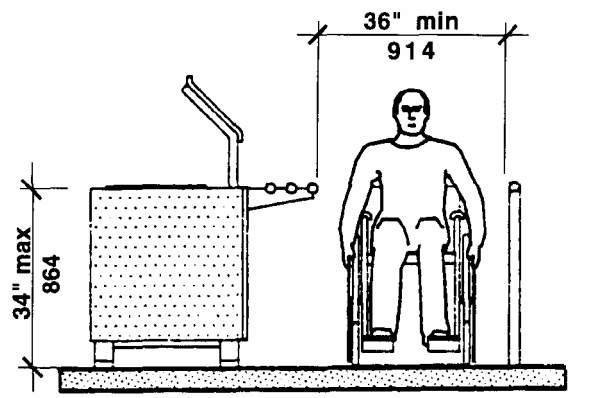

Food Service Line
Figure 17c

17.6.3 If self-service shelves are provided, at least 50% of each type must be within the *zone of reach* defined in **521 CMR 5.00: DEFINITIONS**.

17.7 TABLEWARE AND CONDIMENT AREAS

Self-service shelves and dispensing devices for tableware, dishware, condiments, food and beverages shall be installed to comply with *zone of reach* as defined in **521 CMR 5.00: DEFINITIONS**. **See Fig. 17d**.

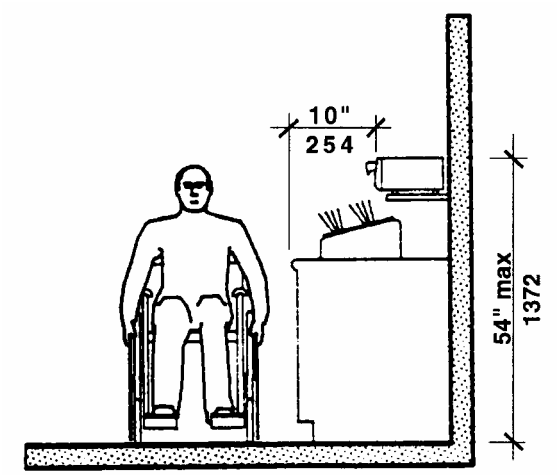

Food Service Line - Reach Range
Figure 17d

17.8 RAISED PLATFORMS

Where a head table or speaker's lectern is located on a raised platform, the platform shall be *accessible* in compliance with **521 CMR 24.00: RAMPS**, or **521 CMR 28.00: ELEVATORS**. Open edges of a raised platform shall be protected by a curb or by placement of tables.

17.00: **RESTAURANTS**

17.9 VENDING MACHINES AND OTHER EQUIPMENT

Spaces for vending machines and other equipment shall be located on an *accessible route* and shall comply with *zone of reach* as defined in **521 CMR 5.00: DEFINITIONS**.

17.10 CASH REGISTER

Where payment is made at a cash register, the counter shall be no higher than 36 inches (36" = 914mm) from the floor to the top of the counter. **See Fig. 17e**.

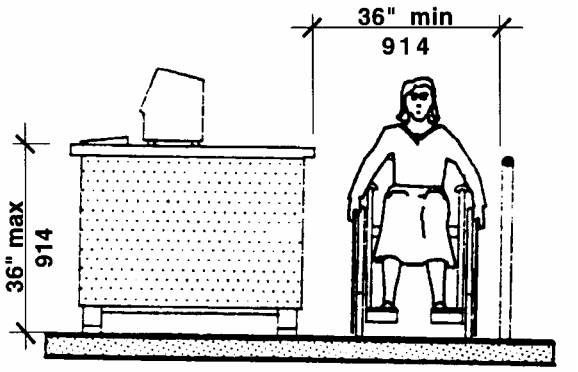

Check-Out Lane
Figure 17e

17.11 TELEVISIONS

Where televisions are provided in restaurants, the television shall be equipped with a closed caption decoder.

17.00: **RESTAURANTS**

NON-TEXT PAGE

521 CMR 18.00: **TRANSPORTATION TERMINALS**

18.1 GENERAL

Transportation terminals shall comply with 521 CMR, except as specified or modified in 521 CMR 18.00. Transportation terminals shall include but not be limited to airports, bus and train stations, marine terminals, subway stops, *commuter rail*, *light rail*, and *rapid rail* transit stations.

18.2 ACCESSIBLE ROUTE

At all newly *constructed*, *reconstructed*, *altered* or *remodeled* stations, an *accessible route* shall connect all terminal *buildings* or station houses, platforms, parking areas and street *entrances*.

18.3 ENTRANCES

At least 50% of the *entrances* to a transportation terminal shall be *accessible*.

18.4 PLATFORM ACCESS

To facilitate access to subway cars, airplanes, buses, trains, and other means of public transportation, platforms shall comply with the following:

18.4.1 Platform to Vehicle Gaps: At newly *constructed*, *reconstructed*, *altered*, or *remodeled* stations, the distance between platform and vehicle at boarding platforms shall not exceed three inches (3" = 76mm) in the horizontal plane and ½ an inch (½" = 13mm) in the vertical plane. Where *construction* constraints result in platform to vehicle gaps that exceed these requirements, a bridge plate designed to eliminate such gaps shall be made available at every door of the vehicle where passengers are boarding or disembarking. Where construction constraints in *light rail* stations result in platform to vehicle gaps that exceed the requirements a device used to bridge the gap must be a minimum of 36 inches wide or the width of the opening, whichever is greater and the slope shall not exceed 1:12. Exception: a slope between 1:10 (10%) and 1:12 (8.3%) is allowed for a single rise of a maximum of three inches (3" = 76mm).

18.4.2 Platform Warnings: Platform edges at newly *constructed*, *reconstructed*, *altered*, or *remodeled* stations shall have a yellow (Federal Yellow 33538) band of *detectable warning* at least 24 inches (24" = 610mm) in width except where there is no defined platform edge, the warnings shall be placed far enough from the tracks to allow for the dynamic envelope of vehicles using tracks at those terminals. **See Fig 18a**.

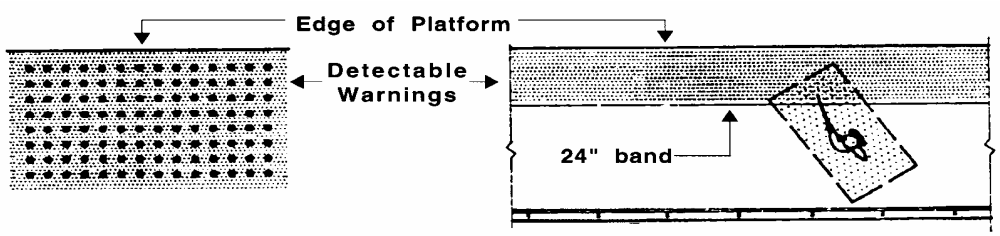

Detectable Warnings
Figure 18a

18.00: **TRANSPORTATION TERMINALS**

a. *Detectable warnings* shall consist of raised truncated domes with a base diameter of nominal 0.9 inches (0.9" = 23mm), a height of nominal 0.2 inches (0.2" = 5mm) and a center-to-center spacing between domes which are farthest apart in a configuration, of nominal 2.35 inches (2.35" = 60mm) and shall contrast visually with adjoining surfaces, by a minimum of 40%.
b. The material used to provide contrast shall be an integral part of the walking surface.
c. *Detectable warnings* used on interior surfaces shall differ from adjoining walking surfaces in resiliency or sound-on-cane contact.

18.5 COMMUTER, LIGHT RAIL AND RAPID RAIL TRANSIT TERMINALS

To facilitate access to *commuter, light rail*, and *rapid rail* transit vehicles, the following shall be provided:

18.5.1 Platforms at new stations: At newly *constructed* stations serving *commuter rail* coaches, access shall be provided to all passengers and to all coaches of the train by means of a full length raised platform. For purposes of 521 CMR 18, a newly *constructed* station is defined as any station stop where passenger services has not heretofore been provided or where no regularly scheduled passenger service has been provided for five or more years. **See Fig. 18b**.

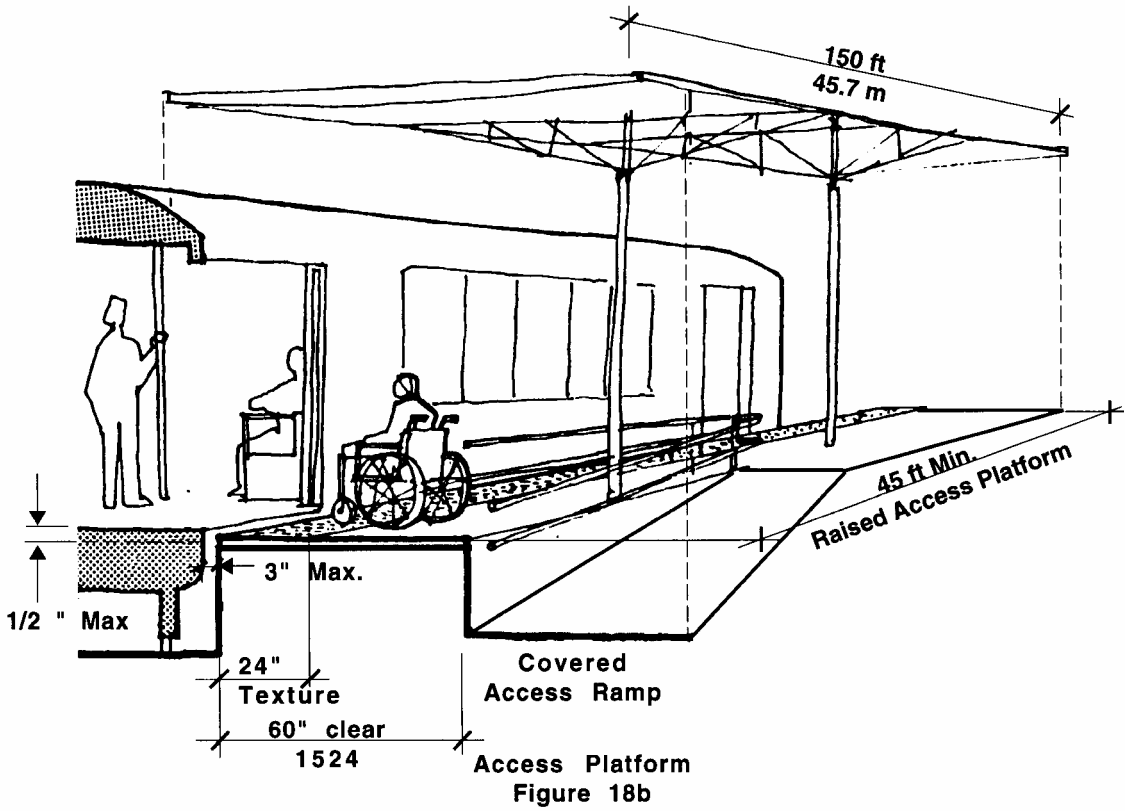

Figure 18b

a. Such platforms shall be at least 60 inches (60"=1524mm) in *clear* width
b. Such platforms shall provide overhead shelter from rain and snow along a total of at least 150 feet (150' = 46m) of their length and at all access *ramps*.

18.00: **TRANSPORTATION TERMINALS**

18.5.2 Platforms at *reconstructed* stations: Any *reconstructed, altered* or *remodeled* stations serving *commuter rail* coaches shall afford access to at least two coaches of a train by means of a raised platform. Said platform shall comply with the following:

a. Such platforms shall be at least 60 inches (60" = 1524mm) in *clear* width.
b. Such platforms shall be at least 45 feet (45' = 14m) in length and shall, along their full length and at all access *ramps*, provide overhead shelter from rain and snow.

18.5.3 *Light Rail* Transit Terminals: To facilitate access to *light rail* transit vehicles, the following shall be provided:

18.5.3.1 Platforms at newly *constructed* stations serving *light rail* transit vehicles shall provide access to all passengers and to all coaches of the train by means of a full length raised platform. Such platforms shall be at least 60 inches (60" = 1524mm) to *clear* width at the stopping zone for *accessible* doors. A minimum of 36 inches (36" = 914mm) in *clear* width must be provided to each stopping zone for *accessible* doors.

18.5.3.2 Platforms at *reconstructed, remodeled or altered* stations serving *light rail* transit vehicles shall afford *access* to at least one car by means of a raised platform. Said platform shall comply with the following:

a. Such platforms shall be at least 60 inches (60" = 1524mm) in clear width at the stopping zone for *accessible* doors. A minimum 36 inch (36" = 914mm) clear width must be provided to each stopping zone for *accessible* doors.
b. Such platforms shall be at least eight feet (8' = 2438mm) in length.

18.6 FARE TRANSACTION

At least one fare transaction area of each type, at each accessible entrance shall be *accessible* and shall have a minimum 36 inch (36" = 914mm) wide path of travel. Where transaction counters are provided, they shall comply with the requirements set forth in 521 CMR 7.2.1a., b., c., and d. Where provided, coin or card slots shall comply with **521 CMR 6.5 Forward Reach** or **521 CMR 6.6 Side Reach**.

18.7 ENTRY/EXIT GATE

At least one entry and one exit gate shall be *accessible* and shall have a *clear* opening of not less than 32 inches (32" = 813mm) wide. If one gate serves as both entry/exit, it shall have a *clear* opening of not less than 32 inches (32" = 813mm) wide.

18.8 HAZARDOUS VEHICULAR AREAS

Detectable warnings shall be provided where a *walk* crosses or adjoins a *vehicular way* and the pedestrian and vehicular areas are not separated by curbs, railings, or other *elements*. The boundary between the areas shall be defined by a continuous *detectable warning* which is 24 inches (24" = 610mm) wide, complying with **521 CMR 18.4.2(a), (b)**, and **(c)**.

18.00: **TRANSPORTATION TERMINALS**

18.9 SEATING

Within the terminal there shall be seating at intervals not to exceed 200 feet (200' = 61m).

18.10 AT GRADE CROSSINGS

Where public *sidewalks* cross rail systems at grade, the surface of the continuous passage shall be level and flush with the rail top at the outer edge and between the rails. The horizontal gap on the inner edge of each rail shall be the minimum necessary to allow passage of wheel flanges and shall not exceed 2½ inches (2½" = 64mm). Where tracks cross a *sidewalk*, 24 inch (24" = 610mm) wide *detectable warnings* complying with **521 CMR 18.4.2a** shall be placed on both sides of the tracks across the entire width of the *sidewalk*, at a sufficient distance from the tracks to allow clearance for the widest vehicle using those tracks. Where multiple tracks are part of the same level crossing, *detectable warnings* should be placed alongside the outermost track, and not within the sets of tracks.

18.11 ANNOUNCEMENTS IN SEATING AND PLATFORM AREAS

Visual systems for providing announcement to deaf and hard of hearing customers shall be provided wherever there are auditory systems for providing announcements.

18.12 TIER I MARINE FACILITIES

Tier I marine facilities are docks and/or piers that service scheduled waterborne passenger vessels with a vessel length of 40 feet (40' = 12m) or greater. These *facilities* shall provide persons with disabilities *unassisted access* measured under nominal marine conditions throughout spring tide range or 9½ feet (9.5' = 2996mm) whichever is less. *Tier I marine facilities* shall comply with the following:

18.12.1 *Unassisted Access* between the land or fixed facility and a floating vessel, with or without an intervening floating structure, shall be provided.

18.13 MARINE RAMPS

shall comply with the following:

18.13.1 Handrails: *Marine ramps* shall be equipped with handrails which comply with **521 CMR 24.5 Handrails**.

Exception: At the top and bottom of the *marine ramp*, the upper and lower rails shall be connected with a circular return extending a minimum of 12 inches (12" = 305mm) beyond the edge of the *ramp*. It is not intended that handrail extensions be horizontal during all tidal or weather conditions.

18.13.2 Width: The *clear* width of the *marine ramp* shall be a minimum of 36 inches (36" = 914mm) measured between the handrails.

18.00: **TRANSPORTATION TERMINALS**

18.13.3 Platforms: *Marine ramps* shall terminate in *level* platforms that are a minimum of 48 inches (48"= 1219mm) by 48 inches (48" = 1219mm), *clear* and unobstructed by handrails, door swings, *entrances*, or other projections. Such platforms shall occur at the top and bottom of each *ramp* and at intervals not exceeding the maximum *ramp* length as described in Table 1:

Table 1

RAMPS	MAXIMUM RAMP LENGTH (excluding transition plates)
1:12 but less than 1:14	Not to exceed 30 feet (9m)
1:14 but less than 1:16	Not to exceed 35 feet (11m)
1:16 but less than 1:18	Not to exceed 40 feet (12m)
1:18 but less than 1:20	Not to exceed 45 feet (14m)
1:20 and over	Unlimited length

18.13.4 *Transition Plates* shall be a maximum of eight feet (8' = 2438mm) in length and shall have slopes less than or equal to 1:12. *Transition plates* longer than 18 inches (18" = 457mm) shall be equipped with handrails complying with **521 CMR 18.11.1**. These handrails must be parallel to the handrails on the *marine ramp(s)*, but may not necessarily be continuous with them. *Transition plates* shall be at least as wide as the *ramp*. The change in level between the end of the *transition plate* and the adjoining *level* surface shall be no greater than ½ an inch (½" = 13mm).

18.14 BRIDGE PLATES

Vessels using *bridge plates* at boarding and disembarking areas, access shall comply with the following:

18.14.1 A maximum slope of 1:8 to 1:10 is allowed for a maximum rise of three inches (3" = 76mm). A maximum slope that is less steep than 1:10 and no steeper than 1:12 is allowed for a maximum rise of six inches (6" = 152mm).

18.14.2 *Bridge Plates* shall have a minimum *clear* width of at least 36 inches (36" = 914mm).

18.14.3 *Bridge Plates* longer than six feet (6' = 1829mm) are *marine ramps* and shall comply with **521 CMR 18.13, Marine Ramps**.

18.15 FLOATING AND FIXED DOCKS

The edge of all floating and fixed docks shall provide at least one of the following:

a. Handrails that comply with **521 CMR 24.5, Handrails**;
b. Curbs that are at least four inches (4" = 102mm) high and are preceded by *detectable warnings* that comply with 521 CMR; or
c. *Detectable warnings* that comply with 521 CMR.

18.00: **TRANSPORTATION TERMINALS**

18.16 ACCESSIBLE ROUTE

There shall be an *accessible route* to and throughout the *marine facility* that connects the vessels boarding area with all other areas and services available to the public within the *marine facility*. The *accessible route* shall comply with **521 CMR 20.00: ACCESSIBLE ROUTE**.

18.17 ANCILLARY FACILITIES

Where provided within the *marine facility*, ancillary *facilities* such are fare transaction areas, public toilets, public telephones, vendor(s) stands, etc., shall comply with 521 CMR.

18.00: **TRANSPORTATION TERMINALS**

18.18 MARINE FACILITIES THAT SERVICE WATERBORNE PASSENGER VESSELS WITH A VESSEL LENGTH OF LESS THAN 40 FEET (40' = 12m) - Reserved

18.19 OTHER TIER(S) MARINE FACILITIES - Reserved

521 CMR 19.00: **RECREATIONAL FACILITIES**

19.1 GENERAL

Recreational *facilities* shall comply with 521 CMR, except as specified or modified in 521 CMR 19.00. Recreational *facilities* shall include but not be limited to courts, rinks, swimming pools, gymnasiums, stadiums, health and sports clubs, radio control facilities, whirlpools, jacuzzis, gyms, weightlifting areas, playgrounds, zoos, fairgrounds, beaches, piers, docks, bandstands, gazebos, parks, bowling alleys, picnic areas, video arcades and campsites. All areas open to and used by the public, including but not limited to locker rooms, shower *facilities*, saunas, steam rooms, suntanning rooms, weight rooms, aerobics and dance rooms, tennis, racquet and squash courts and spectator areas in recreation *facilities* shall be *accessible*.

19.2 WATER FACILITIES

Swimming pools, lap pools, wading pools, diving pools used for scuba or general swimming, and whirlpools and jacuzzis in all locations subject to 521 CMR shall be *accessible* .

19.2.1 Access Devices: *Accessibility* to water *facilities* shall be by means of any of the following:

a. A 34 inch (34" = 864mm) wide *ramp* with a slip resistant surface extending into the shallow end of the pool. Such *ramps* shall have a slope not exceeding one-in-six (1:6), and shall have handrails on both sides. **See Fig. 19a**.

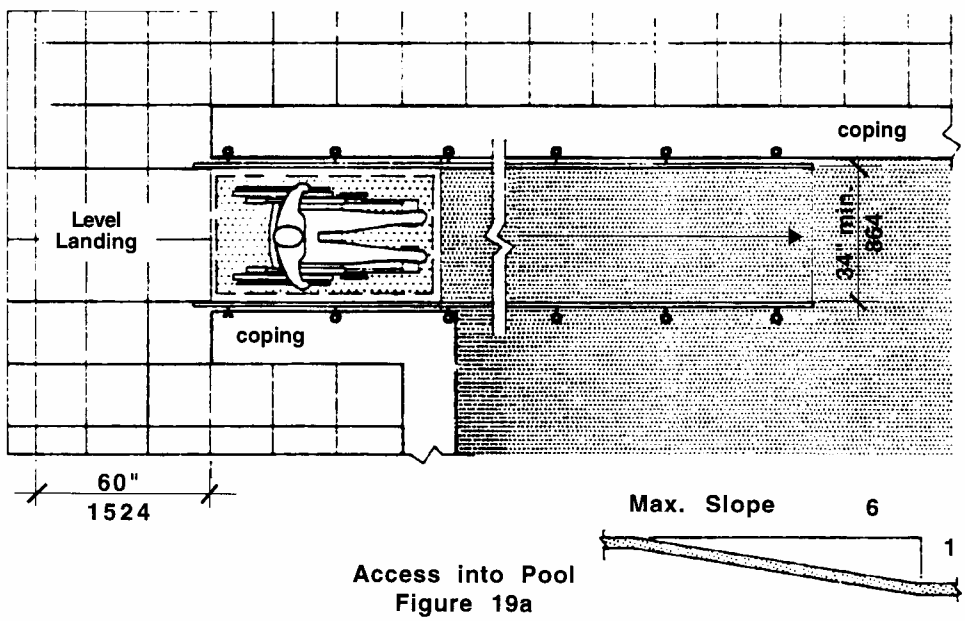

Access into Pool
Figure 19a

b. A lifting device.
c. When the water level of the pool is above the level of the path of travel, a raised coping may be utilized as a transfer area, if it is 18 inches (18" = 457mm) above the path of travel and is a minimum of 18 inches wide (18" = 457mm). **See Fig. 19b**.

19.00: **RECREATIONAL FACILITIES**

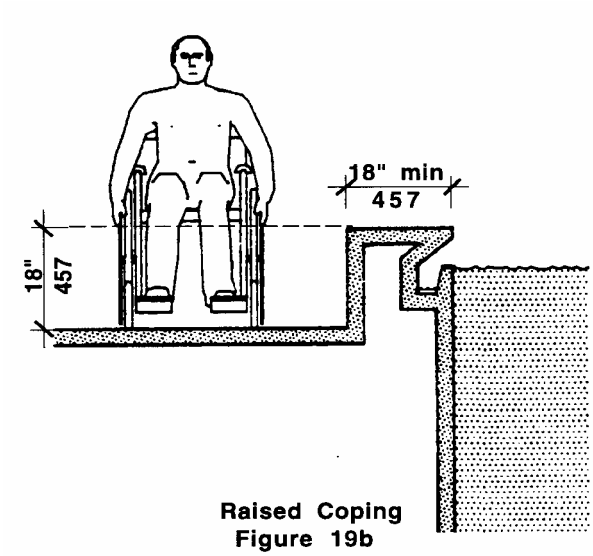

Raised Coping
Figure 19b

19.2.2 Path of travel: There shall be an *accessible route* not less than 48 inches (48" = 1219mm) wide around such pools. These paths shall have a surface that is slip resistant.

19.3 BOWLING ALLEYS

Shall provide an *accessible route* to at least two adjacent lanes.

19.4 LOCKER ROOMS

Shall have a 36 inch (36" = 914mm) wide *accessible route* around all lockers.

19.4.1 Lockers: At least 5% of the lockers, but not less than one, shall be *accessible* and shall have locking/opening devices that are operable with a closed fist and mounted no higher than 42 inches (42" = 1067mm) from the floor.

19.4.2 Seating: If benches are provided, there shall be a 36 inch (36" = 914mm) wide aisle between benches and lockers and a five foot turning diameter near the *accessible* lockers. **See Fig. 19c**.

19.00: **RECREATIONAL FACILITIES**

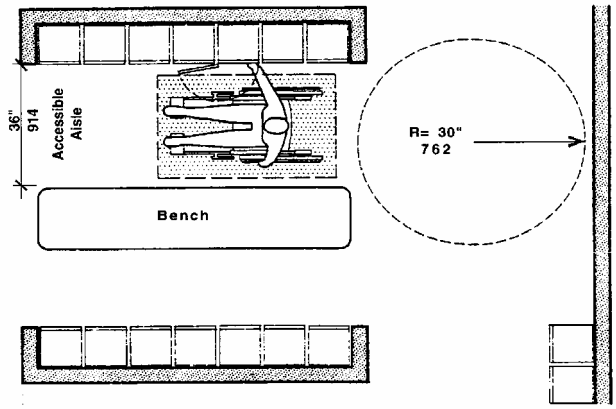

Locker Facilities
Figure 19c

19.5 CAMPSITES

Shall comply with the following:

19.5.1 Campsite Access: At least 5% of campsites shall be *accessible* and dispersed among those campsites that could be reached from an *accessible route*. Areas leading into such *sites* should be paved or hard packed.

19.5.2 Tables: At least 5% of tables shall be *accessible* . Tables for the *accessible sites* shall provide *clear space* under the table top not less than 30 inches wide (30" = 762mm) and 19 inches (19" = 483mm) deep per seating space and not less than 27 inches (27" = 686mm) *clear* from the ground to the underside of the table. **See Fig. 19d**.

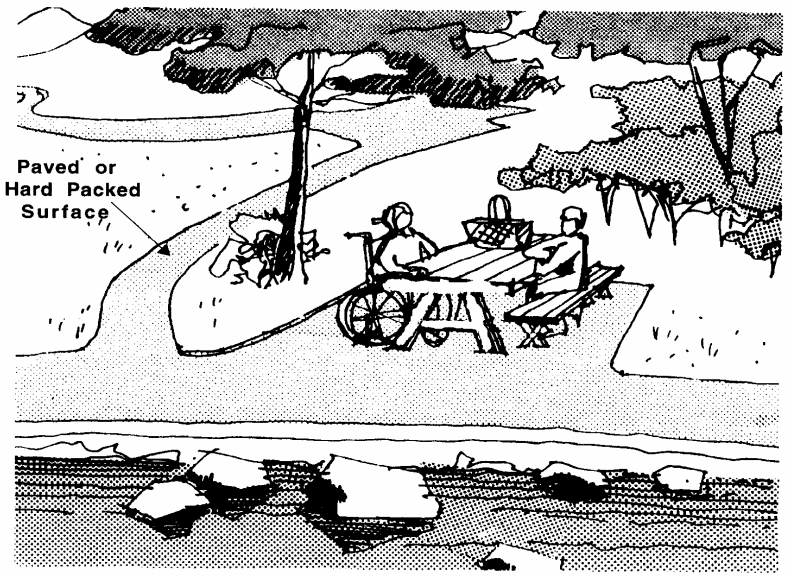

Picnic Area
Figure 19d

19.00: **RECREATIONAL FACILITIES**

19.5.3 Public restrooms and shower *facilities*, where provided, shall comply with **521 CMR 30.00: PUBLIC TOILET ROOMS** and **521 CMR 31.00: BATHING ROOMS**.

19.6 PICNIC AREAS AND HIGHWAY REST AREAS
Shall comply with the following:

19.6.1 Access: All *facilities* shall be *accessible* and shall be on an *accessible route* that is paved or hard packed. If *curb cuts* are provided, they shall comply with **521 CMR 21.00: CURB CUTS**.

19.6.2 Tables: At least 5% of tables, where provided shall be *accessible* and shall comply with **521 CMR 19.5.2.**

19.6.3 Public restrooms, where provided, shall comply with **521 CMR 30.00: PUBLIC TOILET ROOMS** and **521 CMR 31.00: BATHING ROOMS**.

19.6.4 Public telephones, where provided, shall comply with **521 CMR 37.00: PUBLIC TELEPHONES**.

19.7 PLAYGROUNDS
An *accessible route*, complying with **521 CMR 20.00: ACCESSIBLE ROUTE** shall be provided to reach playground equipment and around the playground.

19.8 MARINE FACILITIES:
Marine facilities are docks and/or piers that service waterborne passenger vessels with a vessel length of 40 feet (40' = 12m) or greater. These *facilities* shall provide persons with disabilities unassisted access measured under nominal marine conditions throughout spring tide range or 9½ feet (9½' = 2996mm) whichever is less. Marine *facilities* shall comply with the following:

19.8.1 *Unassisted Access* between the land or fixed *facility* and a floating vessel, with or without an intervening floating structure, shall be provided.

19.9 MARINE RAMPS
shall comply with the following:

19.9.1 Handrails: *Marine ramps* shall be equipped with handrails which comply with **521 CMR 24.5 Handrails**.

Exception: At the top and bottom of the *marine ramp* the upper and lower rails shall be connected with a circular return extending a minimum of 12 inches (12" = 305mm) beyond the edge of the *ramp*. It is not intended that handrail extensions be horizontal during all tidal or weather conditions.

19.00: **RECREATIONAL FACILITIES**

19.9.2 Width: The *clear* width of the *marine ramp* shall be a minimum of 36 inches (36" = 914mm) measured between the handrails.

19.9.3 Platforms: *Marine ramps* shall terminate in level platforms that are a minimum of 48 inches (48"= 1219mm) by 48 inches (48" = 1219mm), *clear* and unobstructed by handrails, door swings, *entrances*, or other projections. Such platforms shall occur at the top and bottom of each *ramp* and at intervals not exceeding the maximum *ramp* length as described in Table 1:

Table 1

RAMPS	MAXIMUM RAMP LENGTH (excluding transition plates)
1:12 but less than 1:14	Not to exceed 30 feet (9m)
1:14 but less than 1:16	Not to exceed 35 feet (11m)
1:16 but less than 1:18	Not to exceed 40 feet (12m)
1:18 but less than 1:20	Not to exceed 45 feet (14m)
1:20 and over	Unlimited length

19.9.4 *Transition Plates* shall be a maximum of eight feet (8' = 2438mm) in length and shall have slopes less than or equal to 1:12. *Transition plates* longer than 18 inches (18" = 457mm) shall be equipped with handrails complying with **521 CMR 19.9.1**. These handrails must be parallel to the handrails on the *marine ramp(s*), but may not necessarily be continuous with them. *Transition plates* shall be at least as wide as the *ramp*. The change in level between the end of the *transition plate* and the adjoining level surface shall be no greater than ½ an inch (½" = 13mm).

19.10 BRIDGE PLATES

Vessels using *bridge plates* to provide access at boarding and disembarking areas shall comply with the following:

19.10.1 A maximum slope of 1:8 to 1:10 is allowed for a maximum rise of three inches (3" = 76mm). A maximum slope that is less steep than 1:10 and no steeper than 1:12 is allowed for a maximum rise of six inches (6" = 152mm).

19.10.2 *Bridge plates* shall have a minimum clear width of at least 36 inches (36" = 914mm).

19.10.3 *Bridge Plates* longer than six feet (6' = 1829mm) are marine *ramps* and shall comply with **521 CMR 19.9, Marine Ramps**.

19.11 FLOATING AND FIXED DOCKS

The edge of all floating and fixed docks shall provide at least one of the following:

a. Handrails that comply with **521 CMR 24.5, Handrails**;
b. Curbs that are at least four inches (4" = 102mm) high and are preceded by *detectable warnings* that comply with 521 CMR; or
c. *Detectable warnings* that comply with 521 CMR.

19.00: **RECREATIONAL FACILITIES**

19.12 ACCESSIBLE ROUTE

There shall be an *accessible route* to and throughout the *marine facility* that connects the vessels boarding area with all other areas and services available to the public within the *marine facility*. The *accessible route* shall comply with **521 CMR 20.00: ACCESSIBLE ROUTE**.

19.13 ANCILLARY FACILITIES

Where provided within the *marine facility*, ancillary *facilities* such are fare transaction areas, public toilets, public telephones, vendor(s) stands, etc., shall comply with 521 CMR.

19.14 MARINE FACILITIES THAT SERVICE WATERBORNE PASSENGER VESSELS WITH A VESSEL LENGTH OF LESS THAN 40 FEET (40' = 12m) - Reserved.

521 CMR 20.00: ACCESSIBLE ROUTE

20.1 GENERAL

An *accessible route* shall provide a continuous unobstructed path connecting *accessible spaces* and *elements* inside and outside a *facility*. *Accessible routes* may include but are not limited to *walks*, halls, corridors, aisles, skywalks, and tunnels. *Accessible routes* may not include stairs, steps, or escalators, even if the stairs and steps are required to be *accessible* under 521 CMR.

20.2 LOCATION

Within the boundary of the *site*, an *accessible route(s)* shall be provided from *accessible* parking, *accessible* passenger loading zones, and public streets or *sidewalks* to the *accessible building entrance* they serve. The *accessible route(s)* shall coincide with the route for the general public.

20.2.1 At least one *accessible route* shall connect *accessible buildings*, *facilities*, *elements* and *spaces* that are on the same *site*.

20.3 WIDTH

An *accessible route* shall have a minimum *clear* width of 36 inches (36" = 914 mm) except at doors and at openings less than 24 inches (24" = 610mm) deep where it shall comply with **521 CMR 26.00: DOORS AND DOORWAYS**.

20.4 TURNS

If a person in a wheelchair must make a turn around an obstruction, the minimum *clear* width of the *accessible route* shall comply with **Fig. 20a or 20b**.

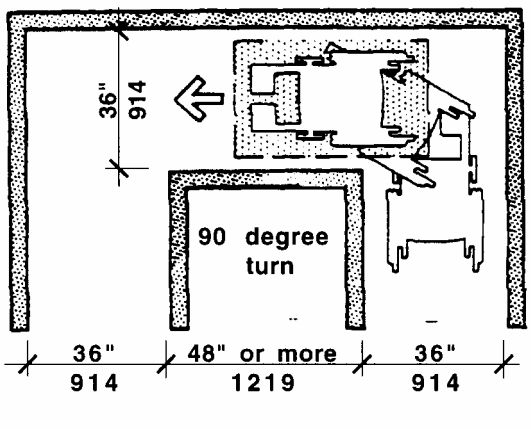

Minimum Clearances for Turning
Figure 20a

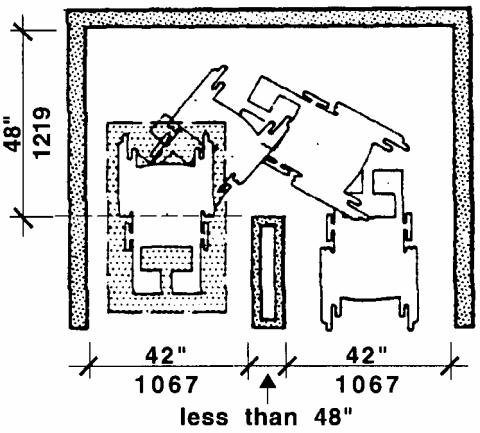

Minimum Clearances for Turning
Figure 20b

20.5 PASSING SPACE

If an *accessible route* has less than 60 inches (60" = 1524mm) *clear* width, then passing *spaces* at least 60 inches by 60 inches (60" x 60" = 1524mm by 1524mm) shall be located at intervals not to exceed 200 feet (200' = 61m). A T-intersection of two corridors or walks is an acceptable passing place.

20.00: **ACCESSIBLE ROUTE**

20.6 **PROTRUDING OBJECTS**

Objects shall not reduce the *clear* width of an *accessible route* or maneuvering *space* (*see* **Fig. 20c**) and must comply with **521 CMR 20.6.1**.

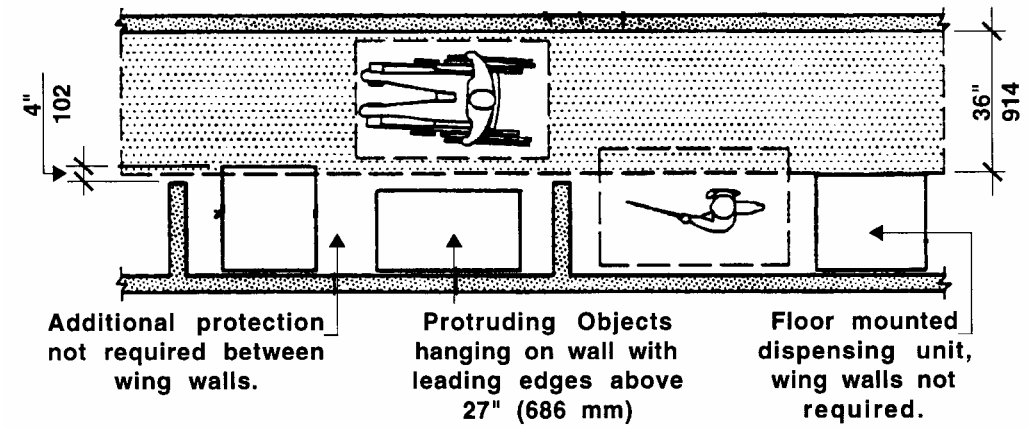

Protruding Objects
Figure 20c

20.6.1 Objects projecting from walls (for example, telephones) with their leading edges between 27 inches and 80 inches (27" and 80" = 686mm and 2032mm) above the finished floor shall protrude no more than four inches (4" = 102mm) into walks, halls, corridors, passageways, or aisles and shall not have sharp or abrupt edges. *See* **Fig. 20d**.

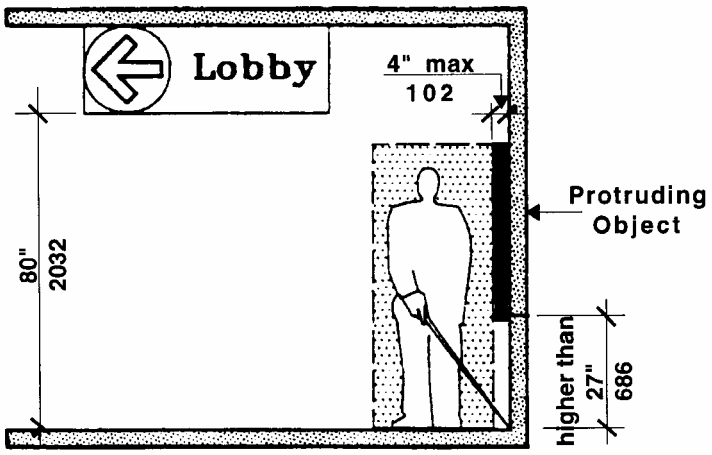

Walking Parallel to a Wall
Figure 20d

20.6.2 Objects mounted with their leading edges at or below 27 inches (27" = 686mm) above the finished floor may protrude any distance as long as they do not reduce the *accessible route* below 36 inches (36" = 914mm). *See* **Fig. 20e**.

20.00: **ACCESSIBLE ROUTE**

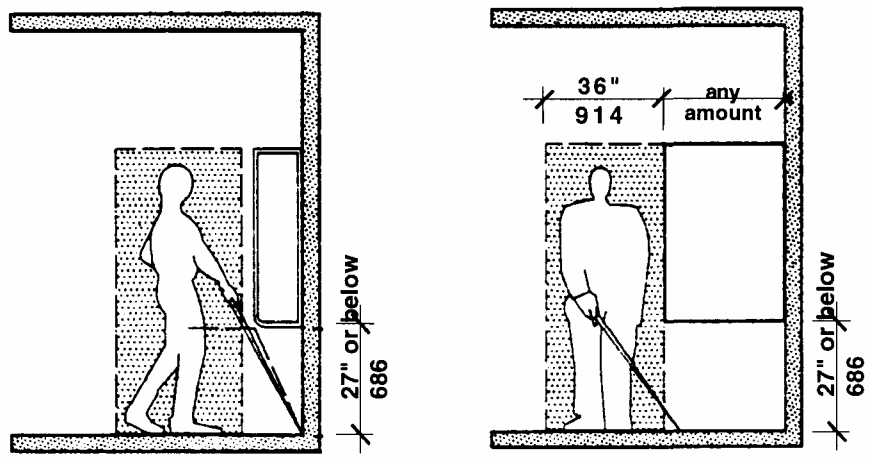

Walking Perpendicular to a Wall **Walking Parallel to a Wall**

Figure 20e

20.6.3 Free-standing objects mounted on posts or pylons may have a maximum overhang of 12 inches (12" = 305mm) measured between 27 inches and 80 inches (27" and 80" = 686mm and 2032mm) above the ground or finished floor. *See* ***Fig. 20f***.

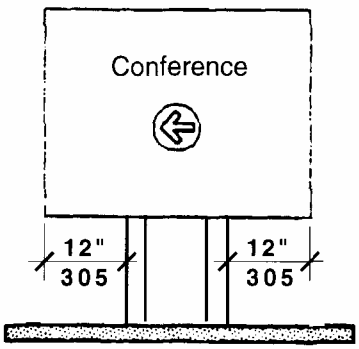

Objects Mounted on Posts or Pylons

Figure 20f

20.7 **HEADROOM**

Walks, halls, corridors, passageways, aisles, or other circulation *spaces* shall have a minimum of 80 inches (80" = 2032mm) *clear* headroom. *See* **Fig. 20d**. If vertical clearance of an area adjoining an *accessible route* is reduced to less than 80 inches (80" = 2032mm), a barrier shall be provided to warn blind or visually-impaired persons of the reduced headroom. *See* **Fig. 20g**.

20.00: ACCESSIBLE ROUTE

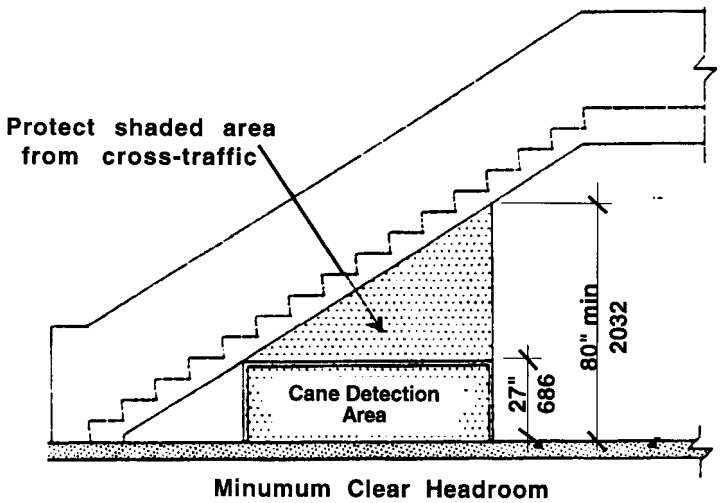

Minumum Clear Headroom
Figure 20g

20.8 SURFACE TEXTURES

The surface of an *accessible route* shall comply with **521 CMR 29.00: FLOOR SURFACES**.

20.9 SLOPE AND CROSS SLOPE

An *accessible route* with a *running slope* steeper than 1:20 (5%) is a *ramp* and shall comply with **521 CMR 24.00: RAMPS**. Nowhere shall the *cross slope* of an *accessible route* exceed 1:50 (2%). (Refer to 521 CMR 2.4.4d)

20.10 CHANGES IN LEVELS

Changes in levels along an *accessible route* shall comply with **521 CMR 29.2, Level Changes**. *See* **Fig 20h**.

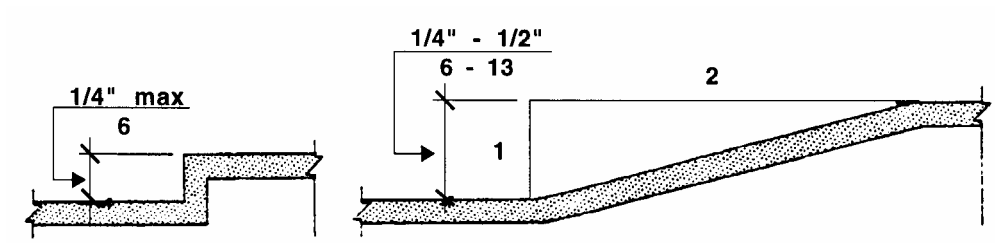

Changes in Level
Figure 20h

20.11 EGRESS

Accessible routes serving any *accessible space* or *element* shall also serve as a *means of egress* for emergencies or connect to an *accessible area of rescue assistance*.

20.00: **ACCESSIBLE ROUTE**

20.11.1 All *spaces* or *elements* required to be accessible by 521 CMR shall be provided with no less than one accessible *means of egress*.

a. Where more than one *means of egress* is required under 780 CMR (The Massachusetts State Building Code) from any *accessible space* or *element*, each space or element shall be served by not less than two accessible *means of egress*.

Exception: For the purpose of 521 CMR 20.11, fire escapes shall be exempt.

20.11.2 The exit discharge shall provide a continuous path of travel from an *exit* to a public way by means of a *walkway* or a *ramp*.

a. Where public ways are further than 100 feet from an exit, exterior *areas of rescue assistance* complying with 20.12.2 may be constructed along the exit discharge located no closer than 100 feet from the building.
b. in buildings where the grade at the level of exit discharge prohibits construction of either a *walkway* or a *ramp*, a portion of an exterior exit balcony located immediately adjacent to an emergency exit complying with 521 CMR 20.12.2 may be constructed as an *area of rescue assistance*.

20.12 **AREAS OF RESCUE ASSISTANCE**
Shall be provided where an *accessible means of egress* is not provided and shall comply with the following requirements:

Exception: *Areas of rescue assistance* are not required in:
a. existing buildings undergoing alterations, remodeling, reconstruction
b. *buildings* or *facilities* having a supervised automatic sprinkler systems
c. tunnels;
d. open air parking garages and open air transit stations

20.12.1 Location and *Construction*: An *area of rescue assistance* shall be one of the following:

a. A portion of a stairway landing within a smokeproof enclosure (complying with applicable requirements of 780 CMR (The Massachusetts State Building Code). *See* **Fig. 20i**.

20.00: **ACCESSIBLE ROUTE**

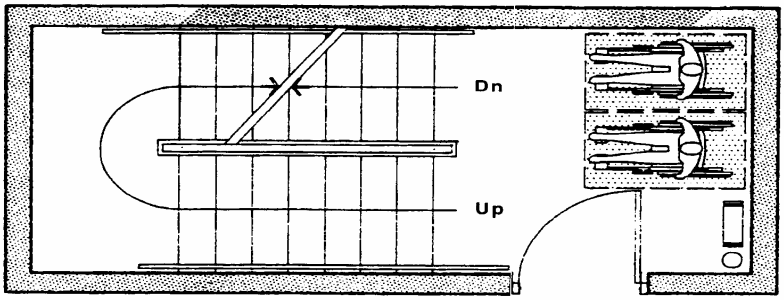

Area of Rescue Assistance in Stairway
Figure 20i

b. A portion of an exterior exit balcony located immediately adjacent to an exit stairway when the balcony complies with applicable requirements of 780 CMR (The Massachusetts State Building Code) for exterior exit balconies. Openings to the interior of the building located within 20 feet (20' = 6m) of the *area of rescue assistance* shall be protected with fire assemblies having a ¾ hour fire protection rating.

c. A portion of a one hour fire-resistive corridor (complying with applicable requirements of 780 CMR: the State Building Code for fire-resistive construction and for openings) located immediately adjacent to an exit enclosure. (*See* **Fig. 20j**)

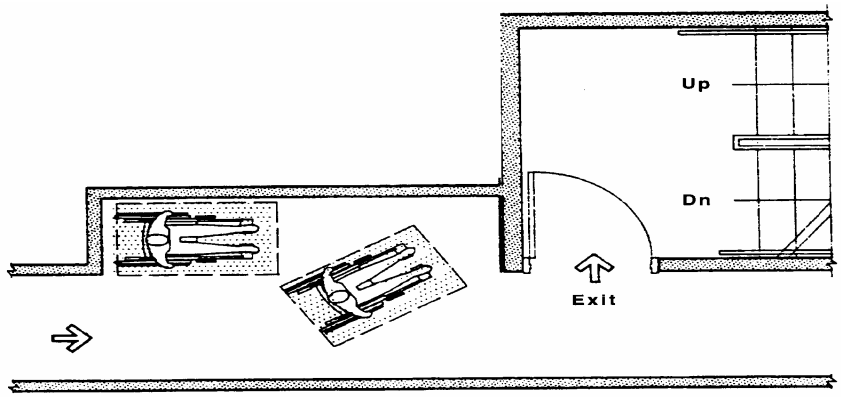

Area of Rescue Assistance in Corridor
Figure 20j

d. A vestibule located immediately adjacent to an exit enclosure and constructed to the same fire-resistive standards controlling corridors and openings.

e. A portion of a stairway landing within an exit enclosure which is vented to the exterior and is separated from the interior of the building with not less than one hour fire-resistive doors.

f. When approved by the appropriate applicable building official, an area or a room that is separated from other portions of the *building* by a smoke barrier. Smoke barriers shall have a fire-resistive rating of not less than one hour and shall completely enclose the area or room. Doors in the smoke barrier shall be tight-fitting smoke- and draft-control assemblies having a fire-protection rating of not less than 20 minutes and shall be self-closing or automatic closing. The area or room shall be provided with an exit directly to an exit enclosure. Where the room or area exits into an exit enclosure which is required to be of more than one hour fire-resistive *construction*, the room or area shall have the same fire-resistive *construction*, including the same opening protection, as required for the adjacent exit enclosure.

20.00: **ACCESSIBLE ROUTE**

g. An elevator lobby where elevator shafts and adjacent lobbies are pressurized as required for smokeproof enclosures by 780 CMR: the State Building Code or 524 CMR: the State Board of Elevator Regulations, and when complying with requirements herein for size, communication, and *signage*. Such pressurization system shall be activated by smoke detectors on each floor located in a manner approved by the appropriate local authority. Pressurization equipment and its duct work within the building shall be separated from other portions of the building by a minimum two-hour fire restrictive construction.
h. A flat level area that is stable, firm and slip resistant adjacent to the exit discharge in locations where the public way is further than 100 feet from the building.

20.12.2 Size: Each *area of rescue assistance* shall provide at least two *accessible* spaces, not less than 30 inches by 48 inches (30" x 48" = 762mm by 1219mm) each.

a. The *area of rescue assistance* shall not encroach on any required exit width.
b. The total number of such 30 inch by 48 inch (30" x 48" = 762mm by 1219mm) areas per *story* shall be not less than one for every 200 persons of calculated occupant load served by the *area of rescue assistance*.

20.12.3 *Stairway* Width: Each *stairway* adjacent to an *area of rescue assistance* shall have a minimum *clear* width of 48 inches (48" = 1219mm) between handrails.

20.12.4 Two-way Communication: A method of two-way communication, with both visible and audible signals, shall be provided between each *area of rescue assistance* and the primary entrance to the *building*. The fire department or appropriate building official may approve a location other than the primary *entrance* to the *building*. Any operable mechanism shall comply with **521 CMR 39.00: CONTROLS**.

20.12.5 Identification: Each *area of rescue assistance* shall be identified by a sign that states "*area of rescue assistance*" and displays the international symbol of accessibility. The sign shall be illuminated when exit sign illumination is required. *Signage* shall also be installed at all inaccessible exits and where otherwise necessary to clearly indicate the direction to *areas of rescue assistance*. In each *area of rescue assistance*, instructions on the use of the area under emergency conditions shall be posted adjoining the two-way communication system.

521 CMR 21.00: **CURB CUTS**

21.1 **GENERAL**

Whenever *sidewalks*, *walkways*, or curbs on streets and ways are *constructed*, *reconstructed*, or *repaired*, *curb cuts* are required. All *curb cuts* shall comply with the following:

21.2 **LOCATION**

Curb cuts shall occur wherever an *accessible route* crosses a curb and at the following locations:

21.2.1 *Curb cuts* are required at each corner of each intersection, located within the crosswalk and/or the pedestrian path of travel. *Curb cuts* shall be perpendicular to the curb at street crossings and each shall have a *level* landing at the top. At marked crossings, the bottom of the *ramp* run, exclusive of flared sides, shall be wholly contained with the marked crossing. **See Fig. 21a**. The crosswalk/pedestrian path of travel must also be perpendicular to the curb.

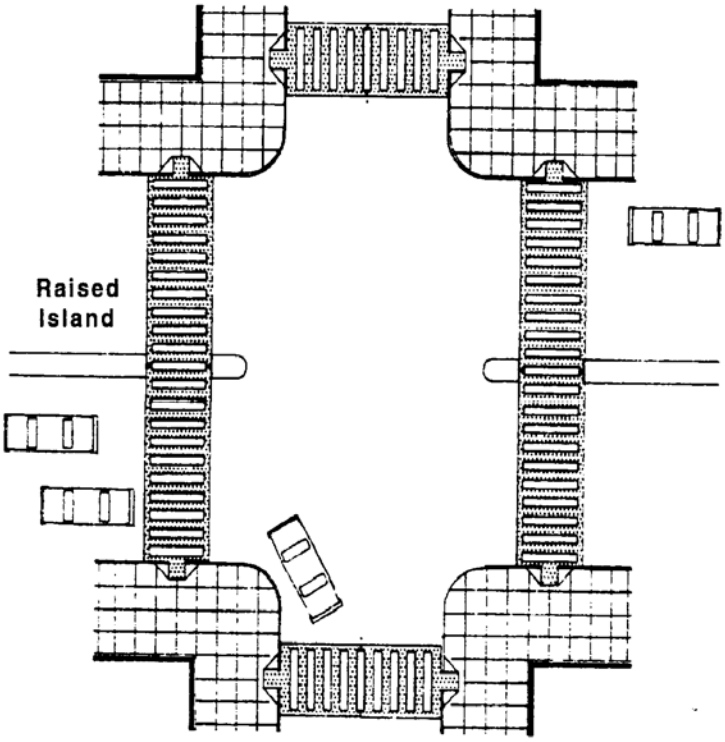

Curb Cuts at Intersection
Figure 21a

Exception: Where pedestrian right-of-way established width will not accommodate a perpendicular *curb cut* and landing, a parallel public *sidewalk curb cut* with a *level* landing at its bottom shall be provided instead of a perpendicular *curb cut*.

21.2.1.1 Apex *curb cuts*: Where site constraints prevent the installation of a perpendicular *curb cut* or a parallel *curb cut* with a level landing, an apex curb cut is allowed. Site constraints include the following:

21.00: **CURB CUTS**

a. Driver or pedestrian line of sight to or from the front of the level landing on the ramp is impaired, preventing safe observation of crosswalks or approaching traffic at the intersection by a significant immovable or unalterable streetscape feature such as a building, structure or historic element, etc.
b. Stop line is beyond the allowed limit as stated in the Manual on Uniform Traffic Control Devices.
c. Vaults containing electrical, telecommunications, etc. that are under or on the existing sidewalk.
d. Large radius intersections which are 30 feet or greater.

21.2.1.2 When apex *curb cuts* are installed a 48 inch (48" = 1219mm) landing shall also be provided at the bottom of the *curb cut* and located within the marked crosswalk.

21.2.2 Reciprocal *curb cuts*: When *curb cuts* or *sidewalks* are being *constructed* or *reconstructed* on one side of the street, and when such *curb cuts* or *sidewalks* are connected to an opposite side of the street by one or more pedestrian paths of travel, then at least one *curb cut* shall be provided on the opposite side of the street where such side is controlled by the same owner.

21.2.3 Driveways: *Curb cuts* are required at driveways intersecting *sidewalks* when the driveway has side curbs.

21.2.4 Raised Islands: Any raised islands in crossings shall be cut through *level* with the street or have *curb cuts* at both sides and a *level* area at least 48 inches (48" = 1219mm) long between the *curb cuts* in the part of the island intersected by the crossings.

21.2.5 Obstructions: *Curb cuts* shall be located or protected to prevent their obstruction by parked vehicles.

21.3 SLOPE

The least possible slope should be used for any ramp. The maximum slope shall be one-in-12 (1:12) (8.3%). Where *sidewalks* are too narrow to install a straight-line *curb cut* at a slope of one-in-12 (1:12) (8.3%), the sides of the *curb cut* shall not exceed one-in-12 (1:12) (8.3%). **See Fig. 21b**. The maximum cross-slope for any *curb cut* shall be 1:50 (2%). (There is no tolerance allowed on slope requirements). (Refer to 521 CMR 2.4.4d).

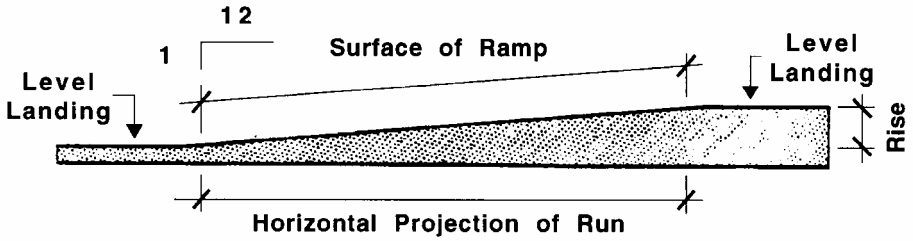

Slope
Figure 21b

21.00: **CURB CUTS**

21.4 TRANSITIONS

Transitions from *curb cuts* to *walks*, gutters, or streets shall be flush or free of changes in *level* greater than ½ inch (½" = 13mm). Maximum slopes of adjoining gutters, road surface immediately adjacent to the curb cuts, or accessible route shall not exceed one-in-20 (1:20) (5%).

21.5 DRAINAGE

Grading and drainage shall be designed to minimize pooling of water, accumulation of ice, or flow of water across the base of the *curb cut*.

21.6 WIDTH

The minimum width of a *curb cut* shall be 36 inches (36" = 914mm), exclusive of flared sides. **See Fig. 21c**.

21.6.1 Landing width: Where a perpendicular *curb cut* is provided, a landing the width of the *curb cut* shall be provided at the top of the *curb cut*. The landing shall be 48 inches (48"= 1219mm) in length. The slope of said landing shall not exceed one-in-50 (1:50) (2%) in any direction.

21.7 FLARED SIDES

Sides of *curb cuts* shall extend at least 24 inches (24" = 610mm) at the curb. The maximum slope of the flare is one-in-ten (1:10) (10%). Curbing at the flared sides must blend with the slope of the flared sides. **See Fig. 21c**.

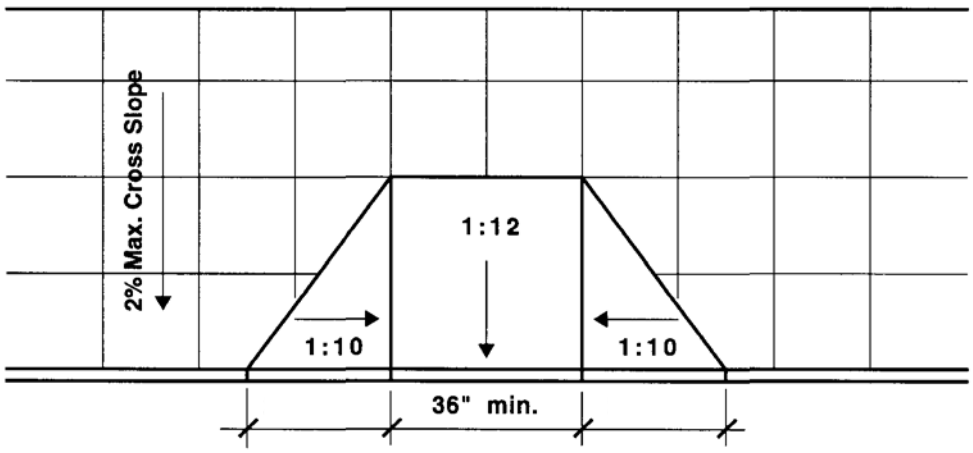

Curb Cut with Flared Sides
Figure 21c

21.8 RETURNED SIDES

Curb cuts with returned sides are only permitted where they are protected by handrails pursuant to **521 CMR 24.5, Handrails** or where pedestrian travel across the *ramp* is obstructed by permanently installed street hardware or landscaping. **See Fig. 21d**.

21.00: CURB CUTS

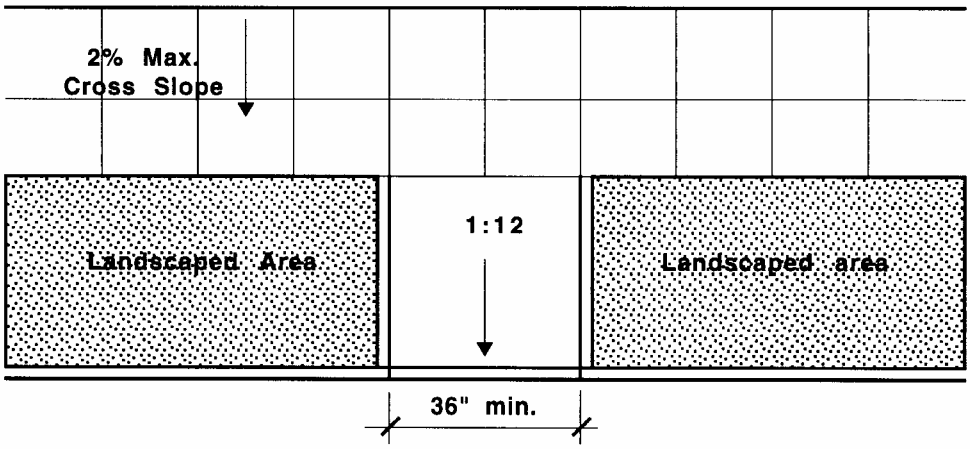

Curb Cut With Returned Sides
Figure 21d

21.9 BUILT-UP CURB CUTS

Built-up *curb cuts* are allowed only where they do not project into vehicular traffic lanes. **See Fig. 21e**.

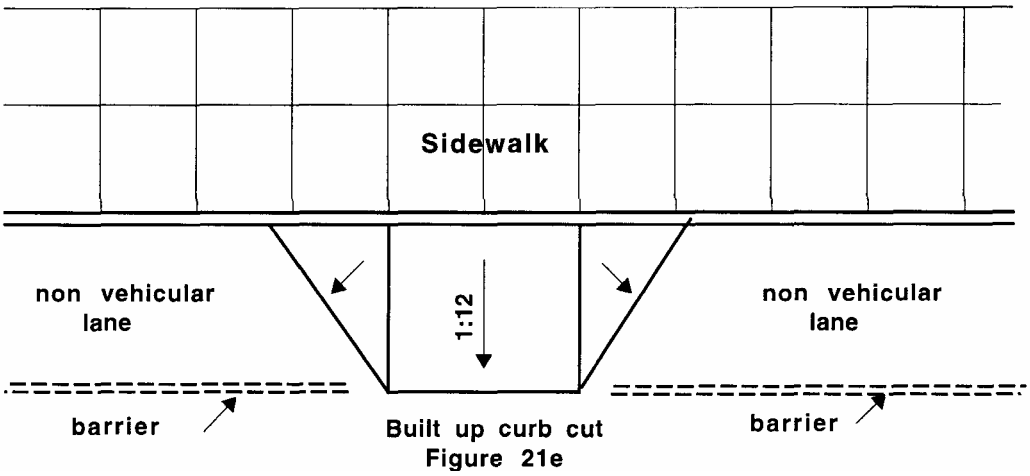

Built up curb cut
Figure 21e

21.10 PEDESTRIAN STREET CROSSINGS

Where provided, pedestrian street crossings at, above, or below grade shall comply with the following:

21.10.1 Crossing controls shall be raised from or flush with their housings and shall be a minimum of two inches (2" = 51mm) in the smallest dimension. The force required to activate controls shall be no greater than 5 lbs.

21.10.2 Location: Controls shall be located as close as practicable to the *curb cut* serving the controlled crossing and shall permit operation from a *clear* ground *space*.

21.00: **CURB CUTS**

21.10.3 Mounting Height: Pedestrian-actuated crossing controls shall be a maximum of 42 inches (42" = 1067mm) above the finished *sidewalk*.

21.10.4 *Clear* ground *space*: A stable and firm area, complying with **521 CMR 6.5, Forward Reach**, or **521 CMR 6.6, Side Reach** shall be provided at the controls. Where a parallel approach is provided, controls shall be within ten inches (10" = 254mm) horizontally of and centered on the *clear* ground *space*. Where a forward approach is provided, controls shall abut and be centered on the *clear* ground *space*.

21.11 **DETECTABLE WARNINGS -** Reserved until further notice.

21.12 **ACCESSIBLE PEDESTRIAN SIGNALS - Reserved**.

521 CMR 22.00: **WALKWAYS**

22.1 **GENERAL**

Walkways shall include but not be limited to all *walks*, *sidewalks*, overpasses, bridges, tunnels, underpasses, plazas, courts and other pedestrian pathways, and shall comply with the following requirements:

22.2 **WIDTH**

Width of *walkways* shall be not less than 48 inches (48"= 1219mm), excluding curb stones. An unobstructed path of travel shall be provided which is at least 36 inches (36" = 914mm) *clear*, excluding curb stones.

22.3 **GRADE**

Walkways with a running slope greater than one-in-20 (1:20) (5%) are ramps and shall comply with **521 CMR 24.00: RAMPS**.

22.3.1 Nowhere shall the *cross slope* of *walkways* exceed one-in-50 (1:50) (2%). (Refer to 521 CMR 2.4.4d.)

Exception: *Sidewalks* on streets and ways shall be considered *walkways*, with the exception that if the slope of the natural topography exceeds one-in-20 (1:20) (5%) a *ramp* is not required.

22.3.2 Nowhere shall the surface slope of any plaza area exceed one-in-50 (1:50) (2%).

22.4 **LEVEL CHANGES**

Walkways shall have continuous common surfaces, not interrupted by steps or changes in *level* greater than ¼ inch (¼" = 6mm).

22.4.1 Changes in *level* between ¼ inch and ½ inch (¼" and ½" = 6mm and 13mm) shall be beveled with a slope no greater than 1:2 (50%). *See* **Fig. 22a**.

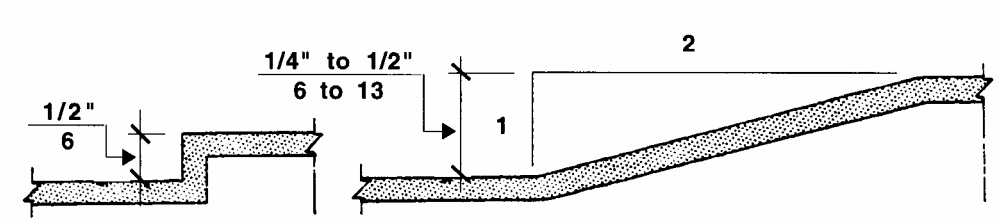

Changes in Level
Figure 22a

22.4.2 Changes in level greater than ½ inch (½" = 13mm) shall require a *curb cut*, *walkway*, *ramp*, elevator, or platform lift that complies with **521 CMR 21.00: CURB CUTS, 521 CMR 22.00: WALKWAYS, 521 CMR 24.00: RAMPS** or **521 CMR 28.00: ELEVATORS**.

22.00: WALKWAYS

22.5 SURFACE

Walkway surfaces shall be stable, and firm and shall lie generally in a continuous plane with a minimum of surface warping.

22.6 DRAINAGE

Grading and drainage shall be designed to minimize pooling of water or accumulation of ice or flow of water across *walkways*.

22.7 GRATINGS

If gratings are located in walking surfaces, they shall have spaces no greater than ½ inch (½" = 13mm) wide in the direction of the flow of travel. If gratings have elongated openings, then they shall be placed so that the long dimension is perpendicular to the dominant direction of travel. *See* **Fig. 22b**.

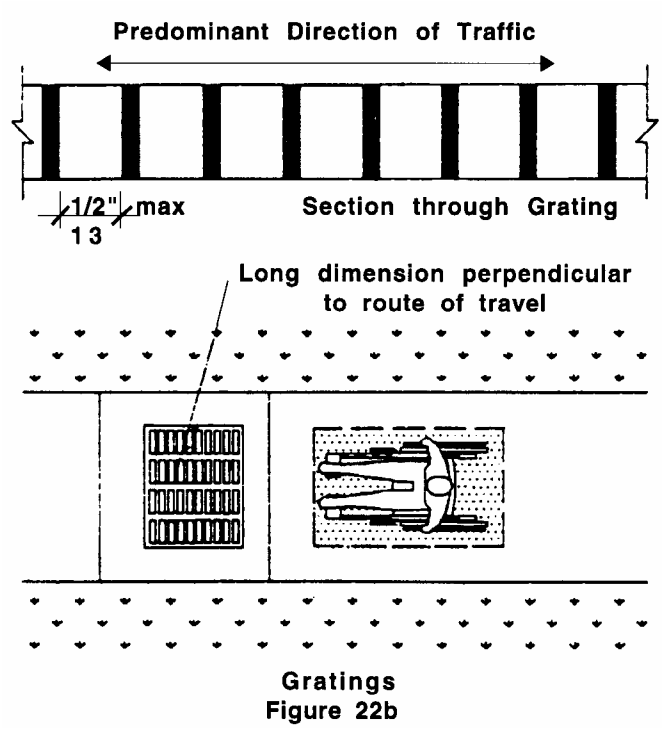

Gratings
Figure 22b

22.8 INTERSECTIONS

Wherever a *walkway* crosses or joins streets, public ways, driveways or parking lots, it shall comply with the following:

22.8.1 The intersecting surfaces shall blend to a common *level* with a slope no greater than 1:20 (5%), or a *curb cut* shall be installed in compliance with **521 CMR 21.00: CURB CUTS**.

521 CMR 23.00: **PARKING AND PASSENGER LOADING ZONES**

23.1 **GENERAL**

Any person who has lawful control of improved or enclosed private property used as off-street parking for businesses, auditoriums, sporting or recreational *facilities*, cultural centers, or general *public use* where the public has the right of access as invitees or licensees, shall cause such parking areas, including temporary parking areas to comply with 521 CMR. For parking related to residential and *transient lodging facilities*, *See* **521 CMR 8.00: TRANSIENT LODGING FACILITIES** and **521 CMR 10.3, Parking Spaces**.

23.2 **NUMBER**

Accessible spaces shall be provided as follows:

23.2.1

Total Parking in Lot	Required Minimum Number of Accessible Spaces
15-25	1
26-50	2
51-75	3
76- 100	4
101-150	5
151-200	6
201-300	7
301-400	8
401-500	9
501-1,000	2% of total
1,001 and over	20 plus 1 for each 100 over 1000

23.2.2 One in every eight *accessible* spaces, but not less than one, shall be van *accessible*, See **521 CMR 23.4.7**.

23.2.3 Spaces required by the table in **521 CMR 23.2.1** need not be provided in a particular lot. They may be provided in a different location if equivalent or greater accessibility, in terms of distance from an *accessible entrance*, cost and convenience, is ensured.

23.2.4 Specialized Medical *Facilities*: At *facilities* providing medical care for persons with mobility impairments, parking spaces shall comply with the following:

a. Outpatient units and facilities: 10% of the total number of parking spaces provided to serve each such outpatient unit or facility shall be *accessible*.
b. Units and facilities that specialize in treatment or services for persons with mobility impairments: 20% of the total number of parking spaces provided, serving each such unit or facility, shall be *accessible*.

23.00: PARKING AND PASSENGER LOADING ZONES

23.3 LOCATION

Accessible parking spaces shall be located as follows:

23.3.1 *Accessible* parking spaces serving a particular *building*, facility or temporary event shall be located on the shortest *accessible route* of travel from adjacent parking to an *accessible entrance*.

23.3.2 In parking *facilities* that do not serve a particular *building*, *accessible* parking shall be located on the shortest *accessible route* of travel to an *accessible* pedestrian *entrance* of the parking *facility*.

23.3.3 In buildings with multiple *accessible entrances* with adjacent parking, *accessible* parking spaces shall be dispersed and located closest to the *accessible entrances*, but in no case, more than three spaces from the accessible entrance.

Exception: Where *accessible spaces* cannot be located within 200 feet (200' = 61m) of an *accessible entrance*, an *accessible* passenger drop-off area shall be provided within 100 feet (100' = 30m) of an *accessible entrance*.

23.3.4 Garages: In multi-level garages where no elevator is provided, such spaces shall all be located near the *accessible entrance*. See special van requirement in **521 CMR 23.4.7**.

23.4 PARKING SPACES

Shall comply with the following:

23.4.1 Width: *Accessible* parking spaces shall be at least eight feet (8' = 2438mm) wide, plus the *access aisle*.

23.4.2 Length: The length of *accessible* parking spaces shall be at least the same as for parking spaces generally in accordance with 780 CMR: *The State Building Code* or local zoning requirements. Parked vehicles shall not reduce the *clear* width of an *accessible route* by overhanging or protruding into it.

23.4.3 Slope: Parking spaces shall be *level* with surface slopes not exceeding 1:50 (2%) in all directions.

Exception: When *temporary accessible parking* is located within a field or otherwise unpaved area, when such *site* has not been improved in accordance with 521 CMR, the spaces shall be located on the least sloping area of the parking lot.

23.4.4 Surface: Spaces shall have a uniform, paved or hard packed smooth surface.

Exception: Temporary accessible parking spaces shall have, at minimum, a hard packed, smooth surface with a minimum amount of pooling or draining water.

23.00: PARKING AND PASSENGER LOADING ZONES

23.4.5 Delineation: *Accessible spaces* shall be marked by high contrast painted lines or other high contrast delineation.

Exception: Temporary accessible parking spaces shall be easily identifiable, such as lined with field markings, paint or field tape. Traffic cones or barrels may be used to identify parking spaces where field markings, paint, or field tape cannot be used given the surface condition.

23.4.6 *Access aisles*: All *accessible spaces* shall have *access aisles* that comply with the following:

a. Parking *access aisles* shall be part of an *accessible route* to the *building* or *facility entrance* and shall comply with **521 CMR 20.00: ACCESSIBLE ROUTE**.

Exception: For temporary accessible parking, directional signage along the entire accessible route, using the international symbol of accessibility and an arrow, shall be used to direct people to the closest accessible entrance.

b. *Access aisles* adjacent to *accessible spaces* shall be five feet (5' = 1524mm) wide minimum, except adjacent to van *accessible spaces* the *access aisle* shall be a minimum of eight feet (8' = 2438mm) wide.

Exception: When temporary accessible parking is located within a field or otherwise unpaved site, when such area has not been improved in accordance with 521 CMR, the spaces shall be located on the least sloping area of the parking lot in conjunction with the temporary accessible parking spaces.

c. Two *accessible* parking spaces may share a common *access aisle*. *See* **Fig. 23a** and **23b**.

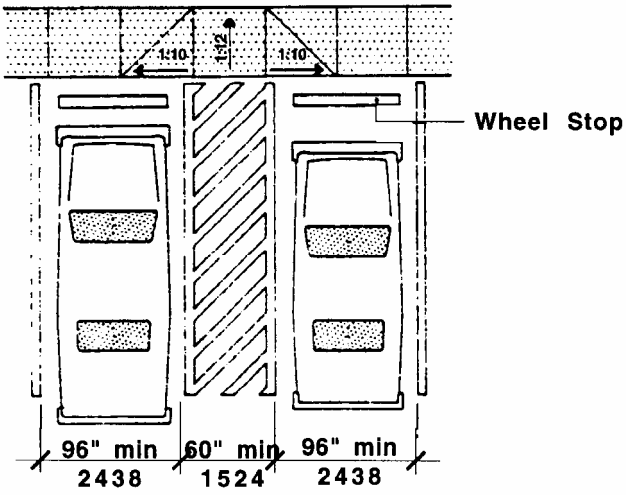

Alternate Stall
Figure 23a

23.00: **PARKING AND PASSENGER LOADING ZONES**

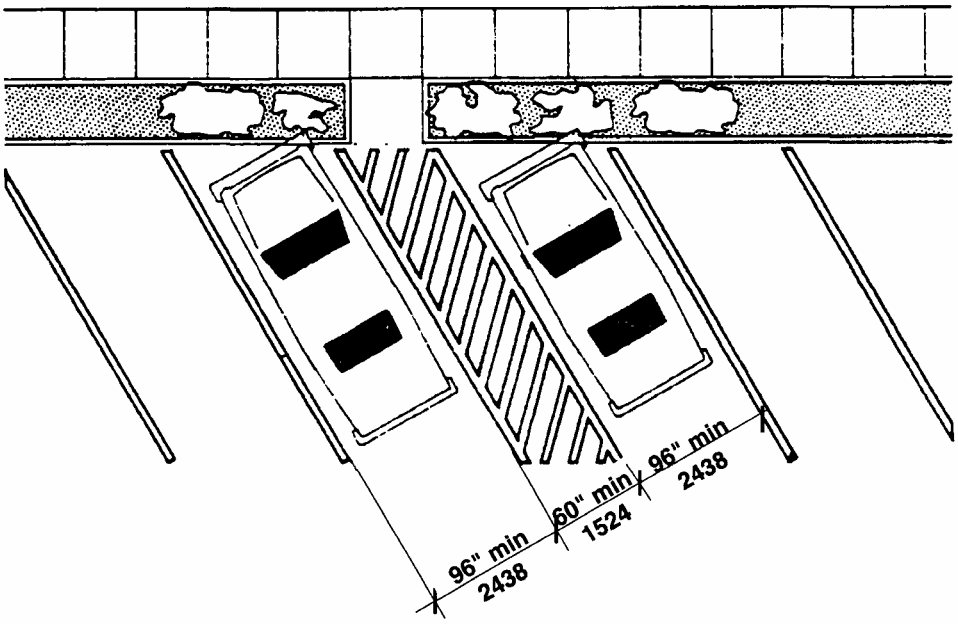

Angled Parking
Figure 23b

d. *Access aisles* shall be *level* with surface slopes not exceeding 1:50 (2%) in all directions.
e. *Access aisles* shall be clearly marked by means of diagonal stripes.

23.4.7 Van *Accessible spaces* shall comply with the following:

a. Provide minimum vertical clearance of eight feet, two inches (8’2” = 2489mm) at the parking *space* and along at least one vehicle *access route* to such spaces from site entrance(s) and exit(s). *See* **Fig. 23c**.

23.00: PARKING AND PASSENGER LOADING ZONES

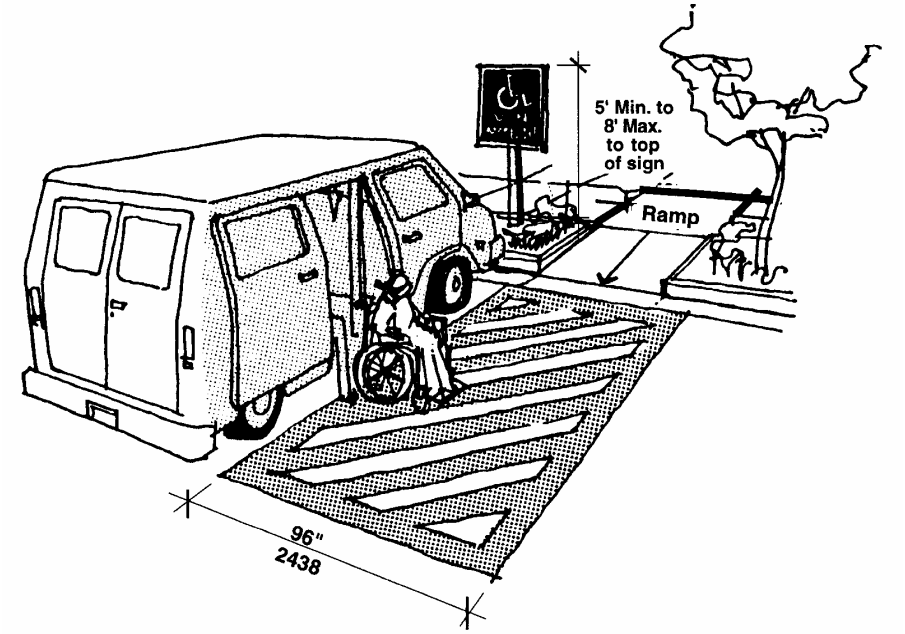

Van Accessible Space
Figure 23c

b. Each *space* shall have a sign designating it "Van Accessible" as required by **521 CMR 23.6, Signage**.
c. All such *spaces* may be grouped on one level of a parking structure.
d. Eight foot minimum (8' = 2438mm) wide *space*.
e. Provide an *access aisle* of eight feet (8' = 2438mm).

Exception: Van *accessible* spaces do not have to be separately provided if all required *accessible* parking *spaces* are 11 feet wide (11' = 3353mm) with a five foot (5' = 1524mm) *access aisle*.

23.5 SIDEWALKS

Where *sidewalks* are provided at *accessible* parking *spaces*, a *curb cut* shall be installed at the *access aisle* of each *accessible space* or pair of *spaces*.

Exception: Where walkways and sidewalks are provided at temporary accessible parking spaces, there shall be a firm, stable path of travel, not less than 36 inches wide, from the temporary accessible parking spaces to said walkway or sidewalk. There shall be no abrupt changes in level greater than ½ inch. If there is a change of level greater than ½ inch, then vertical access shall be provided either via temporary curb ramps or via a temporary ramp.

23.6 SIGNAGE

Accessible parking *spaces* shall be identified by signs indicating that they are reserved.

23.6.1 A sign shall be located at the head of each space and no more than ten feet (10' = 3048mm) away, and at *accessible* passenger loading zones and may also include wording identifying its use.

23.00: **PARKING AND PASSENGER LOADING ZONES**

Exception: Signs for temporary accessible parking spaces located within a field or otherwise unpaved area shall be located at the head of each space if there are no attendants directing people to park, or signs indicating a general area designated for accessible vehicles if parking attendants are directing people to park.

23.6.2 The sign shall show the international symbol of *accessibility*.

23.6.3 Van *accessible spaces* shall includes the words: "Van-Accessible".

23.6.4 Such signs shall be permanently located at a height of not less than five feet (5' = 1524mm), nor more than eight feet (8' = 2438) to the top of the sign.

Exception: Signage for *temporary accessible parking* spaces may be permanently attached to a pole within a bucket.

23.7 **PASSENGER LOADING ZONE**
If passenger loading zones are provided, at least one of them shall comply with the following:

23.7.1 Wherever a passenger loading zone or parking area is provided, an *accessible route* to an *accessible entrance* is required.

23.00: **PARKING AND PASSENGER LOADING ZONES**

23.7.2 Passenger loading zones shall provide an *access aisle* at least 60 inches (60" = 1524mm) wide and 20 feet (20' = 6096mm) long, adjacent and parallel to the vehicle pull-up space.

23.7.3 If there are curbs between the *access aisle* and the vehicle pull-up space, then a *curb cut* complying with **521 CMR 21.00: CURB CUTS**, shall be provided.

23.7.4 Vehicle standing spaces and *access aisles* shall be level with surface slopes not exceeding 1:50 (2%) in all directions.

23.7.5 Vertical Clearance: A minimum of nine feet, six inches (9'6" = 2896mm) of vertical clearance shall be provided at *accessible* passenger loading zones and along at least one vehicle access *route* to such areas from *site entrance(s)* and exit(s).

23.8 **VALET PARKING**
Valet parking *facilities* shall provide a passenger loading zone complying with **521 CMR 23.7, Passenger Loading Zone** located on an *accessible route* to the *entrance* of the *facility*. **521 CMR 23.2 Number** and **521 CMR 23.4.7 Van Accessible Spaces**, do not apply to valet parking facilities.

521 CMR 24.00: **RAMPS**

24.1 GENERAL

Any part of an *accessible route* with a slope greater than 1:20 (5%) shall be considered a *ramp* and shall comply with the requirements of 521 CMR 24.00

24.2 SLOPE AND RISE

Ramps shall have the least possible slope.

24.2.1 The least possible slope should be used for any ramp. The maximum slope of a *ramp* shall be 1:12 (8.3%). (There is no tolerance allowed on slope, Refer to **521 CMR 2.4.4d**)

24.2.2 The maximum rise for any run shall be 30 inches (30" = 762mm). *See* **Fig. 24a**.

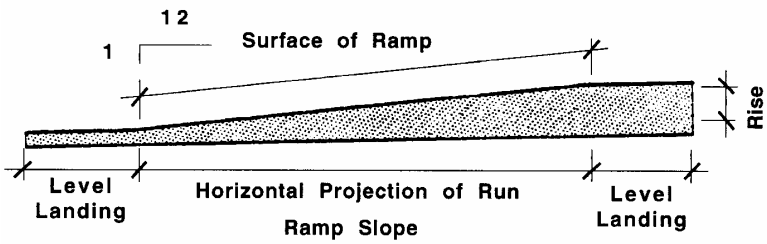

Ramp Slope
Figure 24a

Exceptions: A slope between 1:10 (10%) and 1:12 (8.3%) is allowed for a single rise of a maximum three inches (3" = 76mm).

24.3 CLEAR WIDTH

The minimum *clear* width of a *ramp* shall be 48 inches (48" = 1219mm), measured between the railings. *See* **Fig. 24b**.

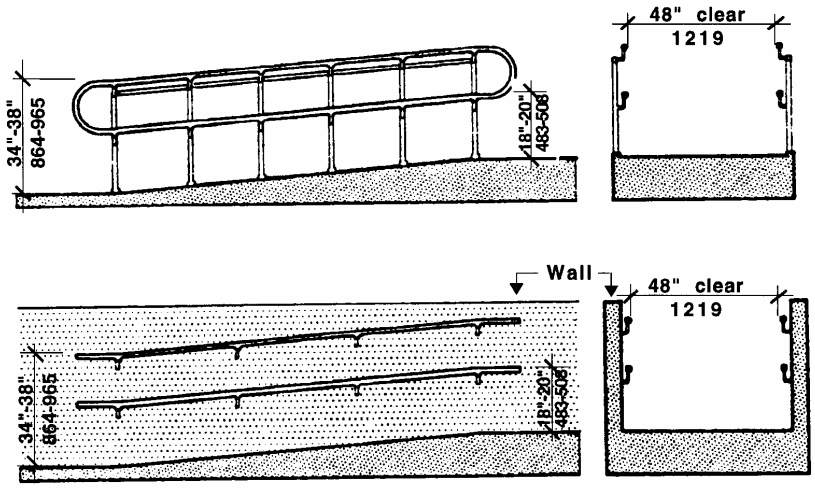

Ramp Width and Handrail Height
Figure 24b

24.00: **RAMPS**

24.4 **LANDINGS**

Ramps shall have landings for turning and resting. At a minimum, landings shall be located at the bottom and the top of each *ramp* and each *ramp* run, and whenever a *ramp* changes direction. The maximum length of a *ramp* run between landings shall not exceed 30 feet (30' = 9m). Landings shall have the following features: *See* **Fig. 24c**.

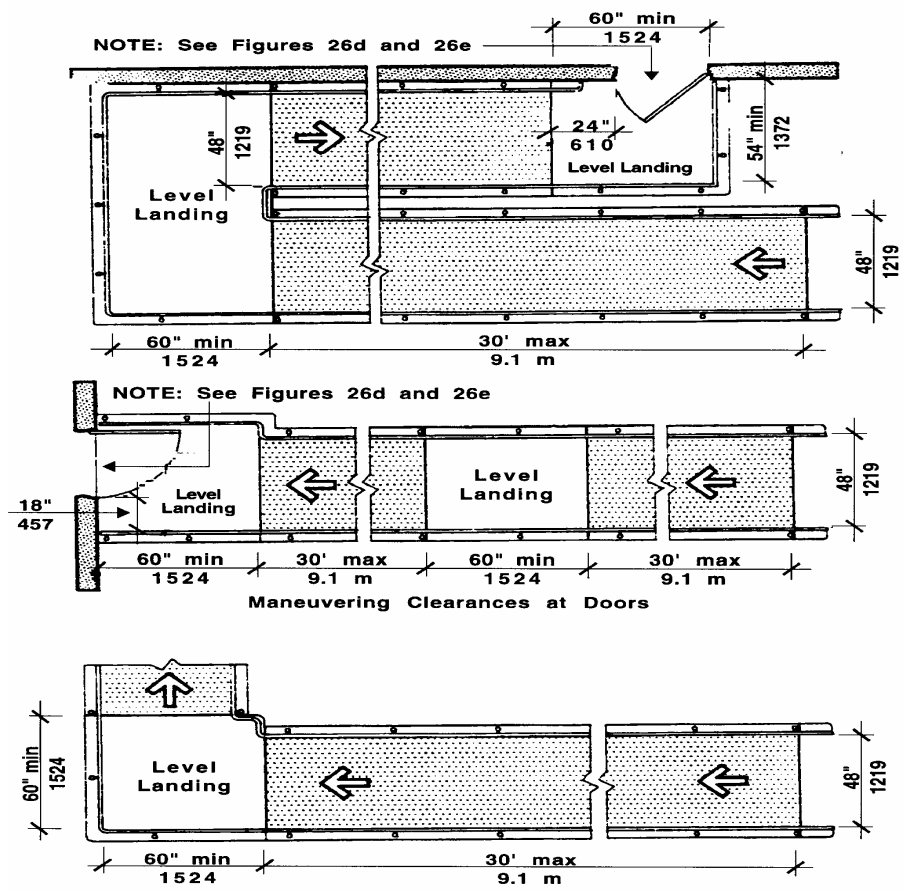

Minimum Landing Size for Change of Direction
Figure 24c

24.4.1 General: Landings shall be *level* and unobstructed by projections and door swings, except as permitted by **521 CMR 24.4.6**.

24.4.2 Width: The landing shall be at least as wide as the *ramp* run leading to it.

24.4.3 Length: The landing length shall be a minimum of 60 inches (60" = 1524mm) *clear*.

24.4.5 Dimensions for turning: If *ramps* change direction at landings, the minimum landing size shall be 60 inches by 60 inches (60" by 60" = 1524mm by 1524mm). *See* **Fig. 24c**.

24.4.6 Doorways at Landings: If a doorway is located at a landing, then the *level* area in front of the doorway shall also comply with maneuvering clearances in **Fig. 26d and 26e**.

24.00: **RAMPS**

24.5 **HANDRAILS**

Handrails shall be provided at all *ramps*. Handrails shall have the following features:

24.5.1 Location: Handrails shall be provided along both sides of *ramp* segments.

24.5.2 Heights: Handrails shall be provided in pairs, one at a height between 34 inches and 38 inches (34" - 38" = 864mm - 965mm), and a lower one at a height between 18 and 20 inches (18"- 20" = 457mm - 508mm), measured vertically from the surface of the *ramp* to top of handrail.

24.5.3 Continuous surface: Handrails shall be continuous without interruption, except by doorways and openings, so that a hand can move from end to end without interruption.

24.5.4 Extensions: Handrails shall extend at least 12 inches (12" = 305mm) beyond the top and bottom of the *ramp* and shall be parallel with the floor or ground surface (*See* **Fig. 24d**), except where the extension would cause a safety hazard.

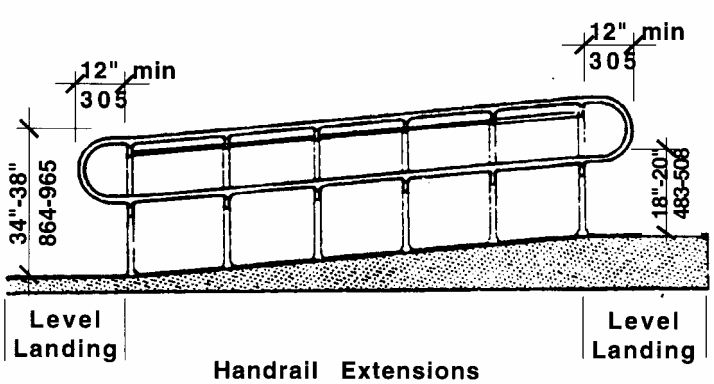

Handrail Extensions
Figure 24d

24.5.5 Size: Handrails shall have a circular cross section with an outside diameter of 1¼ inches (32mm) minimum and two inches (51mm) maximum.

24.5.6 Shape: The handgrip portion of the handrail shall be round or oval in cross-section. *See* **Fig. 24e**.

24.5.7 Surface: The gripping surface shall be free of any sharp or abrasive *elements*.

24.5.8 Clearance: When a handrail is mounted adjacent to a wall, the *clear space* between the handrail and the wall shall be 1½ inches (1½" = 38mm). Handrails may be located in a wall recess if the recess is a maximum of three inches (3" = 76mm) deep and extends at least 18 inches (18" = 457mm) above the top of the rail. *See* **Fig. 24e**.

24.00: **RAMPS**

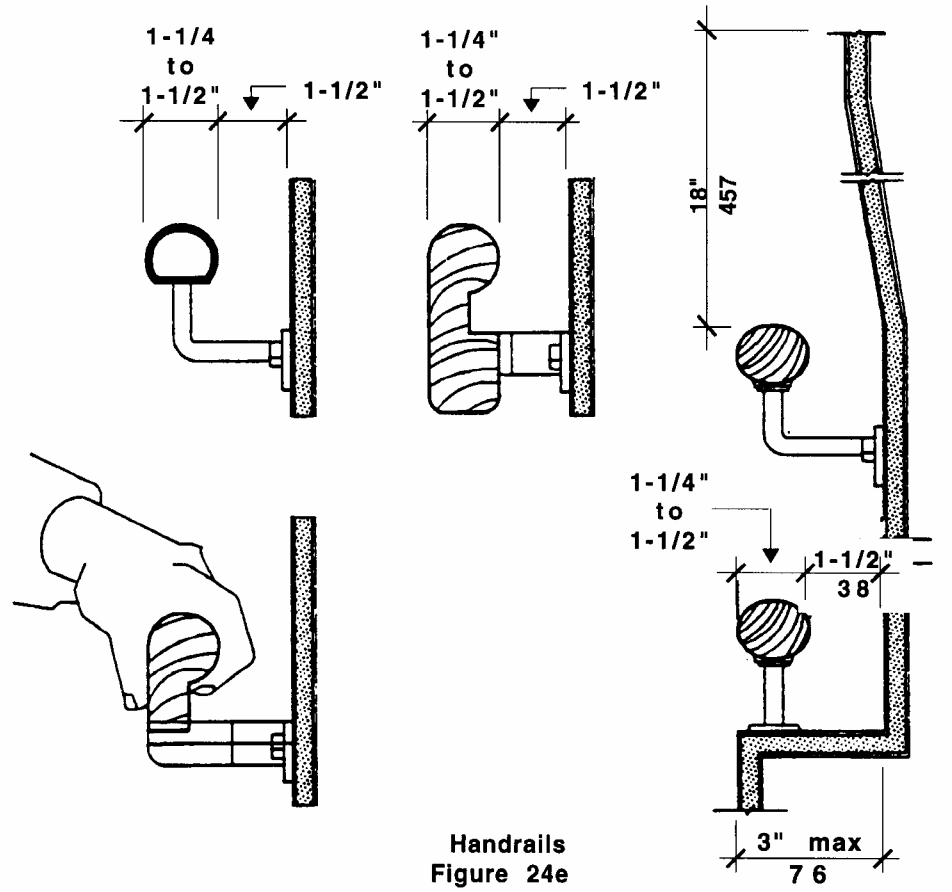

Handrails
Figure 24e

24.5.9 End condition: Ends of handrails shall be either rounded or returned smoothly to floor, wall, or post.

24.5.10 Handrails shall not rotate within their fittings.

24.6 **CROSS SLOPE**
The *cross slope* of *ramp* surfaces shall be no greater than 1:50 (2%)

24.7 **SURFACES**
Ramp surfaces shall be stable, firm, and slip resistant. *Ramps* may be carpeted only if carpeting is installed in accordance with **521 CMR 29.3, Carpets**.

24.8 **EDGE PROTECTION**
Ramps and landings with drop-offs shall have edge curbs, walls, railings, or projecting surfaces that prevent people from slipping off the *ramp*. Edge curbs shall be a minimum of two inches (2" = 51mm) high.

24.00: **RAMPS**

24.9 **OUTDOOR CONDITIONS**

Outdoor *ramps* and their approaches shall be designed so that water will not accumulate on walking surfaces. If gratings are used to disperse water, they shall comply with **521 CMR 22.00: WALKWAYS**.

24.10 **CIRCULAR RAMPS**

Circular *ramps* are not permitted, except with the approval of this *Board*.

521 CMR 25.00: **ENTRANCES**

25.1 GENERAL

All public *entrance(s)* of a *building* or tenancy in a *building* shall be *accessible*. Public *entrances* are any *entrances* that are not solely service *entrances*, loading *entrances*, or *entrances* restricted to employee use only.

25.1.1 Service *entrances*: If the only *entrance* to a *building*, or tenancy in a *facility*, is a service *entrance*, that *entrance* shall be *accessible*.

25.2 APPROACH

The approach to an *accessible entrance* shall be a paved *walk* or *ramp* with a slip resistant surface, uninterrupted by steps. *Entrance(s*) shall have a *level space* on the interior and exterior of the *entrance* doors complying with **Fig. 25a and 25b**.

25.3 VESTIBULES

Between any two hinged or pivoted doors, there shall be a minimum of 48 inches (48" = 1219mm) plus the width of any door swinging into the space. **See Fig. 25a and 25b.**

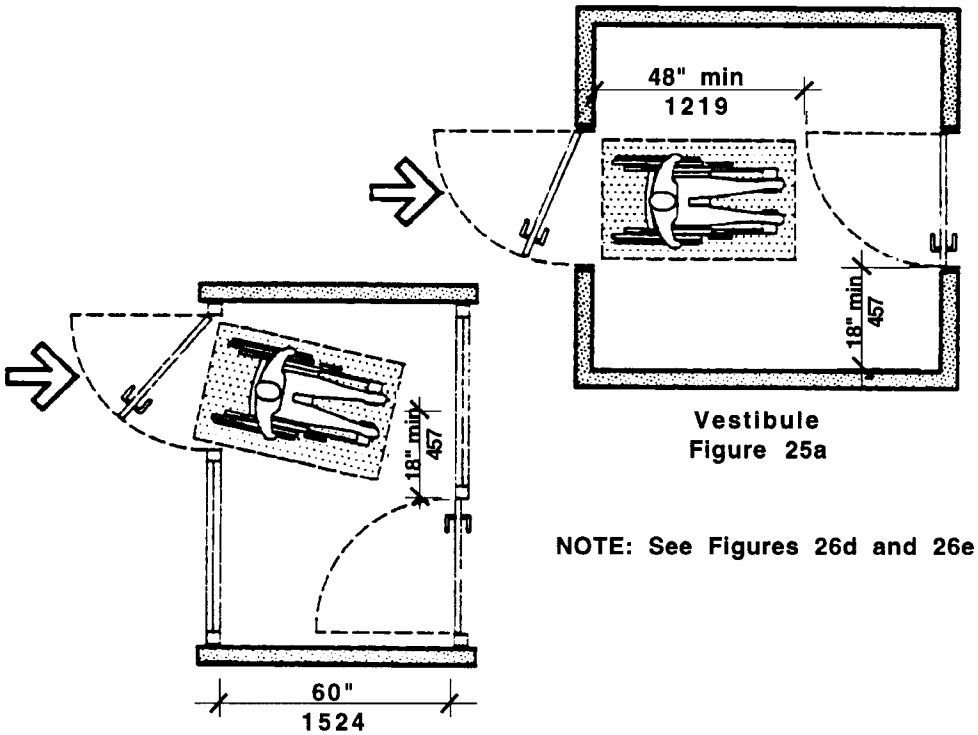

25.00: ENTRANCES

25.4 MATS AND GRATES

Door mats ½ inch (½" = 13mm) thick or less shall be securely anchored at all edges to avoid tripping. Door mats between ¼ inch (¼" = 6mm) and ½ inch (½" = 13mm) thick must be secured with beveled edging that slopes no more than 1:2 (50%). Door mats thicker than ½ inch (½" = 13mm) shall be recessed. Grates shall have openings not exceeding ½ inch (½" = 13mm) in the path of travel. **See Fig. 25c**.

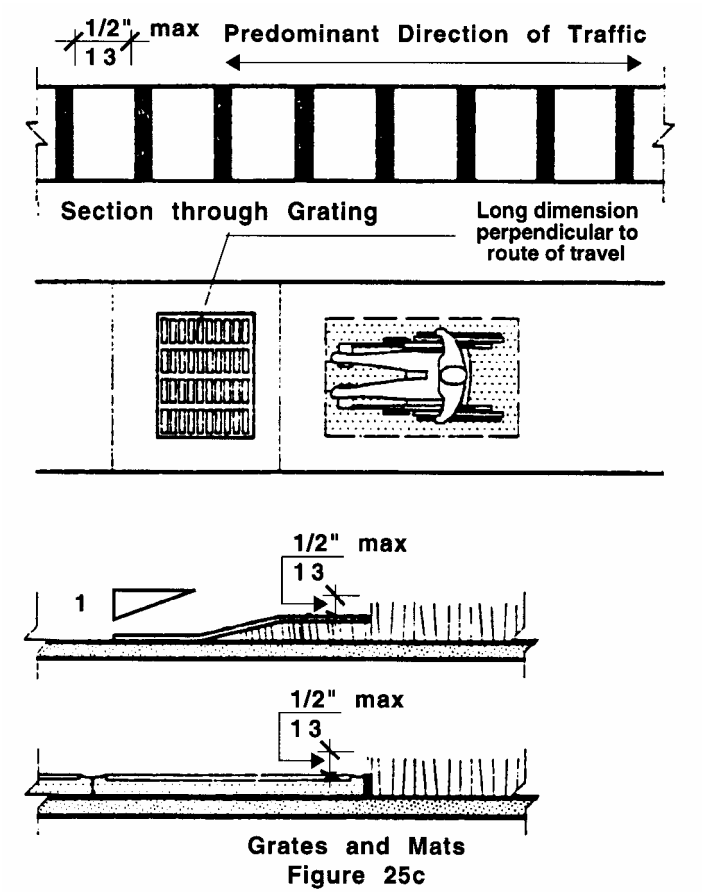

Grates and Mats
Figure 25c

25.5 PROTRUDING OBJECTS

Objects that protrude into entranceways, (suspended lights, signs, fixtures, door closers, etc.) shall comply with **521 CMR 20.6, Protruding Objects**.

25.6 SIGNAGE

Any e*ntrance*/exit of a *facility* not *accessible* by persons in wheelchairs shall have a sign clearly indicating the location of the *accessible entrance*/exit.

521 CMR 26.00: **DOORS AND DOORWAYS**

26.1 GENERAL

All doors and openings along *accessible routes* shall comply with the following requirements.

26.1.1 Gates, including ticket gates, shall also comply with 521 CMR 26.00.

Exceptions: Openings greater than 24 inches (24" = 6110mm) in depth are not doorways but may be part of an *accessible route*, in which case they shall comply with **521 CMR 20.00: ACCESSIBLE ROUTES** and **521 CMR 24.00: RAMPS** (*See* **Fig. 26a**). Doors not requiring full user passage, such as shallow closets, may have the *clear* opening reduced to 20 inches (20" = 508mm) minimum, *See* **521 CMR 9.5.8, Closets**.

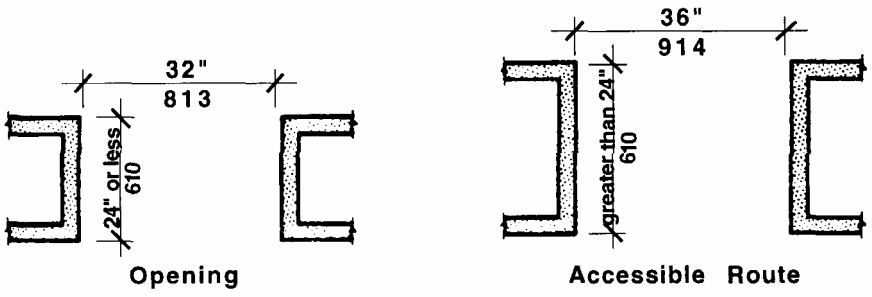

Openings and Accessible Routes
Figure 26a

26.1.2 In buildings classified in the assembly use and educational use (*See* **780 CMR 302.0**) with an occupancy of over 150 (*See* **521 CMR 14.1.1**), all required egress doors which lead directly to the outside at grade, shall be made accessible at the exterior as well as the interior so as to provide a safe path of travel to a public way for persons who are disabled. Such egress doors shall be provided with illuminated signage identifying accessibility by the use of the international symbol contained within the "exit" sign (*See* **521 CMR 41.1.3**)

26.2 REVOLVING DOORS

Revolving doors shall not be the only means of passage at an *accessible entrance* or along an *accessible route* unless the revolving door is also *accessible*. An *accessible* door shall be provided adjacent to a revolving door and shall permit the same use pattern.

26.2.1 Whenever the revolving doors are unlocked, the adjacent *accessible* door shall be unlocked.

26.2.2 The adjacent *accessible* door must have hardware that allows *entrance* into the building as well as *egress*.

26.3 TURNSTILES

Turnstiles shall not be the only means of passage at an *accessible entrance* or along an *accessible route*. An *accessible* gate shall be provided adjacent to the turnstile and shall be designed to permit the same use pattern, complying with **521 CMR 26.2.1** and **26.2.2.**

26.00: DOORS AND DOORWAYS

26.4 DOUBLE-LEAF DOORWAYS

A doorway having two independently operated door leaves shall have at least one leaf that meets the requirements of **521 CMR 26.5, Width** and **521 CMR 26.6, Maneuvering Clearance**. That leaf shall be an active leaf.

26.5 WIDTH

All doorways and openings that are required to be *accessible* shall have a *clear* opening of not less than 32 inches (32" = 813mm). *Clear* opening of a door is measured from the face of the stop on the latch side to the face of the door when the door is open 90 degrees. For door types such as bifold, accordion, and pocket, the *clear* opening is measured when the door is in its most fully open position. *See* **Fig. 26b** and **26c**.

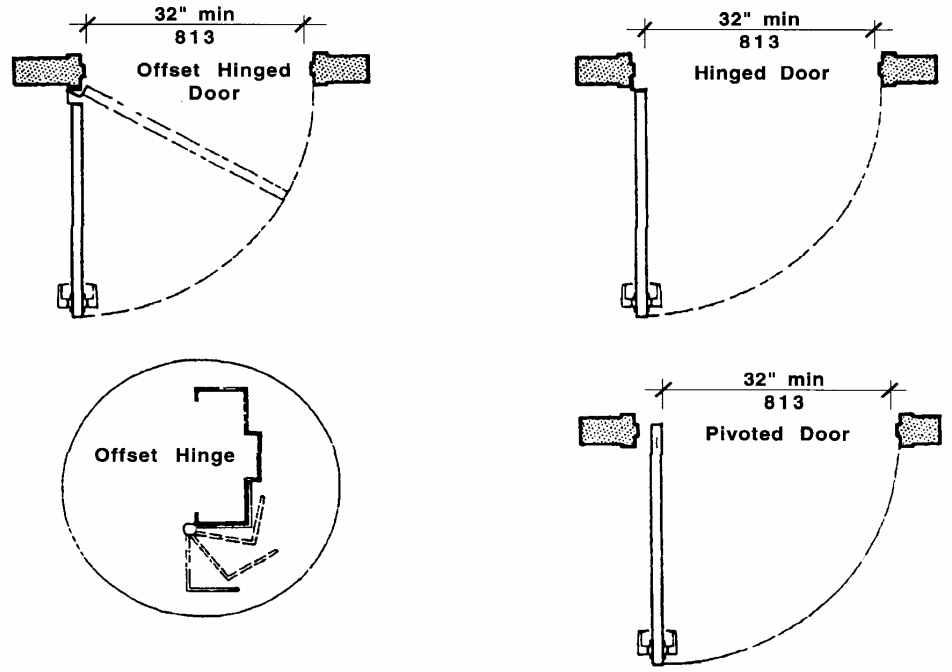

Clear Opening
Figure 26b

NOTE: A standard 36 inch (36" = 914mm) door with a standard hinge, will produce a *clear* opening of at least 32 inches (32"= 813mm).

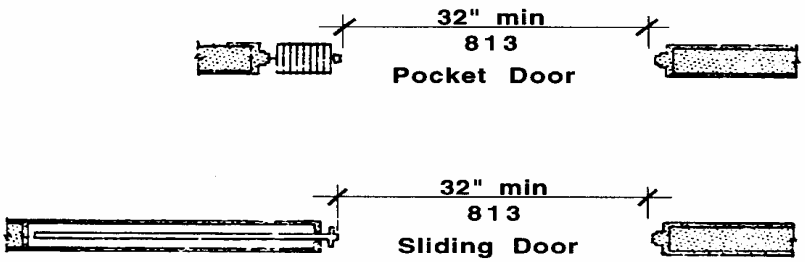

Clear Opening - sliding doors
Figure 26c

26.00: DOORS AND DOORWAYS

26.6 MANEUVERING CLEARANCE

A minimum *clear* floor area shall be provided on both sides of all doors and gates.

Exception: Doors equipped with automatic opening devices are exempt from 521 CMR 26.6.3, 26.6.4 and 26.8

26.6.1 The floor or ground area within the required clearances shall be *level*.

26.6.2 Doors located in a recess of more than 6 inches (6"=152mm) deep shall have *clear floor space* as required in **521 CMR, Section 26.6.3 and 521 CMR Section 26.6.4**. Said *clear floor space* shall be measured within 6 inches (6"=152mm) of the door.

26.6.3 Pull side clearance shall comply with the following:

a. A minimum of 18 inches (18" = 457mm) of *clear* floor space shall be provided on the latch, pull side of the door when the *clear floor space* in front of the door is a minimum of 60 inches (60" = 1524mm). see **Fig. 26d**.
b. A minimum of 42 inches (42" = 10667mm) of *clear floor space* shall be provided on the latch, pull side of the door when the *clear floor space* in front of the door is more than 54 inches (54" = 1372mm) but less than 60 inches (60" = 1524mm) see **Fig. 26g**.
c. A minimum of 24 inches (24" = 610mm) of clear floor space shall be provided on the latch, pull side of the door when the clear floor space in front of the door is a minimum of 54 inches (54"= 1372mm) and the door has a closer. see **Fig. 26d**.

Pull side clearance shall comply with **Fig. 26d**.

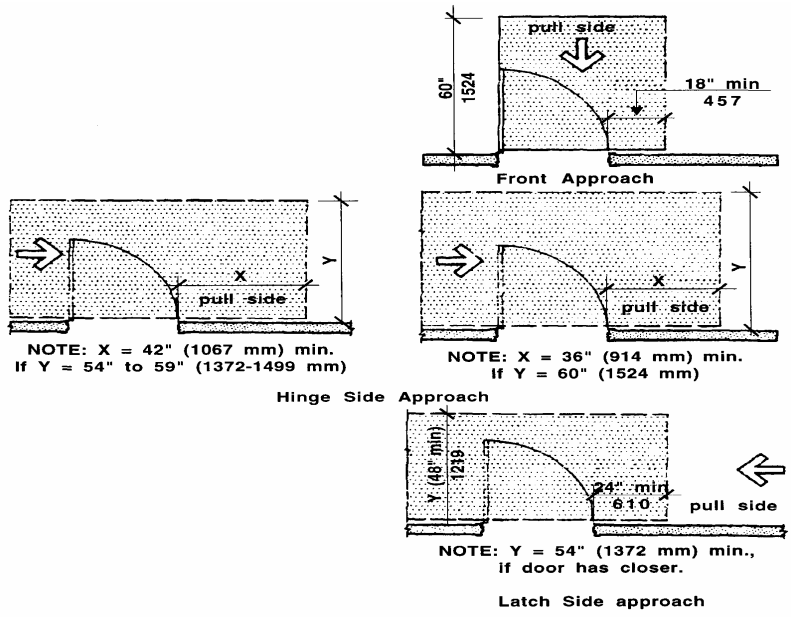

Maneuvering Clearance at Doors (Pull Side)
Figure 26d

26.00: **DOORS AND DOORWAYS**

26.6.4 Push side clearance shall comply with **Fig. 26e**.

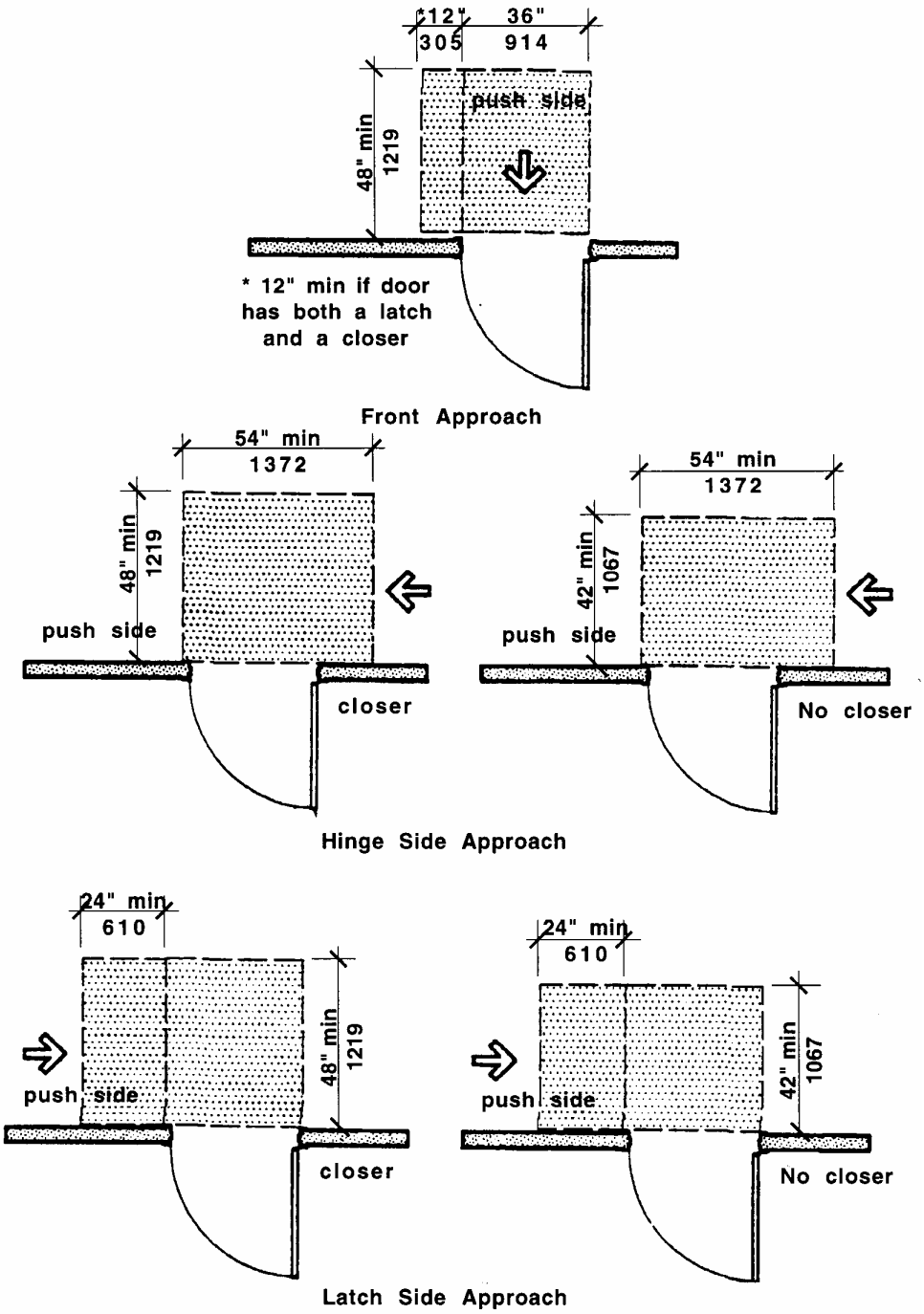

Maneuvering Clearance at Doors (Push Side)
Figure 26e

26.00: **DOORS AND DOORWAYS**

26.6.5 Clearance for sliding door shall comply with **Fig. 26f.**

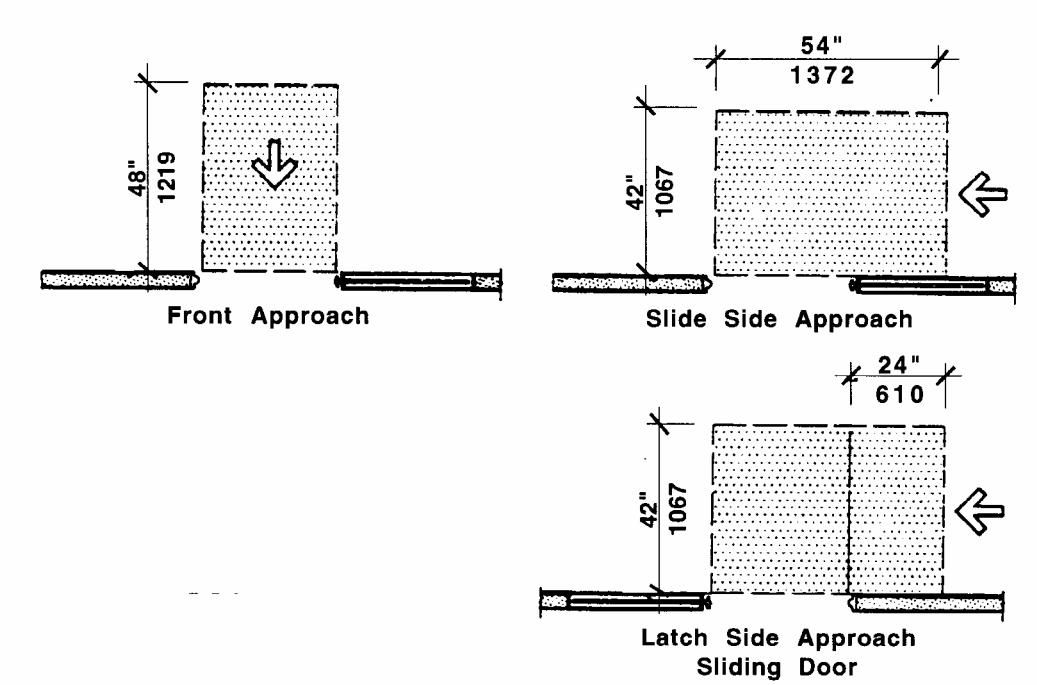

Maneuvering Clearances at Sliding Doors
Figure 26f

26.6 **MANEUVERING CLEARANCE**

A minimum *clear* floor area shall be provided on both sides of all doors and gates:

Exception: Doors equipped with automatic opening devices are exempt from **521 CMR 26.6.3, 26.6.4 and 26.8**

26.7 **TWO DOORS IN SERIES**

The minimum *space* between two hinged or pivoted doors in series shall be 48 inches (48" = 1219mm) plus the width of any door swinging into the *space*. Doors in series shall swing either in the same direction or away from the *space* between the doors. *See* **Fig. 26g**.

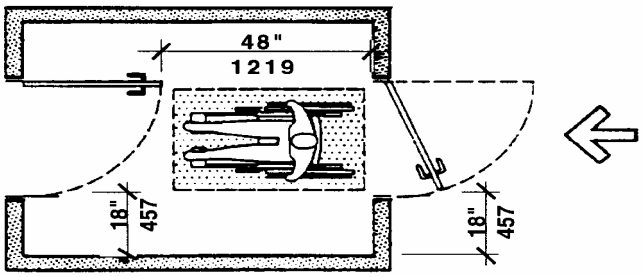

Vestibule Clearances
Figure 26g

26.00: DOORS AND DOORWAYS

26.8 DOOR OPENING FORCE

The maximum force for pushing or pulling open a door shall be as follows:

26.8.1 Doors: These forces apply only to opening the door, not to the effort required to retract latch bolts or disengage other devices that may hold the door in a closed position.

a. exterior hinged doors: 15 lbs.
b. interior hinged doors: five lbs.
c. sliding or folding doors: five lbs.

Exception: Fire doors shall have the minimum opening force allowable by the appropriate *administrative authority*.

26.8.2 Compensating devices: Doors requiring greater force shall be equipped with compensating devices to reduce the operating force, or shall be equipped with automatic opening devices.

26.9 DOOR CLOSERS

If a door has a closer, then the sweep period of the closer shall be adjusted so that from an open position of 90 degrees, the door will take at least six seconds to close.

26.10 THRESHOLDS

Thresholds at doorways shall comply with the following (*See* **Fig. 26h**):

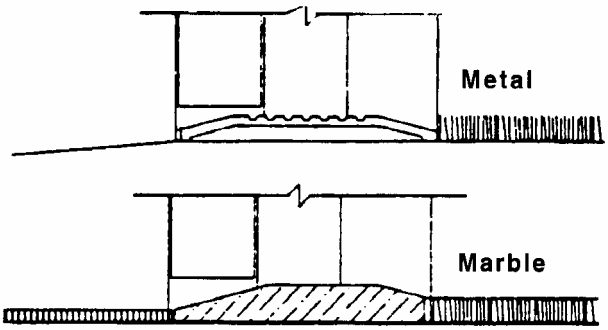

Thresholds
Figure 26h

26.10.1 Thresholds shall not exceed ½ inch (½" = 13mm) in height and shall be beveled on both sides with a slope no greater than one-in-two (1:2) (50%).

26.10.2 Changes in floor finish materials shall have an edge strip or threshold that is beveled at a ratio of one-in-two (1:2) (50%).

26.00: **DOORS AND DOORWAYS**

26.10.3 Exterior sliding door thresholds shall not exceed ¾ of an inch (¾" =19mm) in height and shall be beveled both sides with a slope no greater than one-in-four (1:4) (25%).

26.11 **DOOR HARDWARE**
Shall comply with the following:

26.11.1 Type: Handles, pulls, latches, locks, and other operating devices on *accessible* doors shall have a shape that is easy to operate with one hand and that does not require tight grasping, tight pinching, or twisting of the wrist to operate. Lever-operated mechanisms, push-type mechanisms, and U-shaped handles are acceptable designs. When sliding doors are fully open, operating hardware shall be exposed and usable from both sides.

26.11.2 Height: Hand-operated door opening hardware shall be located 36 inches to 48 inches (36" to 48" = 914mm to 1219mm) above the floor. *See* **Fig. 26i**

26.11.3 Operation: Doors in the *means of egress* shall be operable with one hand and with a single effort. Doors in the paths of ingress shall be able to be unlocked and opened with one hand.

26.11.4 Special hardware: Doors opening into hazardous areas shall have door-opening hardware which is knurled or has a roughened surface to give tactile warning to persons with visual impairments. Hazardous areas shall include but not be limited to loading platforms, boiler rooms, and electrical equipment rooms.

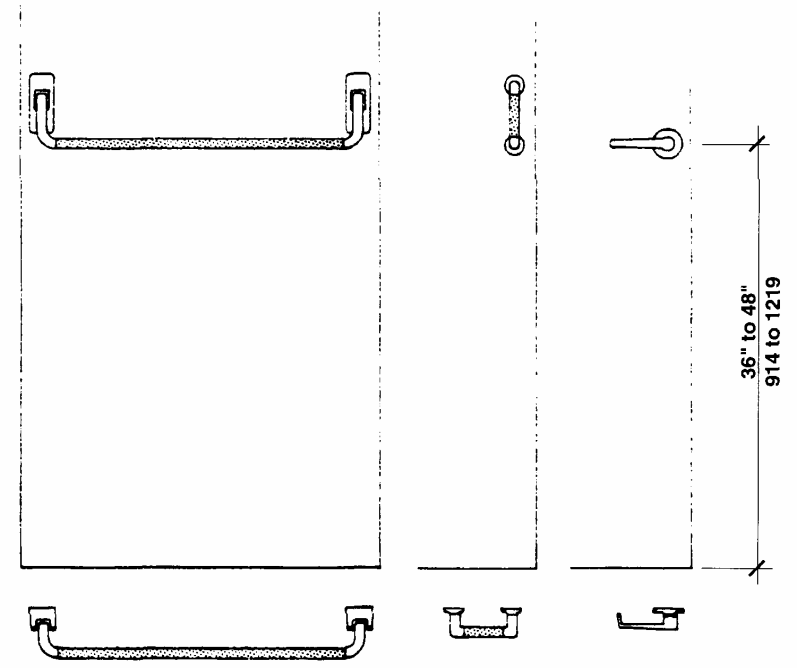

Door Hardware
Figure 26i

521 CMR 27.00: STAIRS

27.1 GENERAL

All stairs are required to comply with the following:

27.2 TREADS AND RISERS

On any given flight of stairs, all steps shall have uniform riser heights and uniform tread widths. Open risers are not permitted. *See* **Fig. 27a**.

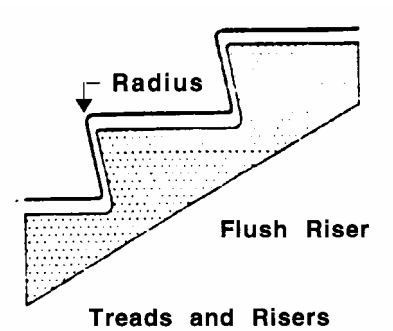

Treads and Risers
Figure 27a

27.3 NOSINGS

The undersides of nosings shall not be abrupt. The radius of curvature at the leading edge of the tread shall be no greater than ½ inch (½" = 13mm). Risers shall be sloped or the underside of the nosing shall have an angle not less than 60 degree from the horizontal. Nosings shall project no more than 1½ inches (1½" = 38mm). *See* **Fig. 27b**.

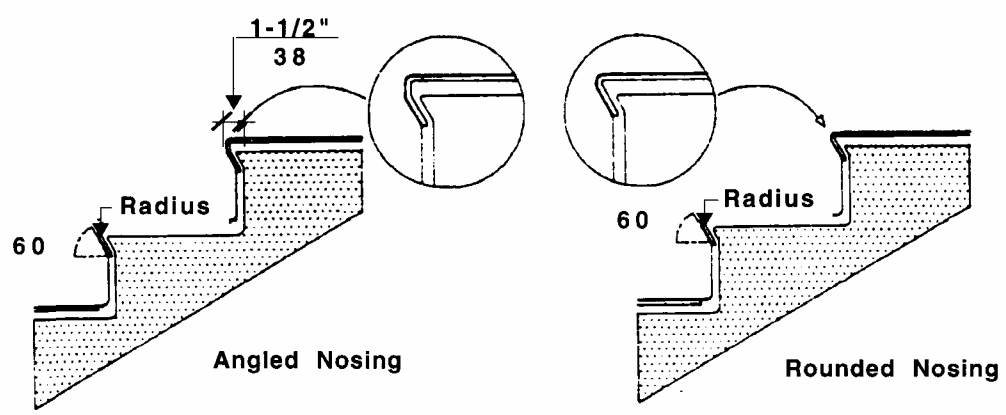

Nosings
Figure 27b

27.00: **STAIRS**

27.4 **HANDRAILS**

Handrails shall have the following features:

27.4.1 Location: Stairways shall have continuous handrails at both sides of all stairs. The inside handrail on switchback or dogleg stairs shall always be continuous. *See* **Fig. 27c**.

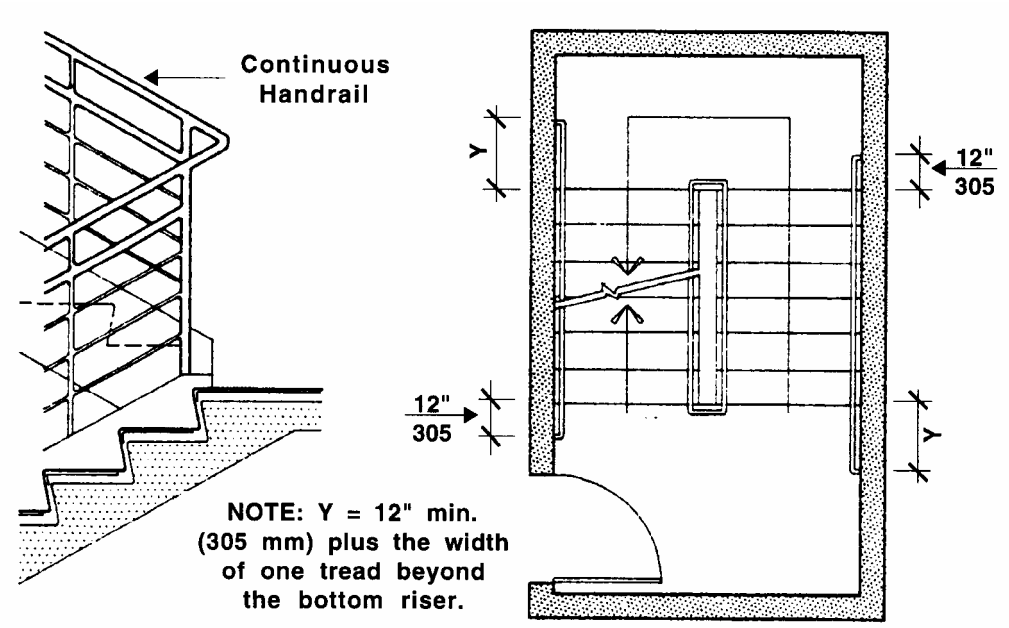

Handrails
Figure 27c

27.4.2 Height: Top of handrail gripping surface shall be mounted between 34 inches (34" = 864mm) and 38 inches (38" = 965mm) above stair nosings. Handrails shall be measured vertically from the top of the gripping surface of the handrails to the stair nosing.

27.4.3 Extensions: Where handrails terminate at the top and bottom of a stair run, they shall have extensions that comply with the following:

a. At the top, extend at least 12 inches (12" = 305mm) beyond the top riser and parallel with the floor or ground surface. *See* **Fig. 27d**.

27.00: **STAIRS**

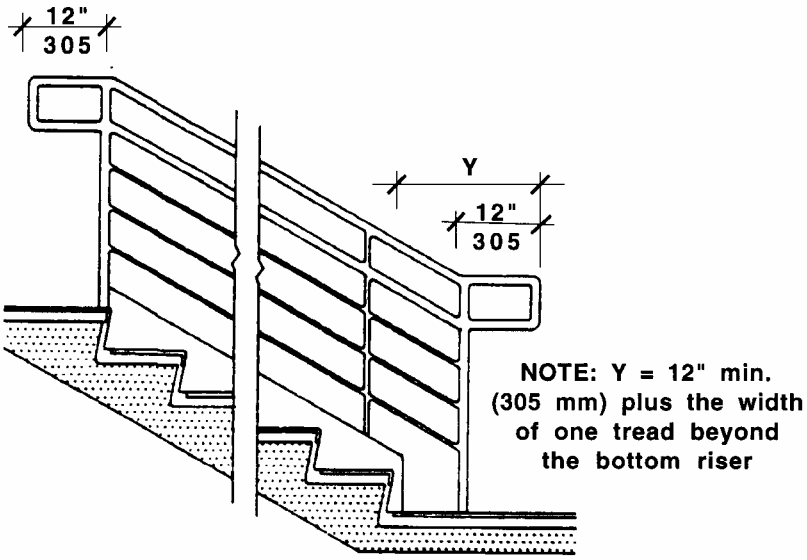

Handrail Extensions
Figure 27d

b. At the bottom, extend at least 12 inches (12" = 305mm) plus the width of one tread beyond the bottom riser. The handrail shall continue to slope for a distance of the width of one tread from the bottom riser; the remainder of the extension shall be horizontal. *See* **Fig. 27d**.
c. Handrail extensions need not extend if it would cause a safety hazard or if *space* does not permit. Extensions shall comply with **521 CMR 20.6, Protruding Objects**.

27.4.4 Size: Handrails shall have a circular cross section with an outside diameter of 1¼ inches (32mm) minimum and two inches (51mm) maximum.

27.4.5 Shape: The handgrip portion of the handrail shall be round or oval in cross-section. *See* **Fig. 27e**.

27.00: **STAIRS**

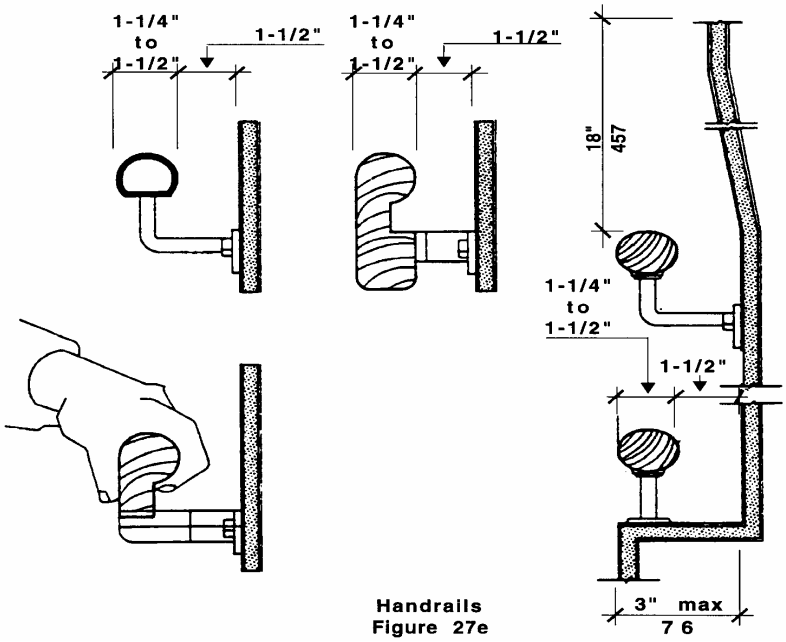

Handrails
Figure 27e

27.4.6 Surface: The gripping surface shall be continuous so that a hand can move from end to end without interruption by newel posts or other obstructions, and shall be free of any sharp or abrasive *elements*.

27.4.7 Clearance: When a handrail is mounted adjacent to a wall, the *clear space* between the handrail and the wall shall be 1½ inches (1½" = 38mm). Handrails may be located in a wall recess if the recess is a maximum of three inches (3" = 76mm) deep and extends at least 18 inches (18" = 457mm) above the top of the rail.

27.4.8 End condition: Ends of handrails shall be either rounded or returned smoothly to floor, wall, or post. Extensions on handrails which are not attached to walls shall be returned smoothly to the floor or a post.

27.4.9 Handrails shall not rotate within their fittings.

27.5 **DETECTABLE WARNINGS AT STAIRS**: Reserved until further notice.

27.6 **OUTDOOR CONDITIONS**

Outdoor stairs and their approaches shall be designed so that water will not accumulate on walking surfaces.

521 CMR 28.00: **ELEVATORS**

28.1 **GENERAL**

In all multi-*story buildings* and *facilities*, each level including *mezzanines*, shall be served by a passenger elevator. If more than one elevator is provided, each passenger elevator shall comply with 521 CMR 28. *Accessible* elevators shall be on an *accessible route* and located within the *space* with which it is intended to serve. **Elevators are not required under the following exceptions**.

a. Buildings having only two *levels* may provide an interior *accessible ramp* complying with **521 CMR 24.00: RAMPS** in lieu of an elevator.
b. *Buildings* having only two levels, in which each *level* serves an unrelated use and in which there is no internal stair, do not require an elevator if each level is *accessible*.
c. Freight elevators shall not be required to meet the requirements of **521 CMR 28.00** unless the only elevators provided are used as combination passenger and freight elevators for the public and employees.
d. Elevator pits, elevator penthouses, mechanical rooms, and piping or equipment catwalks shall not be required to meet the requirements for elevator access.
e. Where platform lifts are allowed to be installed in lieu of an elevator as per **521 CMR 28.12, Wheelchair Lifts/Limited Use Elevators**.
f. *Multiple dwellings* where all *accessible* rooms and all public use and *common use* spaces are on the *accessible level*.
g. *Transient lodging facilities* of less than three stories in height and where all *accessible* rooms and all public and *common use* spaces are on the *accessible* level.

28.1.2 The elevator exceptions set forth above do not obviate or limit in any way the obligation to comply with the other accessibility requirements of 521 CMR. For example, floors above or below the *accessible ground floor* must meet the requirements of 521 CMR except for elevator service. If toilet or bathing facilities are provided on a level not served by an elevator, then toilet or bathing facilities must be provided on the *accessible ground floor*.

28.1.3 A passenger elevator that provides service from a garage to only one level of a *building* or *facility* is not required to serve other levels.

28.2 **OPERATION**

Elevator operation shall be automatic.

28.2.1 Self Leveling: Each car shall be equipped with a self-leveling feature that is automatic and independent of the operating device and shall correct any overtravel or undertravel.

28.2.2 The self-leveling feature shall bring the car to a position level with floor landings under all loading conditions from zero to the rated limit. A tolerance of ½ inch (½" = 13mm) shall be permitted.

28.00: **ELEVATORS**

28.3 **HALL CALL BUTTONS**
Shall comply with the following:

28.3.1 Call buttons in elevator lobbies and halls shall be centered at 42 inches (42" = 1067mm) above the floor. *See* **Fig. 28a**.

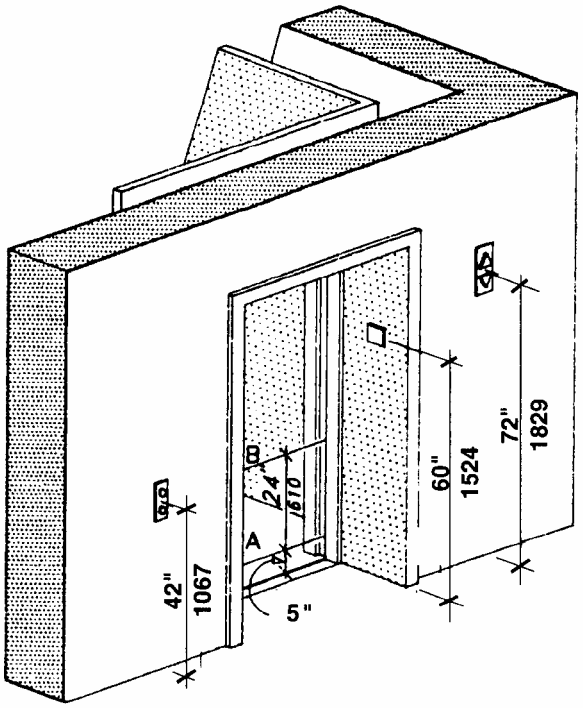

Hall Buttons
Figure 28a

28.3.2 Such call buttons shall have visual signals to indicate when each call is registered and when each call is answered.

28.3.3 Call buttons shall be a minimum of ¾ of an inch (¾" = 19mm) in the smallest dimension. The button designating the up direction shall be on top. Buttons shall be raised or flush.

28.3.4 Objects mounted beneath hall call buttons shall not project into the elevator lobby more than four inches (4" = 102mm).

Note: The automatic door reopening device is activated if an object passes through either line A or line B. Line A and line B represent the vertical locations of the door reopening device not requiring contact.

28.4 **HALL LANTERNS**
A visible and audible signal shall be provided at each hoistway *entrance* to indicate which car is answering a call. Lanterns shall comply with the following:

28.00: **ELEVATORS**

28.4.1 Hall lantern fixtures shall be mounted so that their centerline is at least 72 inches (72" = 1829mm) above the lobby floor. *See* **Fig. 28a.**

28.4.2 Audible signals shall sound once for the up direction and twice for the down direction or shall have verbal annunciators that say "up" and "down."

28.4.3 Visible signals shall have the following features:

a. Visual elements shall be at least 2½ inches (2½" = 64mm) in the smallest dimension.
b. Signals shall be visible from the vicinity of the hall call button. *See* **Fig. 28a**. In-car lanterns located in cars, visible from the vicinity of hall call buttons, and conforming to the above requirements, shall be acceptable.

28.5 **DOOR JAMB MARKINGS**
Both jambs of all elevator hoistway *entrances* shall have raised and *Braille* floor designation jambs that are visible from within the car and the elevator lobby.

28.5.1 The centerline of the characters shall be 60 inches (60" = 1524mm) above finish floor. *See* **Fig. 28a**.

28.5.2 Such characters shall be two inches (2" = 51mm) high and on a contrasting color background.

28.5.3 Permanently applied plates are acceptable if they are secured to the jambs.

28.6 **DOORS**
Elevator doors shall open and close automatically and shall comply with the following:

28.6.1 Width: Elevator doors shall provide a clear opening that is at least 32 inches (32" = 813mm) wide.

28.6.2 Closing Speed: Doors shall close at a maximum speed of approximately one foot (1' = 305mm) per second.

28.6.3 Reopening Device: A door reopening device shall be provided that will stop and reopen a car door and an adjacent hoistway door automatically if the car door becomes obstructed by an object or person while closing.

a. The device shall be capable of completing these operations without requiring contact with the obstruction.
b. The reopening device shall detect possible obstructions passing through the opening at heights of five inches and of 29 inches (5" = 127mm and 29" = 737mm) above finish floor. *See* **Fig. 28a**.

28.00: **ELEVATORS**

c. Door reopening devices shall remain effective for at least 20 seconds. After such an interval, doors may close in accordance with the requirements of ASME A17.1-1990 and, if applicable, with 524 CMR: the Board of Elevator Regulations.

28.6.4 Door and Signal Timing for Hall Calls: Doors and signals shall be coordinated to comply with the following:

a. The minimum acceptable time from notification that a car is answering a call until the doors of that car start to close shall be calculated from the following equation:

T = D/(1.5 ft/s)
or

T = D/(457 mm/s)

T = total time in seconds

D = distance (in feet or millimeters) from a point in the lobby or corridor 60 inches (60" = 1524mm) directly in front of the farthest call button controlling that car to the centerline of its hoistway door. *See* **Fig. 28b**.

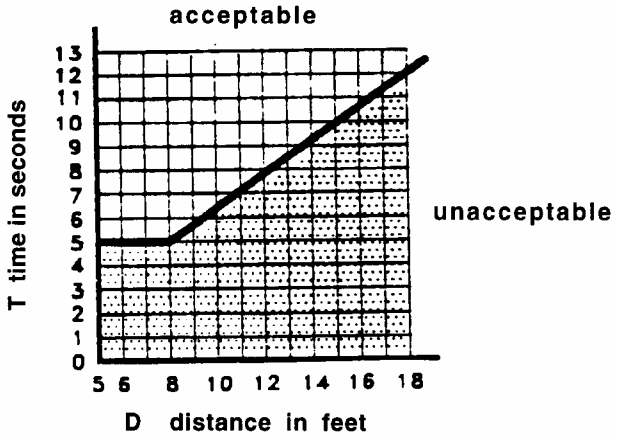

Graph of Timing Equation
Figure 28b

For cars with in-car lanterns, "T " begins when the lantern is visible from the vicinity of hall call buttons and an audible signal is sounded.

b. The minimum acceptable notification time shall be five seconds.

28.00: **ELEVATORS**

28.6.5 Door Delay for Car Calls: The minimum time for elevator doors to remain fully open in response to a car call shall be three seconds.

28.7 **ELEVATOR CAR**

The elevator cab shall be a minimum of 54 inches by 68 inches (54" x 68" = 1372mm x 1727mm) measured wall-to-wall and wall-to-door, or may be 60 inches by 60 inches, (60" by 60" = 1524mm by 1524mm) wall-to-wall and wall to wall. The door can be located on any wall or walls.

Exception: In existing *buildings*, where existing shaft configuration prohibits strict compliance with **521 CMR 28.7**, the maximum car size allowable for the existing shaft shall be provided, but in no case shall the inside car area be smaller than 48 inches by 48 inches, wall-to-wall and wall-to-door.

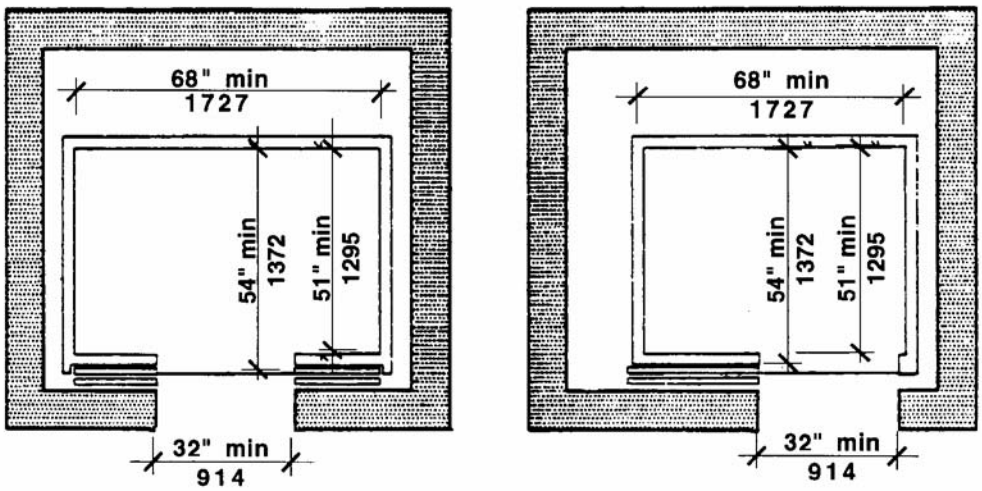

Minimum Elevator Cab Size
Figure 28c

28.7.1 Hoistway Clearance: The horizontal clearance between the car platform sill and the edge of any hoistway landing shall be no greater than 1¼ inch (1¼" = 32mm).

28.7.2 Handrails shall be located on at least one wall in every elevator between 32 and 36 inches (32" and 36" = 813mm and 914mm) above the car floor, with a 1½ inch (1½" = 38mm) clearance from the wall.

28.7.3 Floor surface: Floor surfaces shall comply with **521 CMR 29.00: FLOOR SURFACES**.

28.00: **ELEVATORS**

28.8 **CAR CONTROLS**

Elevator control panels shall have the following features:

28.8.1 Location: If cars have center opening doors, controls shall be located on the same wall or walls. If cars have side opening doors, controls shall be located at the side wall or at the front wall next to the door. *See* **Fig. 28d**.

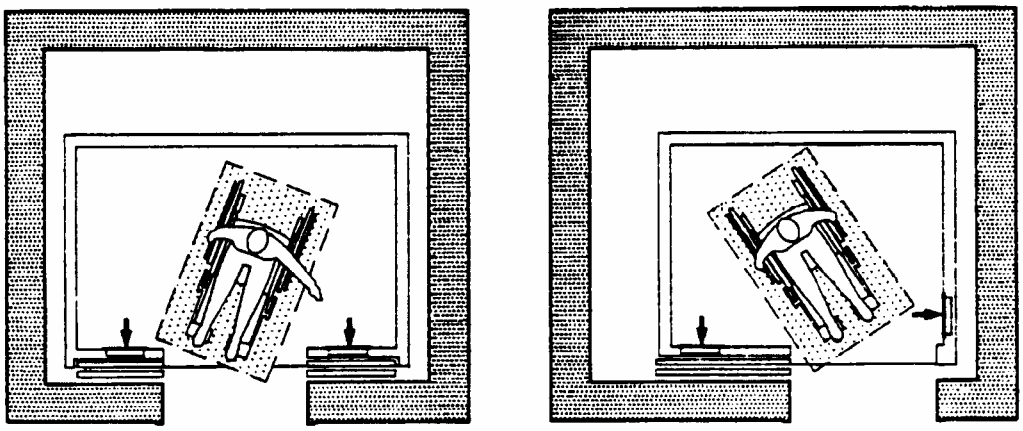

Alternate Locations of Panel with Center Opening Door

Alternate Locations of Panel with Side Opening Door

Elevator Car Control Locations
Figure 28d

28.8.2 Height: All floor buttons shall be no higher than 54 inches (54" = 1372mm) above the finish floor for side approach and 48 inches (48" = 1219mm) for front approach. Emergency controls, including the emergency alarm and emergency stop, shall be grouped at the bottom of the panel and shall have their centerlines no less than 35 inches (35" = 889mm) above the finish floor. *See* **Fig. 28e** and **28f**.

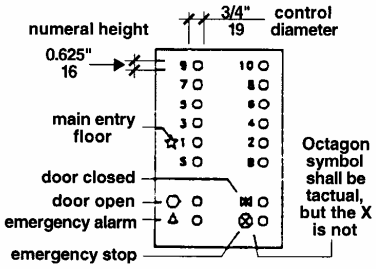

Car Controls
Figure 28e

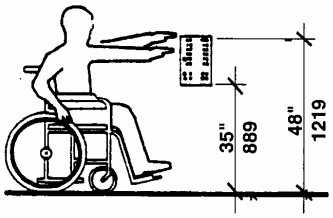

Car Control Heights
Figure 28f

28.00: **ELEVATORS**

28.8.3 Buttons: All control buttons shall be at least ¾ of an inch (¾" = 19mm) in their smallest dimension. They shall be raised or flush.

28.8.4 Tactile, *Braille*, and Visual Control Indicators: All control buttons shall be designated by *Braille* and by raised standard alphabet characters for letters, arabic characters for numerals, or standard symbols as shown in **Fig. 28e**.

a. Raised and *Braille* characters and symbols shall comply with **521 CMR 41.00: SIGNAGE**.
b. The call button for the main entry floor shall be designated by a raised star at the left side of the floor designation. *See* **Fig. 28e**.
c. All raised designations for control buttons shall be placed immediately to the system shall be placed immediately to the left of the button to which they apply.
d. Applied plates, permanently attached, are an acceptable means to provide raised control designations.
e. Floor buttons shall be provided with visual indicators to show when each call is registered. The visual indicators shall be extinguished when each call is answered.

28.9 **CAR POSITION INDICATORS**

In elevator cars, a visual car position indicator shall be provided in compliance with the following:

28.9.1 Location: The car position indicator shall be located above the car control panel or over the door to show the position of the elevator in the hoistway.

28.9.2 Visual and Audible: As the car passes or stops at a floor served by the elevators, the corresponding numerals shall illuminate and an audible signal shall sound.

a. Numerals shall be a minimum of ½ inch (½" = 13mm) high and shall be illuminated on a contrasting background.
b. The audible signal shall be no less than 20 decibels with a frequency no higher than 1500 Hz.
c. An automatic verbal announcement of the floor number at which a car stops or which a car passes may be substituted for the audible signal.

28.10 **EMERGENCY COMMUNICATIONS**

Where a service location is maintained in a *building*, a two-way emergency communication system shall be provided between the elevator car and the service location.

28.10.1 The highest operable part of a two-way communication system shall be a maximum of 48 inches (48" = 1219mm) from the floor of the car.

28.10.2 It shall be identified by a raised symbol and lettering complying with **521 CMR 41.00, SIGNAGE**, and located adjacent to the device.

28.00: **ELEVATORS**

28.10.3 The emergency intercommunication system shall not require voice communication. Lights that indicate that emergency contact has been made and is being responded to would meet this requirement.

28.10.4 If the system uses a handset, the length of the cord from the panel to the handset shall be at least 29 inches (29" = 737mm). Said handsets shall be equipped with hearing amplification.

28.10.5 If the system is located in a closed compartment the compartment door hardware shall conform to **521 CMR 39.00, CONTROLS**.

28.11 **ILLUMINATION LEVELS**
The *level* of illumination at the car controls, platform, car threshold and landing sill shall be at least five footcandles (53.8 lux).

28.12 **WHEELCHAIR LIFTS/ LIMITED USE ELEVATORS**:
Platform lift devices, shall comply with the following:

28.12.1 General: Vertical wheelchair lift devices and Limited use elevators may be used as a part of an *accessible route* of travel in lieu of an elevator under any of the following circumstances.

a. To provide an *accessible route* to a performing area (stage) in an assembly occupancy.
b. To comply with the wheelchair viewing position line-of-sight and dispersion requirements of **521 CMR 14.4.1**.
c. In existing buildings where no other work is being performed, except for the installation of a vertical wheelchair lift.
d. In existing *buildings* of less than three *stories* in height or that have less than 3000 square feet per *story* unless the *building* is a shopping center, a shopping mall, or the professional office of a health care provider.
e. To provide vertical access where the distance between floors is less than a full *story* and where a *ramp* is not feasible.

28.12.2 Vertical wheelchair lifts shall comply with the following:

a. **521 CMR 24.4, Landings**, **521 CMR 29.00: FLOOR SURFACES**, and **521 CMR 39:00 CONTROLS**;
b. Platform size shall be a minimum of 36 inches wide by 54 inches deep (36" by 54" = 914mm by 1372mm)
c. The wheelchair lift shall be recessed into the floor, at all levels, so that it is flush with the finished floor or grade. Where recessing the lift is not possible and a *ramp* must be used, the *ramp* shall comply with **521 CMR 24.00: RAMPS**.
d. If the wheelchair lift is key operated, a buzzer and intercom system must be installed at the lift and connected to a location within the building where the key is maintained.

28.00: **ELEVATORS**

e. Doors or gates shall comply with the requirements of **521 CMR 26.5** through **521 CMR 26.11.4**. Exception: Where a door or gate is provided in the wider side of any lift platform that is less that 54 inches (54" = 1372mm) in any dimension, the door or gate shall be a minimum of 42 inches (42" = 1067mm) wide and shall comply with the applicable requirements of **521 CMR 26.6** through **521 CMR 26.11.4**.
f. Wheelchair lifts must be permanently installed and maintained in operating condition at all times.

28.12.3 Limited use elevators shall comply with the following:

a. The cab size shall be a minimum of 36 inches wide by 60 inches deep (36" by 60" = 914mm by 1524mm) with the door opening on the 36 inch (36" = 914mm) side.
b. The interior elevator door or gate shall be automatic.
c. The exterior doors shall comply with **521 CMR 26.00: DOORS AND DOORWAYS**.
d. The elevator meet all other requirements of **521 CMR 28.2 through 28.6** and **521 CMR 28.8 through 28.11.**

28.12.4 Inclined wheelchair lifts may be used as a part of an *accessible route* of travel in lieu of an elevator only under the following circumstances.

a. To provide an *accessible route* to a performing area (stage) in an assembly occupancy.
b. In an existing *building* where no other work is being performed and no other alternative is available such as a vertical wheelchair lift, limited use elevator or a *ramp*.

28.12.5 Inclined wheelchair lifts shall comply with the following:

a. The platform shall be a minimum of 30 inches wide by 48 inches long (30" by 48" = 762mm by 1219mm).
b. A permanent folding seat shall be provided on the lift.
c. If the wheelchair lift is key operated, a buzzer and intercom system must be installed at the lift and connected to a location within the *building* where the key is maintained.
d. All controls and operating mechanisms shall comply with **521 CMR 39.00: CONTROLS**.
e. Inclined wheelchair lifts must be permanently installed and maintained in operating condition at all times.
f. Clear floor space must be provided at all entry and exit locations to the inclined wheelchair lift in accordance with the clear floor space requirement as cited in 521 CMR 26.6.3 and 26.6.4.

521 CMR 29.00: **FLOOR SURFACES**

29.1 GENERAL

Ground and floor surfaces including floors, *walks*, *ramps*, and *curb cuts* shall be stable, firm, slip resistant, and maintained with materials that ensure continued slip resistance.

29.2 **LEVEL CHANGES**

Ground and floor surfaces shall be of a common *level* throughout, except for the following permitted changes in *level*.

29.2.1 Changes in *level* up to and including ¼ inch (¼" = 6mm) may be vertical and without edge treatment. See **Fig. 29a**.

29.2.2 Changes in *level* greater than ¼ inch (¼" = 6mm) and less than ½ inch (½" = 13mm) shall be beveled with a slope no greater than one-in-two (1:2) (50%). See **Fig. 29a**.

29.2.3 Changes in *level* greater than ½ inch (½" = 13mm) are not allowed unless a *ramp*, *walkway*, or means of vertical access complying with 521 CMR is provided.

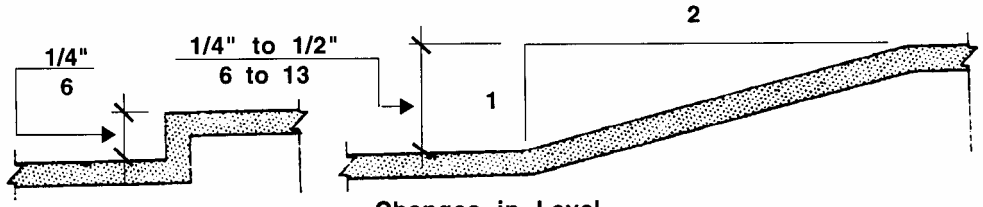

Changes in Level
Figure 29a

29.3 **CARPET**

When carpet or carpet tile is used on a ground or floor surface, it shall comply with the following:

29.3.1 Material: Carpet material shall be high density, non-absorbent, and the maximum pile thickness shall be ½ inch (½" = 13mm).

29.3.2 Installation: Carpet shall be adhered directly to the floor or shall be stretched tautly and securely fastened to floor surfaces at all edges.

29.3.3 Exposed edges: Edges of carpet exposed to traffic shall have trim along the entire length of the exposed edge. Edges perpendicular to the path of travel shall have edging strips no higher than _ of an inch (_" = 10mm) above the floor and shall have a beveled edge with a slope no greater than one-in-two (1:2) (50%).

29.3.4 Padding: If padding is installed, it shall not exceed ¼ of an inch (¼" = 6mm) in thickness and shall be secured taut to the floor.

29.00: FLOOR SURFACES

29.4 GRATINGS

If gratings are located in walking surfaces, then they shall have *spaces* no greater than ½ inch (½" = 13mm) wide in one direction. If gratings have elongated openings, then they shall be placed so that the long dimension is perpendicular to the dominant direction of travel. See **Fig. 29b**.

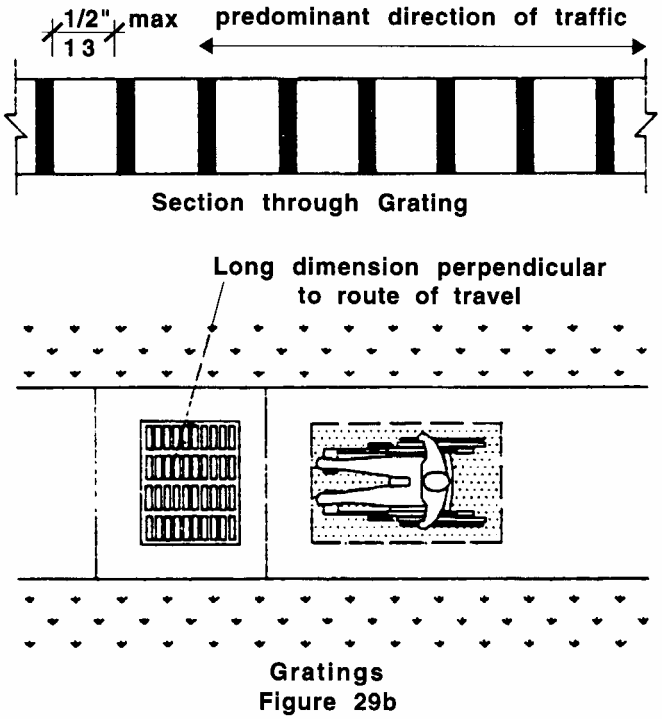

Gratings
Figure 29b

521 CMR 30.00: PUBLIC TOILET ROOMS

30.1 GENERAL

Each public toilet room provided on a *site* or in a *building* shall comply with 521 CMR.

a. In each adult public toilet room, at least one water closet and one sink in each location shall be *accessible* to persons in wheelchairs, or a separate *accessible* unisex toilet room shall be provided at each location. Adult water closets shall comply with the provisions of **521 CMR 30.1 through 30.13**.
b. Where children's toilet rooms are provided, at least one water closet and one sink in each location shall be *accessible* to children in wheelchairs, or a separate *accessible* unisex toilet room shall be provided at each location. Children's toilet rooms shall comply with the provisions of **521 CMR 30.14 through 30.20.** For purposes of 521 CMR, pre-kindergarten school is defined as a school which serves children from infancy up until but not including kindergarten. Elementary school is defined as a school which serves grades kindergarten through six.

30.1.1 The installation of unisex toilet room in *lieu* of fully *accessible* men's and women's room is permitted by 521 CMR. *See* also **521 CMR 30.2, Location**.

30.1.2 Portable Toilets: For single user portable toilets clustered at a single location, at least 5% but not less than one accessible toilet unit shall be installed at each cluster. *Accessible* units shall be identified by the International Symbol of Accessibility. Portable units at construction sites used exclusively by *construction* personnel are not required to be *accessible*.

30.2 LOCATION

Accessible toilet rooms shall be on an *accessible route*. Where unisex toilet room(s) are provided, they shall be located in the same area as other toilet rooms.

30.3 VESTIBULES

Where vestibules are provided, they shall comply with **521 CMR 25.3, Vestibules**.

30.4 DOORS TO SINGLE USER TOILET ROOMS

Doors to single user toilet rooms may swing into the room if the door has a self-closing device and maneuvering space is provided in accordance with **521 CMR 26.6**. The door may swing into the room if there is a clear floor space of 30 inches by 48 inches (30" = 762mm by 48" = 1219mm) beyond the swing of the door.

30.5 CLEAR FLOOR SPACE

An unobstructed turning *space* complying with **521 CMR 6.3, Wheelchair Turning Space** shall be provided within an *accessible* toilet room. The *clear floor space* at fixtures and controls, the *accessible route*, and the turning *space* may overlap.

30.00: **PUBLIC TOILET ROOMS**

30.6 **TOILET STALLS**

If toilet stalls are provided, then at least one shall be a standard *accessible* toilet stall. Where six or more stalls are provided in a toilet room, at least one alternate *accessible* toilet stall (*See* **Fig. 30c**) shall be provided in addition to the standard *accessible* toilet stall. *Accessible* toilet stalls shall be on an *accessible route*.

30.6.1 Standard *Accessible* Toilet Stall: Standard *accessible* toilet stalls shall be at least 60 inches (60" = 1524mm) wide and 72 inches (72" = 1829mm) deep. *See* **Fig. 30a and 30b**. Arrangements shown for standard *accessible* toilet stalls may be reversed to allow either a left- or right-hand approach. Water closets in *accessible* stalls shall be located on the 60 inch (60" = 1524mm) wall and shall comply with **521 CMR 30.7, Water closets**.

a. *Accessible* toilet stalls shall have a door that swings out or slides and has a 32 inch (32" = 813mm) clear opening.
b. The stall door shall have an automatic self-closing hinge device, a pull device on both sides of the door to assist in closing and opening the door, and a lock located approximately 36 inches (36" = 914mm) above the floor that does not require tight grasping, pinching, or twisting of the wrist to operate.
c. There shall be 18 inches (18" = 457mm) of clear space on the latch pull side of the door.
d. A coat hook shall be provided at a maximum height of 54 inches (54" = 1372mm) above the floor.

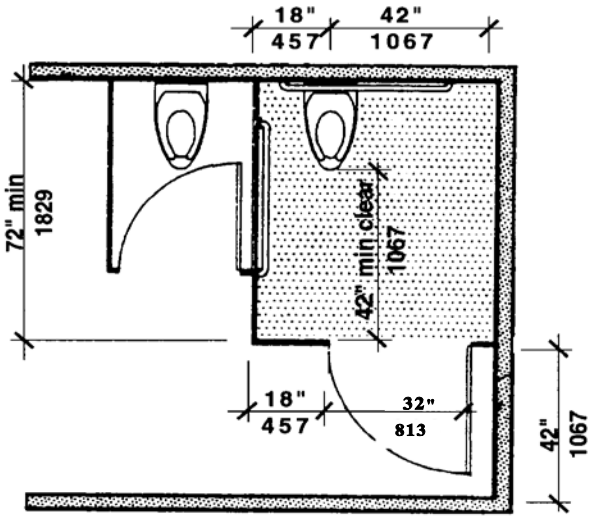

Accessible Toilet Stall (Left Approach)
Figure 30a

30.00: **PUBLIC TOILET ROOMS**

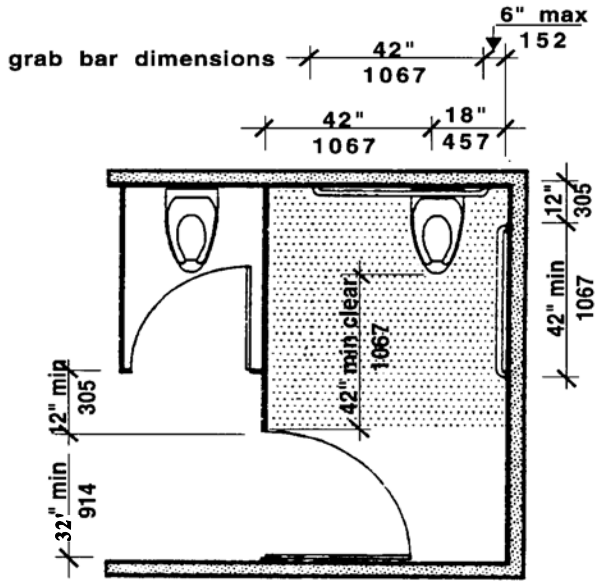

Accessible Toilet Stall (Right Approach)
Figure 30b

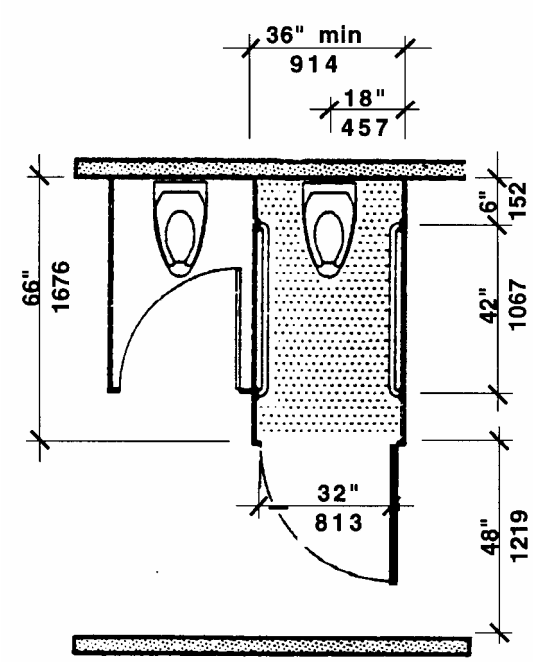

Alternate Accessible Stall
(in addition to accessible stall)
Figure 30c

30.6.2 Alternate *Accessible* Stall: Alternate *accessible* toilet stalls shall be 36 inches (36" = 914mm) wide with an outward swinging, self-closing door and parallel grab bars. *See* **Fig. 30c**.

a. The alternate toilet stall shall have a door that swings out or slides and has a 32 inch (32" = 813mm) clear opening.

30.00: **PUBLIC TOILET ROOMS**

b. The stall door shall have an automatic self-closing hinge device, a pull device on both sides of the door to assist in closing and opening the door, and a lock located approximately 36 inches (36" = 914mm) above the floor that does not require tight grasping, pinching, or twisting of the wrist to operate.
c. A coat hook shall be provided at a maximum height of 54 inches (54" = 1372mm) above the floor.

30.7 **WATER CLOSETS**
That are required to be *accessible* shall comply with the following:

30.7.1 *Clear floor space*: *Clear floor space* for water closets not in stalls shall comply with **Fig. 30d**. *Clear floor space* may be arranged to allow either a left-handed or right-handed approach to the water closet.

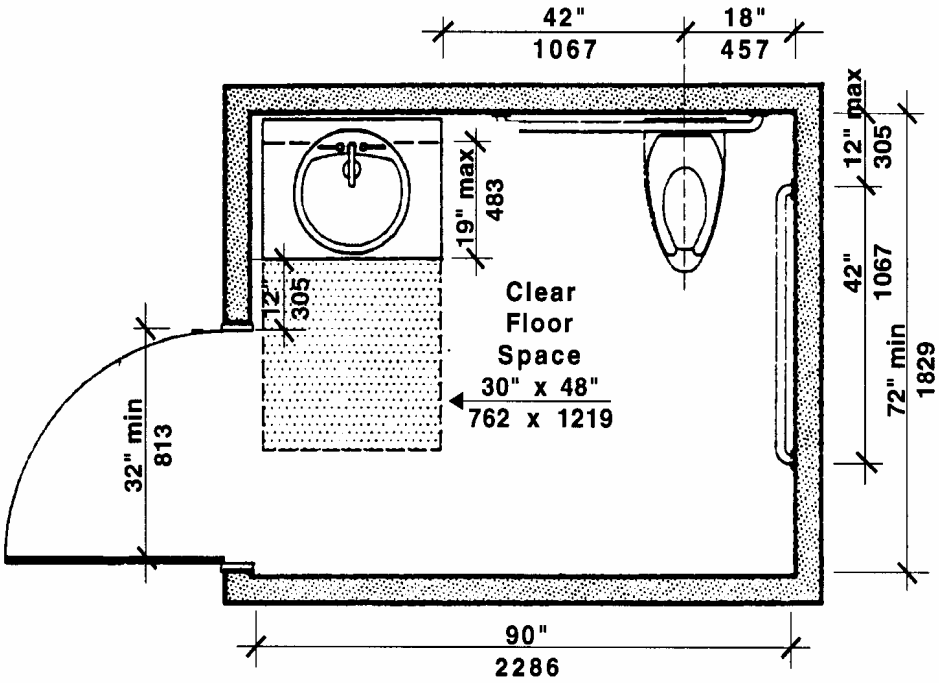

Accessible Unisex Toilet Room
Figure 30d

30.7.2 Location: The centerline of the water closet shall be located 18 inches (18" = 457mm) from the nearest side wall and at least 42 inches (42" = 1067mm) from the farthest side wall or the closest edge of an adjacent fixture. There shall be at least 42 inches (42" = 1067mm) clearance between the front edge of the water closet and the nearest wall or fixture.

30.7.3 Height: Water closets shall be 17 inches to 19 inches (17" to 19" = 432mm to 483mm) high, measured to the top of the water closet seat. *See* **Fig. 30e**.

30.00: **PUBLIC TOILET ROOMS**

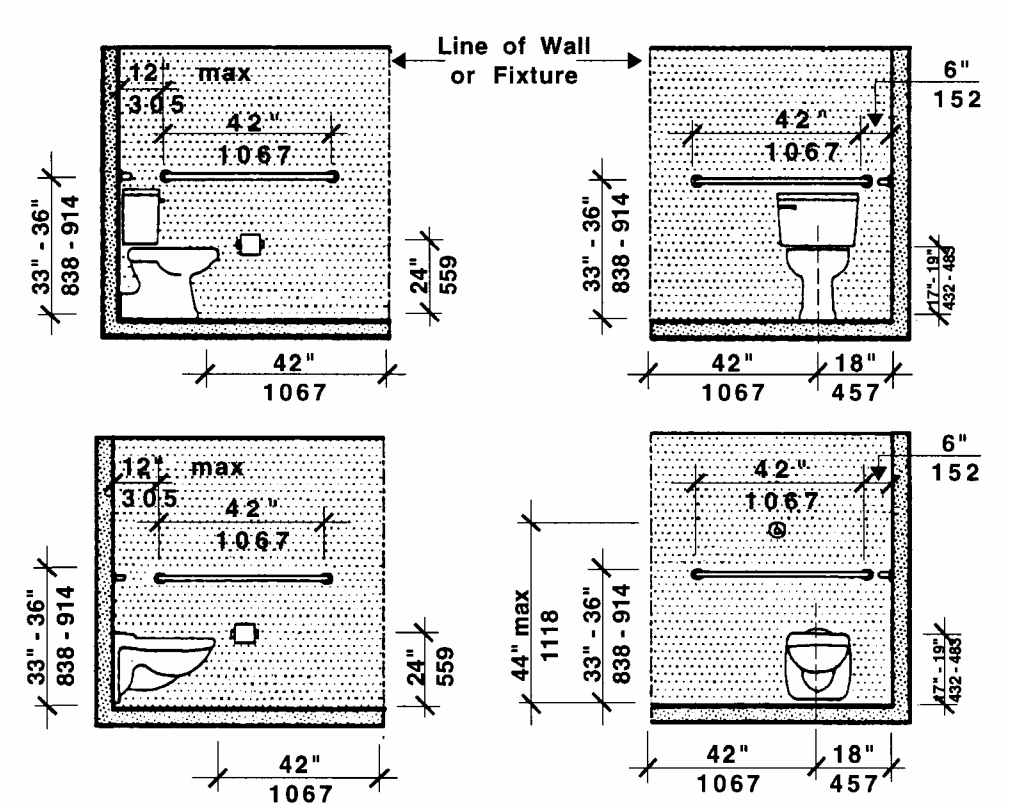

Accessible Toilet Stall Elevations
Figure 30e

30.7.4 Seats: Water closet seats shall not be spring mounted to return to a lifted position.

30.7.5 Flush Controls: Flush controls shall be hand operated or automatic and shall comply with **521 CMR 39.5, Operation**. Controls for flush valves shall be mounted on the wide side of water closet no more than 44 inches (44" = 1120mm) above the floor.

30.7.6 Toilet Paper Dispensers: Toilet paper dispensers shall be located on the side wall closest to the water closet. The centerline of the roll shall be set at a minimum height of 24 inches (24" = 610mm) above the floor. Dispensers that control delivery or that do not permit continuous paper flow are not allowed.

30.8 **GRAB BARS**

For the standard *accessible* toilet stall the water closet shall have two grab bars 42 inches (42" = 1067mm) long, one on the wall in back of the water closet and one on the side wall closest to the water closet.

For the alternate *accessible* toilet stall the water closet shall have two parallel grab bars, 42 inches long (42" = 1067m) installed on the side walls and located a minimum of six inches (6" = 76mm) from the interior corner.

30.00: **PUBLIC TOILET ROOMS**

30.8.1 Location: The side grab bar shall be located a maximum of 12 inches (12" = 305mm) from the interior corner. The rear grab bar shall be located a maximum of six inches (6" = 152mm) from the interior corner.

30.8.2 Height: Grab bars shall be set at a height of 33 to 36 inches (33" to 36" = 838mm to 914mm) above and parallel to the floor. Where a tank prevents location of the rear grab bar, a bar may be installed three inches (3" = 76mm) above the tank. Where a flushometer prevents the location of a 42 inch (42" = 1067mm) rear grab bar, one grab bar, 36 inches (36" = 914mm) shall be installed to the side of the flushometer, located three inches (3" = 76mm) from the closest edge of the flushometer.

30.8.3 Thickness: Grab bars shall be between 1¼ inches and 1½ inches (1¼" to 1½" = 32mm to 38mm) in outside diameter, have a 1½ inch (1½" = 38mm) clearance between the bar and the wall. *See* **Fig. 30f**.

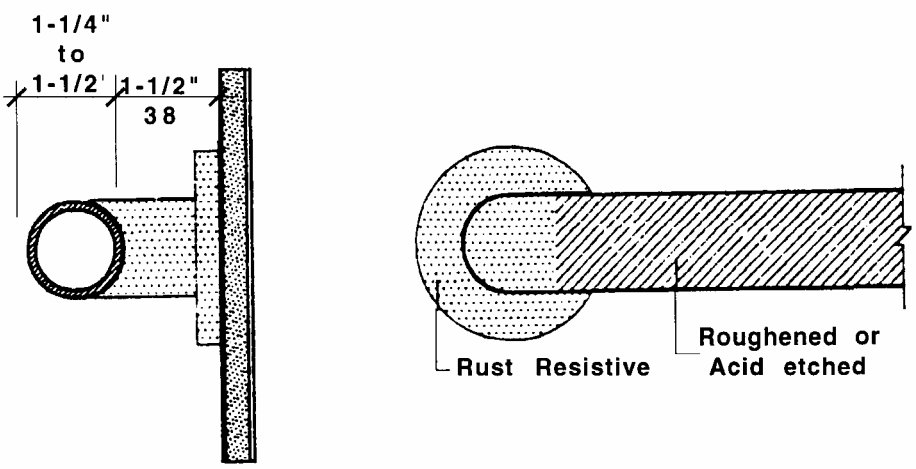

Grab Bars
Figure 30f

30.8.4 Material: Grab bars shall also be non-rusting and acid-etched or roughened. Grab bars shall comply with the *structural strength* defined in **521 CMR 5.00, DEFINITIONS**.

30.8.5 Dispensers or other devices shall not be mounted above the grab bars.

30.9 **SINK**

Sinks, including vanities, shall comply with the following:

30.00: **PUBLIC TOILET ROOMS**

30.9.1 *Clear floor space*: A *clear floor space* complying with **521 CMR 6.3, Wheelchair Turning Space** shall be provided in front of a sink to allow forward approach. The *clear floor space* shall be on an *accessible route* and shall extend no more than a maximum of 19 inches (19" = 483mm) underneath the sink. *See* **Fig. 30g**.

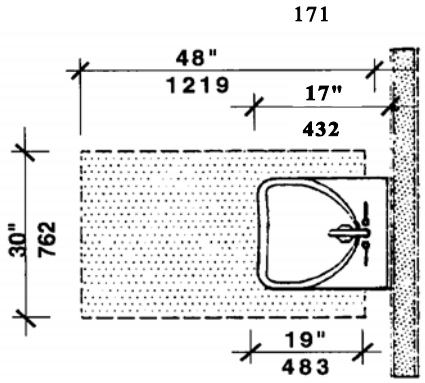

Clear Floor Space
Figure 30g

30.9.2 Height: Sinks shall be mounted with the rim no higher than 34 inches (34" = 864mm) above the finish floor. *See* **Fig. 30h**. Sinks shall also extend a minimum of 17 inches (17" = 432mm) from the wall to the front of the sink or counter.

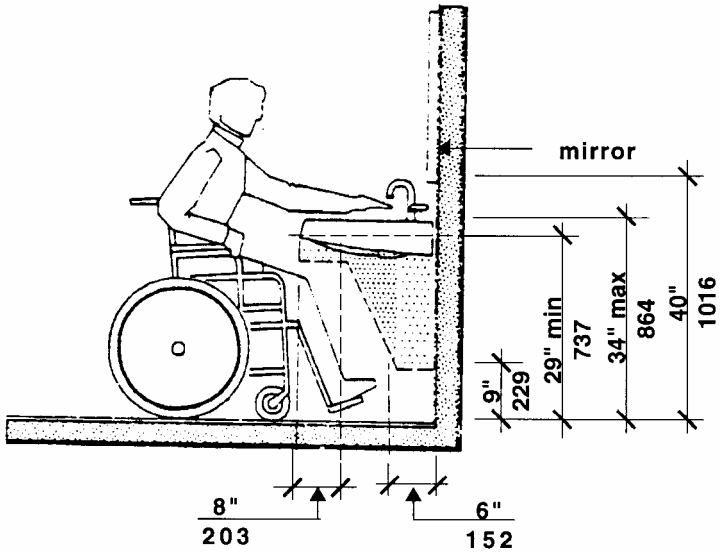

Sink Elevations
Figure 30h

30.00: **PUBLIC TOILET ROOMS**

30.9.3 Knee Clearance: Knee clearance shall be provided underneath the sink which is 27 inches (27" = 685mm) minimum from the floor to the underside of the sink and extends eight inches (8" = 205mm) minimum measured from the front edge underneath the sink back towards the wall; if a minimum of nine inches (9" = 230mm) of toe clearance is provided, a maximum of six inches (6" = 150mm) of the 48 inches (48"= 1220mm) of clear floor space required at the fixture may extend into the toe space. *See* **Fig. 30h**.

30.9.4 Depth: Sink depth shall not exceed six inches 6½ inches (6½" = 165mm).

30.9.5 Piping: Sink traps and drains shall be located as close to rear walls as possible. Hot water and drain pipes exposed under sinks shall be recessed, insulated, or guarded. There shall be no sharp or abrasive surfaces under sinks.

30.9.6 Faucets: Faucets shall be operable with one hand and shall not require tight grasping, pinching, of twisting of the wrist. Lever-operated, push-type, touch-type, or electronically controlled mechanisms are acceptable designs. If self-closing valves are used the faucet shall remain open for at least ten seconds.

30.10 **URINALS**

Where one or more urinals is provided, at least one urinal shall be *accessible*. *See* **Fig. 30i**.

30.10.1 Height: *Accessible* urinals shall be stall-type or wall-hung with an elongated rim at a maximum of 17 inches (17" = 432mm) above the finish floor.

30.10.2 *Clear floor space*: A *clear floor space* shall be provided in front of an *accessible* urinal to allow forward approach. This *clear space* shall adjoin or overlap an *accessible route* and shall comply with **521 CMR 6.3, Wheelchair Turning Space**. Urinal shields that do not extend beyond the front edge of the urinal rim may be provided with 29 inches (29" = 737mm) clearance between them.

30.10.3 Flush Controls: Flush controls shall be hand operated or automatic, and shall comply with **521 CMR 39.5, Operation** and shall be mounted no more than 44 inches (44" = 1118mm) above the finish floor. *See* **Fig. 30i**.

30.00: PUBLIC TOILET ROOMS

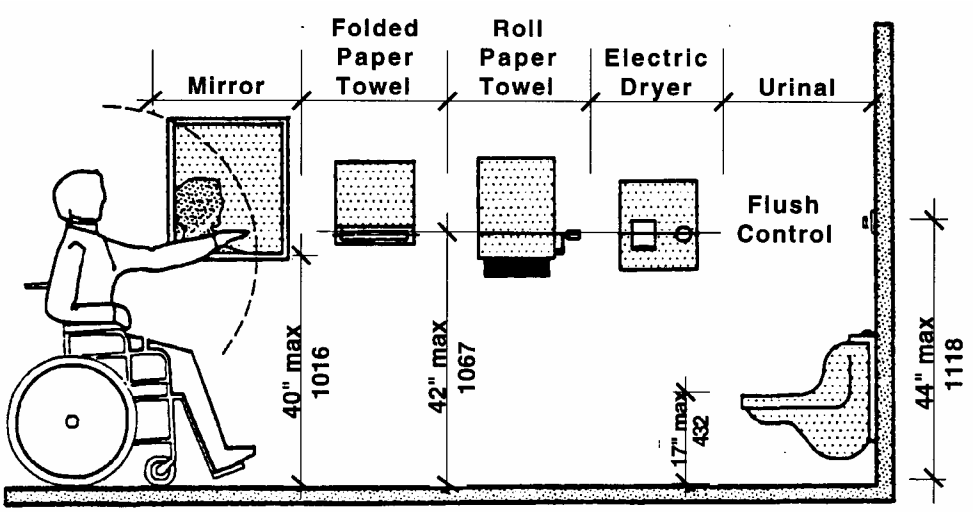

Dispenser Elevations
Figure 30i

30.11 MIRROR

The top of any shelf and or bottom of any mirror that is provided above a sink shall be set with the bottom edge of the reflecting surface no higher than 40 inches (40" = 1016mm) above the finish floor. *See* **Fig. 30i**.

30.12 DISPENSERS

Towel dispensers, drying devices, or other types of devices and dispensers shall have at least one of each device mounted within the *zone of reach*. At least one of each device shall be located within reach of a person using the *accessible* sink and shall comply with **521 CMR 39.5, Operation**. *See* **Fig. 30i**.

30.13 CONTROLS AND RECEPTACLES

If controls, receptacles, or other equipment is provided, then at least one of each shall be on an *accessible route* and shall comply with **521 CMR 39.00: CONTROLS**.

30.14 CHILDREN'S WATER CLOSETS

Where provided, shall comply with the following:

30.14.1 *Clear floor space*: *Clear floor space* for water closets shall comply with *521 CMR 30.5, Clear Floor Space*. *Clear floor space* may be arranged to allow either a left-handed or right-handed approach.

30.14.2 Location: The centerline of the water closet shall be located 11 inches (11" = 279mm) from the nearest side wall for pre-kindergarten; 11 to 15(11" to 15" = 279mm to 381mm) for kindergarten to third grade and 15 to 18 inches (15" to 18" = 381mm to 457mm) for fourth grade to sixth grade. The water closet shall also be located 42 inches (42" = 1067mm) from the centerline of the water closet to the opposite wall or closest edge of next fixture.

30.00: **PUBLIC TOILET ROOMS**

30.14.3 Height: Water closets shall be set at a height measured from the floor to the top of the seat as follows:

Pre-kindergarten:	11½" to 12½" (292mm to 318mm)
Kindergarten to third grade:	12" to 15" (305mm to 381mm)
Fourth grade to sixth grade:	15" to 17" (381mm to 432mm)

30.14.4 Flush Controls: Controls for flush valves on water closets used by children shall be mounted on the wide side of water closet within 20 to 30 inches (20" to 30" = 508mm to 762mm) above the floor.

30.14.5 Toilet paper dispensers: Toilet paper dispensers used by children shall be centered above finished floor, as follows:

Pre-kindergarten:	14" (356mm)
Kindergarten to third grade:	14" to 17" (356mm to 432mm)
Fourth grade to sixth grade:	17" to 19" (432mm to 483mm)

30.15 **CHILDREN'S GRAB BARS**

The water closet shall have two grab bars, 42 inches (42" = 1067mm) long, one mounted on the wall in back of the water closet and one on the side wall closest to the water closet and located no more than six inches (6" =152mm) from the interior corner. Where a tank prevents location of the rear grab bar, a bar may be installed three inches (3" = 76mm) above the tank. Where a flushometer prevents the location of a 42 inch (42" = 1067mm) rear grab bar, one grab bar, 36 inches (36" = 914mm) shall be installed to the side of the flushometer, located three inches (3" = 76mm) from the closest edge of the flushometer.

30.15.1 Height: Grab bars shall be mounted from the floor to the top of the grab bar as follows:

Pre-kindergarten:	18" to 20" (457mm to 508mm)
Kindergarten to third grade:	20" to 25" (508mm to 635mm)
Fourth grade to sixth grade:	25" to 27" (635mm to 686mm)

30.15.2 Thickness: The outside diameter of grab bars shall be as follows:

Pre-kindergarten:	1" (25mm)
Kindergarten to sixth grade:	1¼" to 1½" (32mm to 38mm)

30.16 **CHILDREN'S SINK**

Sinks including vanities shall comply with the following:

30.16.1 *Clear floor space*: A *clear floor space* complying with **521 CMR 30.5, Clear Floor Space** shall be provided in front of a sink to allow a forward approach. The *clear floor space* shall be on an *accessible route* and shall extend no more than a maximum of 19 inches (19" = 483mm) underneath the sink.

30.00: **PUBLIC TOILET ROOMS**

30.16.2 Height: Sinks shall be mounted with the rim no higher than 30 inches (30" = 762mm) above the finish floor. A clearance of at least 25 inches (25" = 635mm) above the finish floor to the bottom of the apron shall be provided. Knee and toe clearance shall be at least 30 inches (30"= 762mm) wide and 19 (19" = 483mm) deep.

30.16.3 Piping: Sink traps and drains shall be located as close to rear walls as possible. Hot water and drain pipes exposed under sinks shall be recessed, insulated, or guarded. There shall be no sharp or abrasive surfaces under sinks.

30.16.4 Faucets: Faucets shall be operable with one hand and shall not require tight grasping, pinching, or twisting of the wrist. Lever-operated push-type, touch-type, or electronically controlled mechanisms are acceptable designs. If self- closing valves are used, the faucet shall remain open for at least ten seconds.

30.17 **CHILDREN'S URINALS**

Where one or more urinal is provided, at least one urinal shall be *accessible*.

30.17.1 Height: The *accessible* urinal shall be stall-type or wall-hung with an elongated rim at a maximum of 15 inches (15" = 381mm) above the finish floor.

30.17.2 Flush Controls: Flush controls shall be hand operated or automatic, and shall be mounted no more than 44 inches (44" = 1120mm) above the finish floor.

30.18 **CHILDREN'S MIRROR**

The top of any shelf and or bottom of any mirror which is provided above a sink shall be set with the bottom edge of the reflecting surface no higher than 31 inches (31" = 787mm) above the finish floor.

30.19 **CHILDREN'S DISPENSERS**

Towel dispensers, drying devices, or other types of devices and dispensers shall have at least one of each device mounted within the *zone of reach*, and at least one of each device shall be located within reach of a person using the *accessible* sink.

30.20 **CHILDREN'S CONTROLS AND RECEPTACLES**

If controls, receptacles, or other equipment are provided, then at least one of each shall be mounted no higher than 36 inches (36" = 914mm) above the floor to the centerline of the operable portion of the control.

521 CMR 31.00: **BATHING ROOMS**

31.1 GENERAL

Each public bathing room provided on a *site* or in a *building* shall comply with 521 CMR. Bathing rooms in *Multiple dwellings* shall comply with **521 CMR 42.00: GROUP 1 BATHROOMS** and **521 CMR 44.00: GROUP 2 BATHROOMS** instead of 521 CMR 31.00. Showers in hotels shall also comply with the requirements of 521 CMR31. In each bathing room where a shower or bathtub is provided at least one of each shall be *accessible* to persons in wheelchairs or an accessible unisex bathing room shall be provided.

31.2 LOCATION

Accessible bathing rooms shall be on *accessible routes*.

31.3 VESTIBULES

Where vestibules are provided, they shall comply with **521 CMR 26.7, Two Doors in a Series**.

31.4 DOORS

All doors to *accessible* bathing rooms shall comply with **521 CMR 26.00: DOORS AND DOORWAYS**. Doors shall not swing into the *clear floor space* required for any fixture.

31.5 OTHER FIXTURES

If bathing rooms have water closets and/or sinks, those fixtures shall comply with the requirements of **521 CMR 30.00: PUBLIC TOILET ROOMS**.

31.6 CLEAR FLOOR SPACE

The *accessible* fixtures and controls required in 521 CMR 31 shall be on an *accessible route*. An unobstructed wheelchair turning space complying with **521 CMR 6.3, Wheelchair Turning Space** shall be provided. The *clear floor spaces* at fixtures and controls, the *accessible route*, and the wheelchair turning *space* may overlap.

31.7 SHOWER STALLS

Accessible shower stalls shall comply with the following:

31.7.1 Size: Shower stall size and *clear floor space* shall comply with **Fig. 31a** or **b**. The shower stall in **Fig. 31a** shall be 36 inches by 36 inches (36" by 36" = 914mm by 914mm). The shower stall in **Fig. 31b** will fit into the 30 by 60 inch (30" by 60" = 762mm by 1524mm) *space* required for a bathtub. There shall be no more than a ½ inch (½" = 13mm) lip, beveled at a slope no steeper than one-in-two (1:2) (50%).

31.00: **BATHING ROOMS**

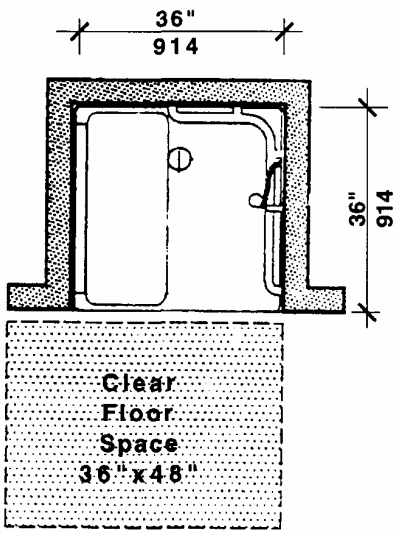

36" x 36" Shower Stall
Figure 31a

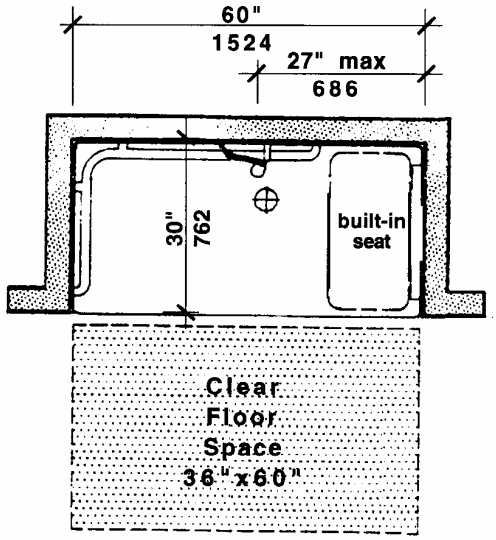

30" x 60" Shower Stall
Figure 31b

31.7.2 Floors: Floors shall be pitched to drain within the stall no steeper than one-in-50 (1:50) or (2%). Floors shall be carborundum, grit-face tile, or other slip resistant surface.

31.7.3 Controls: Showers shall operate by a single lever with a thermostatic and/or pressure balance mixing valve, and except in shower stalls 36 by 36 inches (36" by 36" = 914mm by 914mm) all controls shall be located on the center wall adjacent to the hinged seat. Faucets and other controls shall be located as shown in **Fig. 31c** and d and shall comply with **521 CMR 39.00: CONTROLS**.

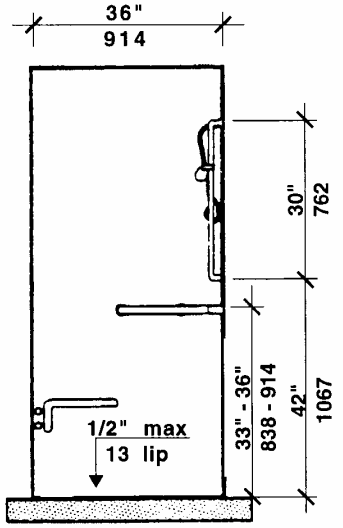

36" x 36" Shower Stall Elevation
Figure 31c

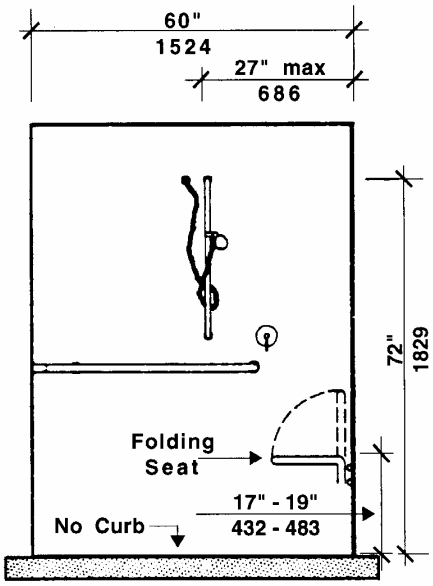

30" x 60" Shower Stall Elevation
Figure 31d

31.00: **BATHING ROOMS**

31.7.4 Seat: A folding seat shall be provided in the 36 inch by 36 inch (36" by 36" = 914mm by 914mm) shower stalls and shall be as shown in **Fig. 31c**. The seat shall be on the wall opposite the controls. In a 30 inch by 60 inch minimum (30" by 60" = 762mm by 1524mm) shower stall, a seat shall be provided. It shall be a folding type and shall be mounted on the wall adjacent to the controls as shown in **Fig. 31d**.

a. The seat shall be mounted 17 inches to 19 inches (17" to 19" = 432mm to 483mm) above the *bathroom* floor and shall extend the full depth of the stall.
b. The structural strength of seats and their attachments shall comply with the definition of structural strength in **521 CMR 5.00: DEFINITIONS**.
c. The seat shall be padded.

31.7.5 Grab bars: Two grab bars shall be provided as shown in **Fig. 31c** and **31d**.

a. They shall be placed horizontally between 33 and 36 inches (33" to 36" = 838mm to 914mm) above the floor line. In a 36 by 36 inch (36" by 36" = 914mm by 914mm) stall, two 30 inch (30" =762mm) grab bars shall be provided, one on the back wall and one on the wall opposite the seat. In a 30 inch by 60 inch (30" by 60" = 762mm by 1524mm), two grab bars, one 42 inches (42"= 1067mm) long and one 24 inches (24 " = 608mm) long shall be installed on the long wall and the short wall opposite the seat. In the alternative, a continuous L-shaped grab bar in the shower is acceptable.
b. The *structural strength* of grab bars and their attachments shall comply with the definition of structural strength in **521 CMR 5.00: DEFINITIONS**.
c. Grab bars shall be 1¼ inches to 1½ inches (1¼" to 1½" = 32mm to 38mm) in outside diameter, and have a 1½ inch (1½" = 38mm) clearance between the bar and the wall. See **Fig. 25a**.
d. Grab bars shall also be non-rusting and acid-etched or roughened.

31.7.6 Soap trays shall not incorporate hand hold features unless they can support 250 pounds for five minutes.

31.7.7 Spray Shower Unit. A shower spray unit attached to a flexible metal hose at least 60 inches (60" = 1524mm) long and adjustable from 42 inches to 72 inches (42" to 72" = 1067mm to 1829mm) that can be used both as a fixed shower head and as a hand-held shower shall be provided.

Exception: In unmonitored facilities where vandalism is a consideration, a fixed shower head mounted at 48 inches (48" = 1219mm) above the shower floor may be used in lieu of a hand-held shower head.

31.7.8 Curbs: If provided, curbs in shower stalls 36 inches by 36 inches (36" by 36" = 914mm by 914mm) shall be no higher than ½ inch (½" = 13 mm). Shower stalls that are 30 inches by 60 inches (30" by 60" = 762mm by 1524mm) minimum shall not have curbs.

31.00: **BATHING ROOMS**

31.7.9 Shower Enclosures: If provided, enclosures for shower stalls shall not obstruct controls or obstruct transfer from wheelchairs onto shower seats.

31.8 **GANG SHOWERS**
Shall also comply with 521 CMR 31 except for the provisions contained in 521 CMR 31.7.1.

31.9 **BATHTUBS**
Accessible bathtubs shall comply with the following:

31.9.1 *Clear floor space*: *Clear floor space* in front of bathtubs shall be as shown in **Fig. 31e** and **31f**.

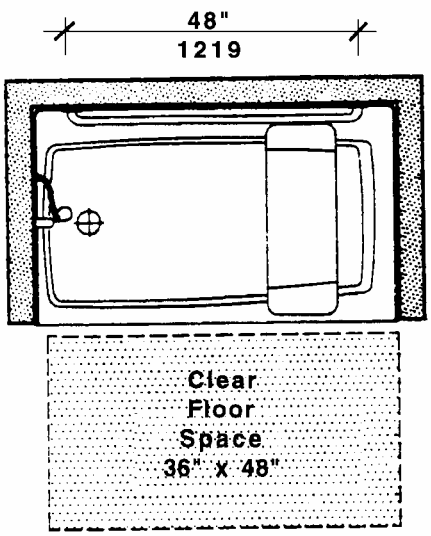

Bath Tub (Removable seat)
Figure 31e

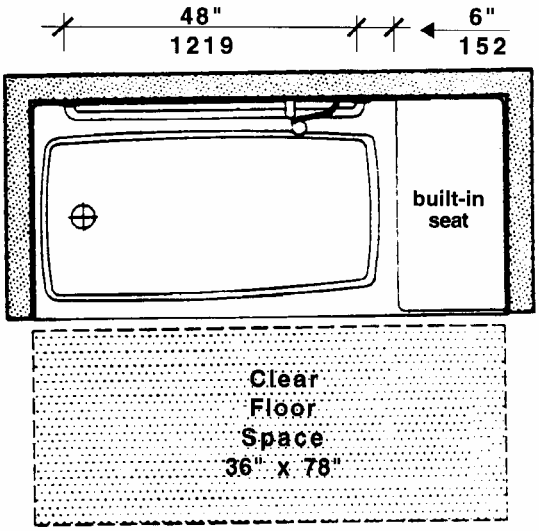

Bath Tub (Built-in seat)
Figure 31f

31.9.2 Seat: A removable in-tub seat or a built-in seat at the head end of the tub shall be provided as shown in **Fig. 31g**, and **31h**. Seats shall be mounted securely and shall not slip during use. The *structural strength* of seats and their attachments shall comply with the definition of *structural strength* in **521 CMR 5, DEFINITIONS**.

31.00: **BATHING ROOMS**

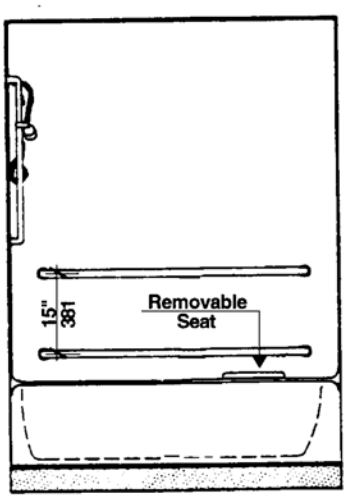

Bath Tub Elevation
(Removable seat)
Figure 31g

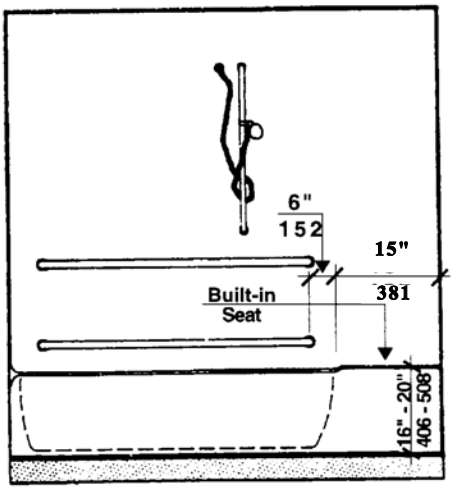

Bath Tub Elevation
(Built-in seat)
Figure 31h

31.9.3 Grab Bars: Grab bars shall be provided as shown in **Fig. 31g** and **h**.

a. The top grab bar shall be placed horizontally between 33 and 36 inches (33" = 838mm and 36" = 914mm) above the floor line and the lower grab bar shall be placed approximately 15 inches (15" = 381mm) below the top grab bar.
b. The *structural strength* of grab bars and their attachments shall comply with the definition of *structural strength* in **521 CMR 5.00: DEFINITIONS**.
c. Grab bars shall be between 1¼ inches to 1½ inches (1¼" to 1½" = 32mm to 38mm) in outside diameter, have a 1½ inch (1½" = 38mm) clearance between the bar and the wall. See **Fig. 30f**.
d. Grab bars shall also be non-rusting and acid-etched or roughened.

31.9.4 Controls: In bathtubs with built in seats, controls shall be mounted on the short wall opposite the built in seat.

31.9.5 Shower spray unit: A shower spray unit with a hose at least 60 inches (60" = 1524mm) long that can be used both as a fixed shower head and as a hand-held shower shall be provided.

31.9.6 Soap trays shall not incorporate hand hold features unless they can support 250 pounds for five minutes.

31.9.7 Bathtub Enclosures: If provided, enclosures for bathtubs shall not obstruct controls or transfer from wheelchairs onto bathtub seats or into tubs. Enclosures on bathtubs shall not have tracks mounted on the rim of the bathtub.

31.00: **BATHING ROOMS**

31.10 **MIRRORS AND SHELVES**

If mirrors and shelves are provided, then at least one of each shall be *accessible*. The top of any shelf and the bottom of any mirror which is provided above a sink shall be set with the bottom edge of the reflecting surface no higher than 40 inches (40" = 1016mm) above the floor. A full length mirror is also allowed.

31.11 **CONTROLS AND DISPENSERS**

If controls, dispensers, receptacles, or other equipment are provided, then at least one of each shall be on an *accessible route* and shall comply with **521 CMR 39.00: CONTROLS**.

521 CMR 32.00: **KITCHENS**

32.1 GENERAL

Non-commercial kitchens in public facilities such as classrooms and community rooms shall provide a *clear space* of 60 inches (60" = 1524mm) in diameter, measured 12 inches (12" = 305mm) above the floor. For requirements for kitchens in *multiple dwellings*, see **521 CMR 43.00: GROUP 1 KITCHENS** and **521 CMR 45.00: GROUP 2 KITCHENS**.

32.2 COUNTER TOPS

Counter tops that contain sinks and cooking units shall provide a minimum of 15 inches (15" = 381mm) of clear countertop on at least one side of the cooking unit and on at least one side of the sink and shall have a clear space underneath that complies with **521 CMR 32.6, Kneespace**. Countertops shall be mounted no higher than 34 inches (34" = 864mm) above the finish floor. See **Fig. 32a**.

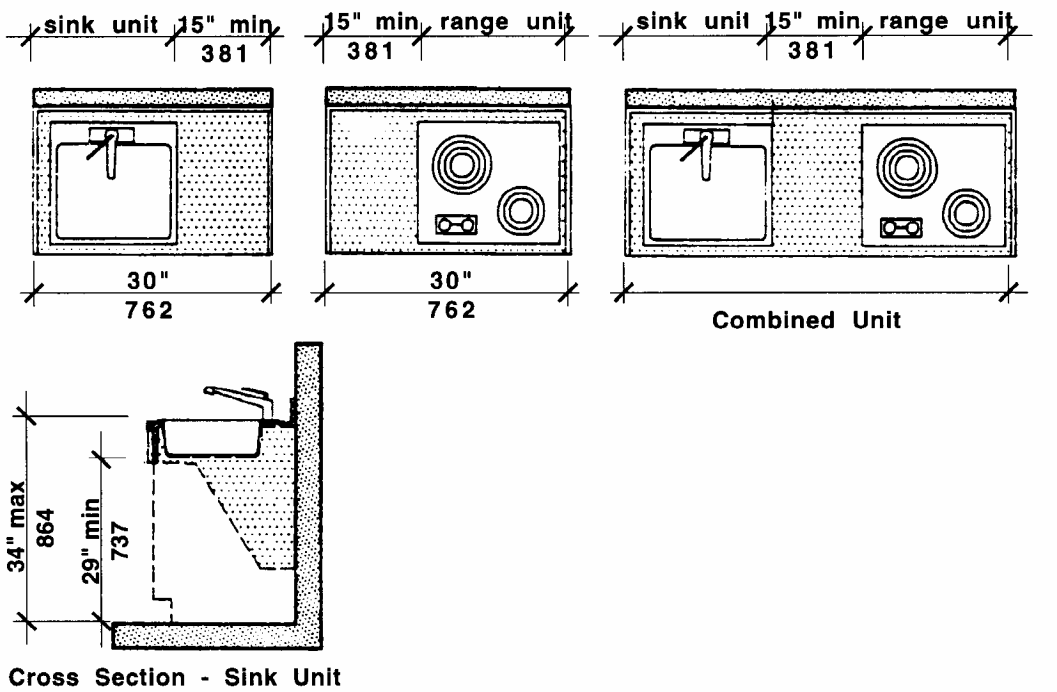

Knee Space under Counter Tops
Figure 32a

32.3 WALL CABINETS

The bottoms of the wall cabinets shall comply with **521 CMR 6.5 Forward Reach or 6.6 Side Reach**

32.4 PANTRY UNIT

A tall cabinet at least 30 inches (30" = 762mm) wide and 72 inches (72" = 1829mm) in height may be installed in lieu of making overhead cabinets *accessible*. If walk-in pantry is provided, the door to the pantry shall fully comply with **521 CMR 26.00: DOORS AND DOORWAYS**.

32.00: KITCHENS

32.5 HARDWARE

Cabinet hardware shall be operable with a closed fist. Cabinet opening devices shall be located at the top of base cabinets and at the bottom of wall cabinets.

32.6 KNEESPACE

Access *space* for the knees and feet of wheelchair users shall be provided under cooktops and sinks, and elsewhere as *space* and storage considerations permit.

32.6.1 All such spaces shall be at least 30 inches (30" = 762mm) wide, 27 inches (27" = 686mm) high, and 19 inches (19" = 483mm) deep.

32.6.2 Where sink and cooking units are within 15 inches (15" = 381mm) of each other, access space under the counter shall be continuous at a height of 27 inches (27" = 686mm) to the underside of the counter.

32.7 SINK

Sinks shall comply with the following:

32.7.1 *Clear floor space*: A *clear floor space*, complying with **521 CMR 6.3, Wheelchair Turning Space** shall be provided in front of a sink to allow forward approach. The *clear floor space* shall be on an *accessible route* and shall extend a maximum of 19 inches (19" = 483mm) underneath the sink. See **Fig. 30g**.

32.7.2 Sinks shall be mounted with the rim no higher than 34 inches (34" = 864mm) above the finish floor.

32.7.3 Sink depth shall not exceed eight inches (8" = 203mm).

32.7.4 Sink traps and drains shall be located as close to rear walls as possible. Plumbing pipes shall be recessed, insulated, or guarded. There shall be no sharp or abrasive surfaces under sinks.

32.7.5 Faucets shall be operable with one hand and shall not require tight grasping, pinching, or twisting of the wrist. Lever-operated, push-type, touch-type, or electronically controlled mechanisms are acceptable designs.

32.7.6 Garbage disposals, when provided, shall be controlled by switches under the counter at the front.

32.8 COOKING UNITS

Shall comply with the following: See **Fig. 32b**.

32.00: **KITCHENS**

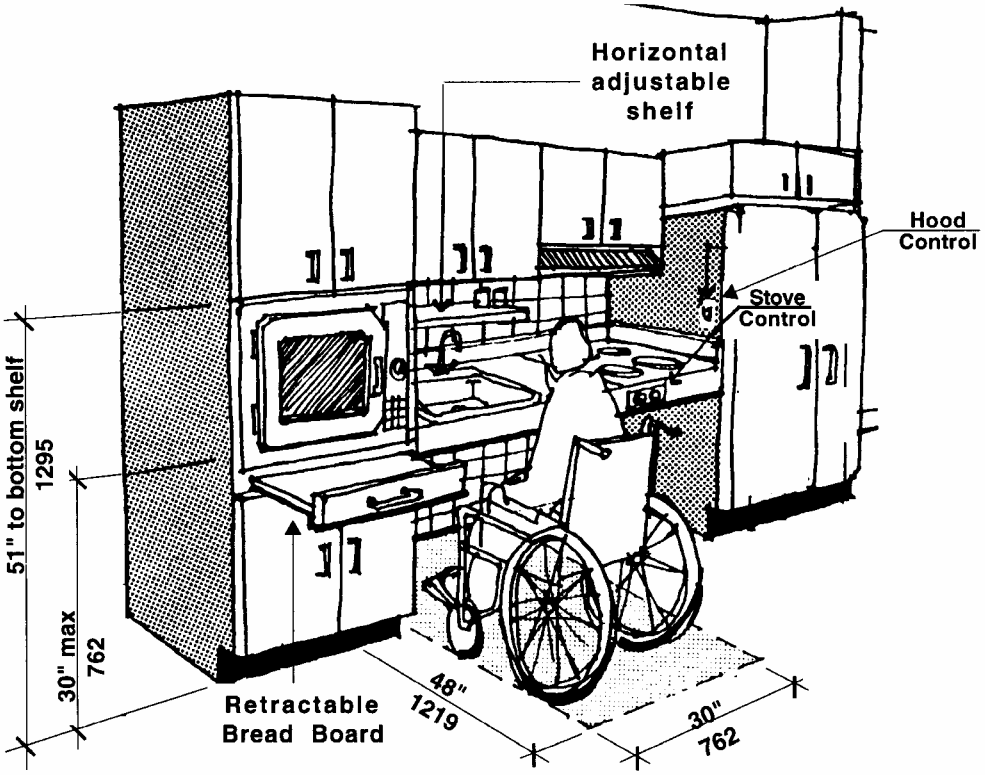

Kitchen
Figure 32b

32.8.1 Cooking units shall be the in-counter type with controls at the front of counter or counter faces, and with open access *space* under the counter.

32.8.2 Where hoods are provided above cooking units, controls shall be located no higher than 54 inches (54" = 1372mm) above the floor, but shall not be located behind cooking units.

32.8.3 Ovens shall be the wall-oven type, set at a height such that bottoms of doors are 30 inches (30" = 762mm) above the floor.

32.8.4 Bottom-hinged ovens shall provide retractable "bread board" type shelf concealed in the counter, adjacent to the oven door. If side-hinged, the "bread board" type shelf shall be located under the oven.

32.8.5 Ovens shall also be self-cleaning, or continuous cleaning.

32.9 **REFRIGERATORS**

May be combination refrigerator-freezers with two doors side by side, or may be two door freezer-above-the-refrigerator units or refrigerator-above-the-freezer units, provided the bottom of such freezer or refrigerator is no higher than 44 inches (44" = 1118mm) above the floor. See **Fig. 32c**. Refrigerators shall be self-defrosting.

32.00: **KITCHENS**

Exception: In kitchenettes an undercounter type refrigerator is acceptable.

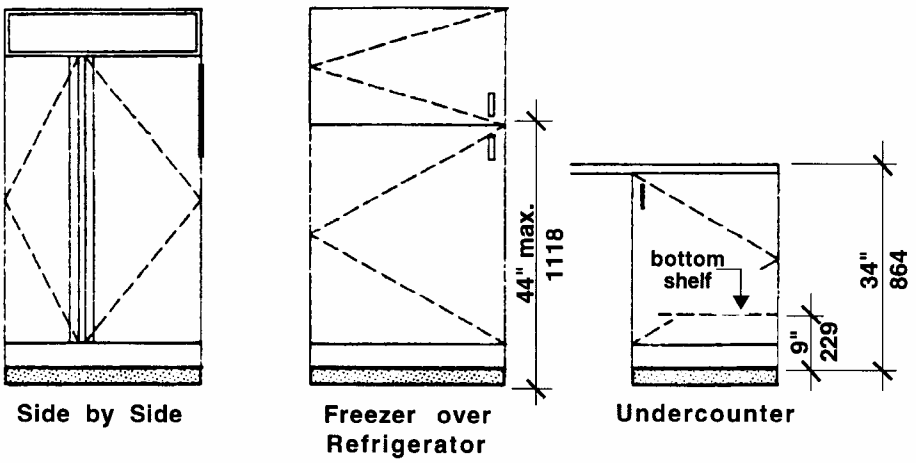

Refrigerators
Figure 32c

32.10 **CONTROLS**

All controls and switches shall comply with **521 CMR 39.00: CONTROLS**.

521 CMR 33.00: **DRESSING, FITTING AND CHANGING ROOMS**

33.1 DRESSING, FITTING AND CHANGING ROOMS

Where provided, dressing, fitting and changing rooms shall comply with the following:

33.2 DISTRIBUTION

5%, but never less than one, in each cluster of dressing, fitting and changing rooms shall be *accessible*. Where separate sex dressing, fitting or changing rooms are provided, at least one such room for each sex shall be provided.

33.3 LOCATION

Accessible dressing, fitting and changing rooms shall be on an *accessible route* complying with **521 CMR 20.00: ACCESSIBLE ROUTE**. A wheelchair turning space complying with **521 CMR 6.3, Wheelchair Turning Space** shall be provided in every *accessible* dressing, fitting and changing room entered through a swinging door, sliding door or curtain.

33.4 SIZE

The *accessible* dressing, fitting or changing room should be a minimum of five feet by six feet (5'-0" by 6'-0" = 1524mm by 1829mm). A *clear* floor area of 60 inches in diameter (60" = 1524mm), measured at 12 inches (12" = 305mm) above the floor, shall be provided in every *accessible* dressing, fitting or changing room. See **Fig. 33a**.

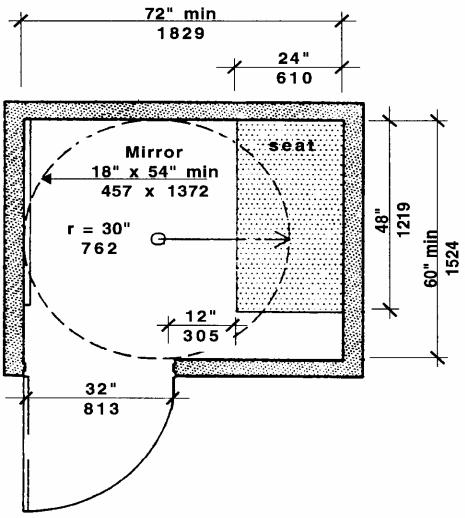

Accessible Changing Room
Figure 33a

33.4.1 No door shall swing into any part of the turning space.

33.4.2 A coat hook shall be provided within the dressing, fitting or changing room and located no higher than 54 inches (54" = 1372mm) above the floor.

33.00: DRESSING, FITTING AND CHANGING ROOMS

33.5 **DOORS**

All doors to *accessible* dressing, fitting and changing rooms shall be in compliance with **521 CMR 26.00: DOORS AND DOORWAYS**.

33.6 **SEAT**

Every *accessible* dressing, fitting and changing room shall have a seat/bench that complies with the following:

33.6.1 The seat/bench shall be 24 inches by 48 inches (24" x 48" = 610mm by 1219mm) and fixed to the wall along the shorter dimension.

33.6.2 The seat shall be mounted 17 inches to 19 inches (17" to 19" = 432mm to 483mm) above the finish floor and open below with a minimum of 12 inches (12" = 305mm) in height measured from the floor. See **Fig. 33b**.

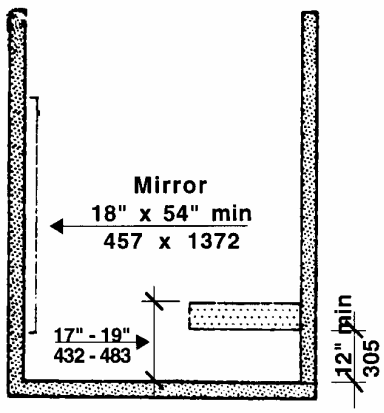

Changing Rooms
Figure 33b

33.6.3 *Clear floor space* shall be provided alongside the bench to allow a person using a wheelchair to make a parallel transfer onto the seat.

33.6.4 The seat and attachments shall comply with the requirements for *structural strength* in **521 CMR 5.00: DEFINITIONS**.

33.7 **MIRROR**

Where mirrors are provided in changing rooms a full-length mirror measuring at least 18 inches wide by 54 inches high (18" by 54" = 457mm by 1372mm), shall be mounted 18 inches (18" = 457mm) above the finish floor, in a position affording a view to a person on the bench as well as to a person in a standing position. See **Fig. 33b**.

521 CMR 34.00: **STORAGE**

34.1 GENERAL

Fixed storage *facilities* such as cabinets, shelves, closets, and drawers that are required to be *accessible* shall comply with the following requirements.

34.2 CLEAR FLOOR SPACE

A *clear floor space* that allows either a forward or parallel approach by a person using a wheelchair shall be provided at *accessible* storage *facilities*.

34.3 HEIGHT

Accessible storage *spaces* shall be within at least one of the reach ranges specified in **521 CMR 6.5, Forward Reach** and **521 CMR 6.6, Side Reach**. See **Figure 6k, 6l, 6m** and **6n**. Clothes rods or shelves shall be a maximum of 54 inches (54" = 1372mm) above the finish floor for a side approach. Where the distance from the wheelchair to the clothes rod or shelf exceeds ten inches (10" = 254mm) (as in closets without *accessible* doors), the height and depth to the rod or shelf shall comply with Fig. **34a and 34b**.

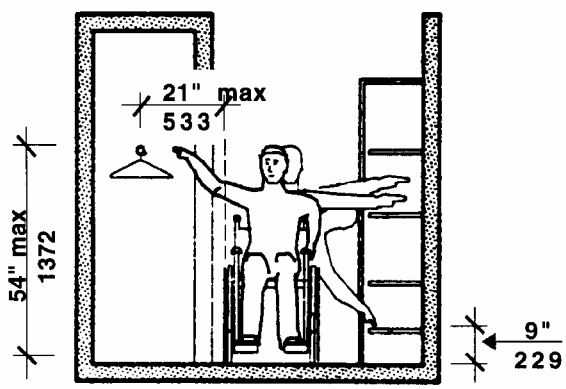

Reach Ranges
Figure 34a

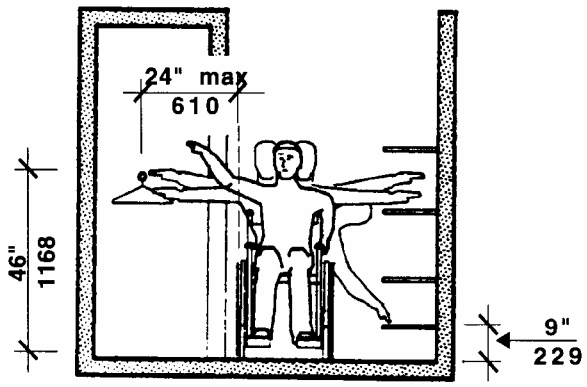

Reach Ranges
Figure 34b

34.00: **STORAGE**

34.4 **HARDWARE**

Hardware for *accessible* storage *facilities* shall comply with **521 CMR 26.11, Door Hardware**. Touch latches and U-shaped pulls are acceptable. See **Fig. 34c.**

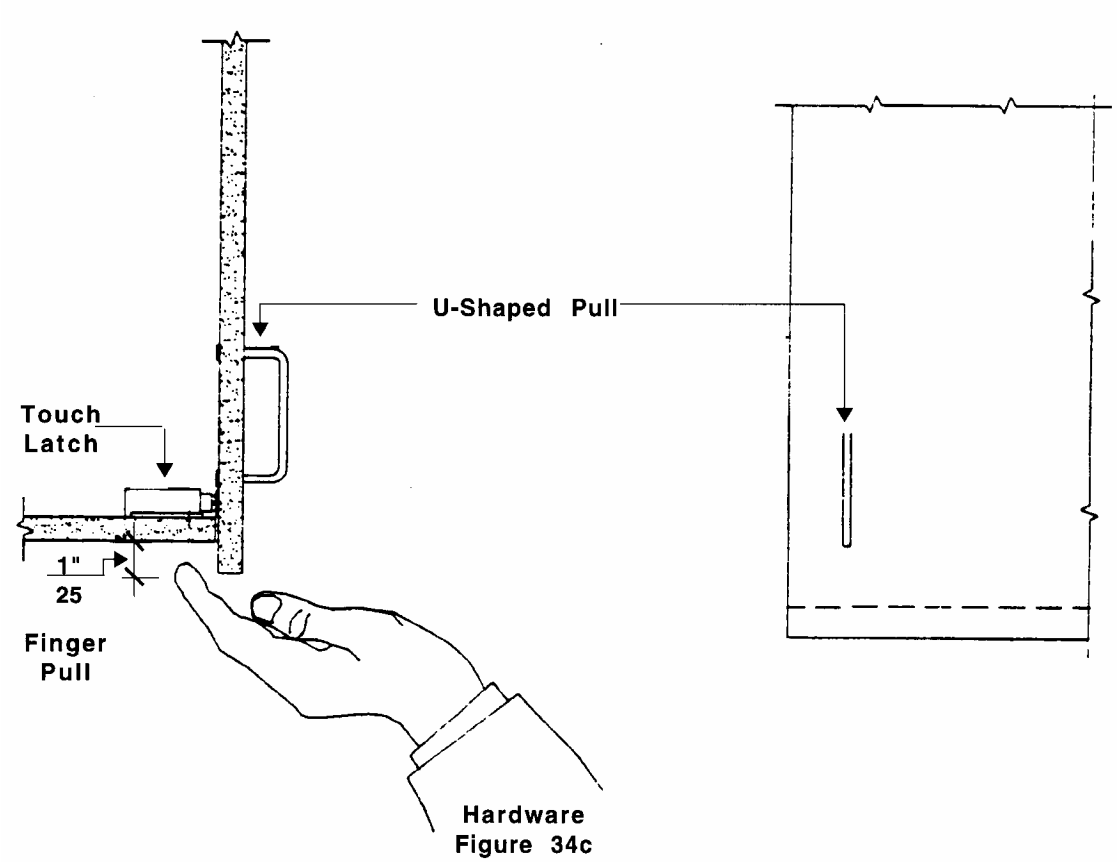

Hardware
Figure 34c

521 CMR 35.00: **TABLES AND SEATING**

35.1 FIXED TABLES AND BUILT-IN SEATING

Where fixed tables or built in seating are provided, at least 5%, but not less than one, of the fixed tables shall be *accessible*, be on an *accessible route*, and shall comply with the following. There shall be no fixed seats at *accessible* tables.

35.2 DISTRIBUTION

Accessible fixed tables shall be distributed by size and location throughout the *space* or *facility*. In establishments where separate areas are designated for smoking and non-smoking patrons, the required number of *accessible* fixed tables shall be proportionally distributed between the smoking and non-smoking areas.

35.3 CLEARANCES

Between fixed *accessible* tables there shall be at least a 36 inch (36" = 914mm) *access aisle*. No seating shall overlap the *access aisle*.

35.4 CLEAR FLOOR SPACE

Clear floor space shall be provided at each seating *space*. Such *clear floor space* shall not overlap knee *space* by more than 19 inches (19" = 483mm). See **Fig. 35a**.

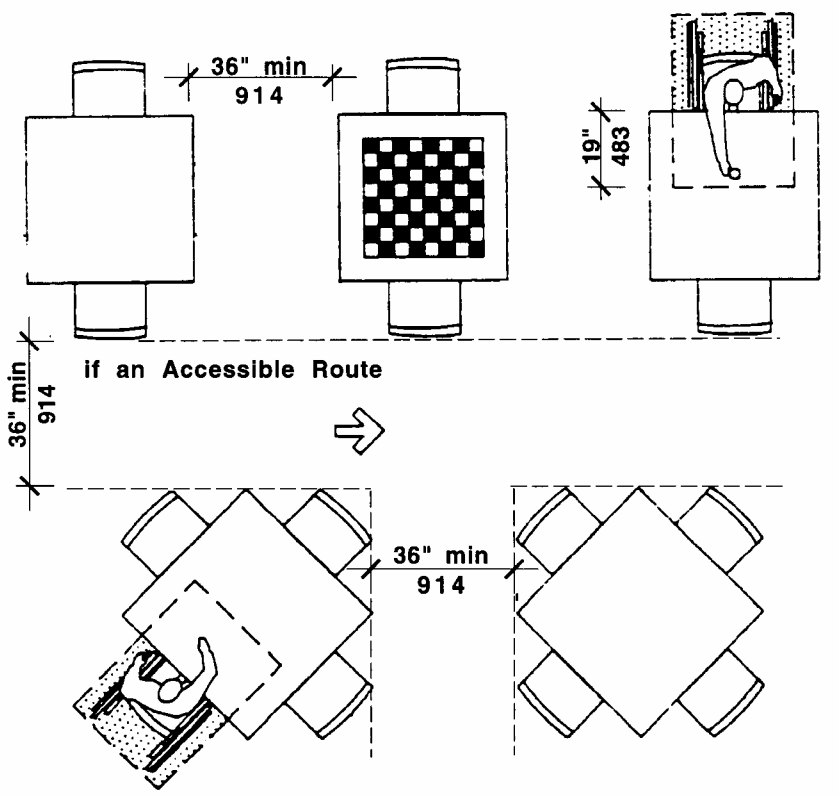

Clearances for Tables and Seating
Figure 35a

35.00: TABLES AND SEATING

35.5 KNEE CLEARANCES

If seating for people in wheelchairs is provided at tables or counters, knee *spaces* at least 27 inches (27" = 686mm) high, 30 inches (30" = 762mm) wide, and 19 inches (19" = 483mm) deep shall be provided. See **Fig. 35b**.

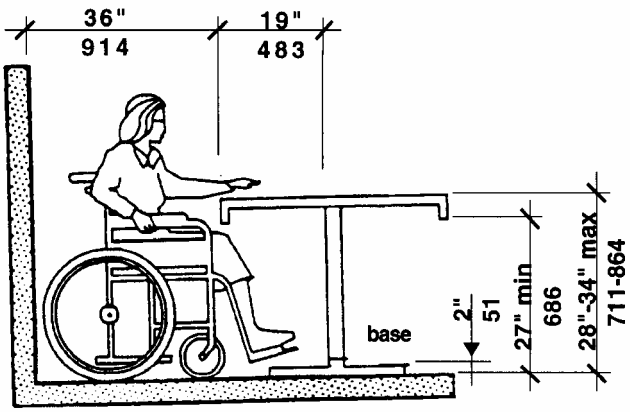

Table Heights and Clearances
Figure 35b

35.6 HEIGHT OF TABLES OR COUNTERS

The tops of *accessible* tables and counters shall be from 28 inches to 34 inches (28" to 34" = 711mm to 864mm) above the finish floor or ground.

521 CMR 36.00: **DRINKING FOUNTAINS**

36.1 **GENERAL**

Drinking fountains shall include water coolers. Drinking fountains, when provided, shall comply with the following requirements.

36.1.1 Where only one drinking fountain is provided on a floor it shall be *accessible*. A single drinking fountain can be installed by the use of a "high-low" fountain; See **Fig. 36a**.

36.1.2 Where more than one drinking fountain is provided on a floor, one in each location shall be *accessible* and shall be on an *accessible route*.

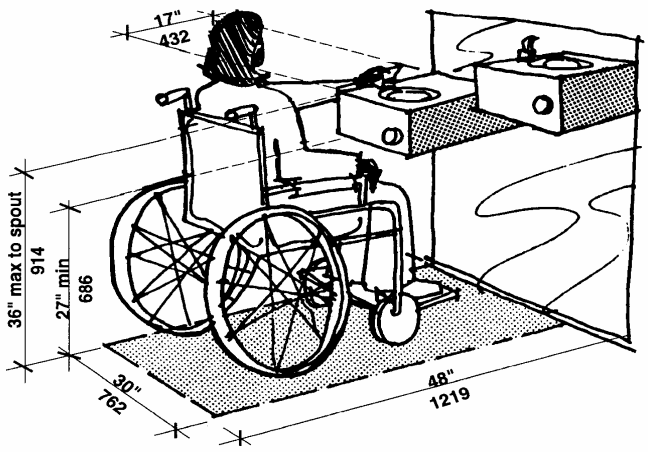

Drinking Fountains
Figure 36a

36.2 **CLEARANCES**

Shall comply with the following:

36.2.1 Wall and post-mounted cantilevered units allowing only a front approach shall have a *clear* knee *space* between the bottom of the apron and the floor or ground.

a. The knee space shall be at least 27 inches (27" = 686mm) high, 30 inches (30" = 762mm) wide, and 17 inches to 19 inches (17" to 19" = 432mm to 483mm) deep. See **Fig. 36b** and **36c**.
b. These units shall also have a minimum *clear floor space* to allow a person in a wheelchair to approach the unit facing forward. See **Fig. 36b** and **36c**.

36.00: **DRINKING FOUNTAINS**

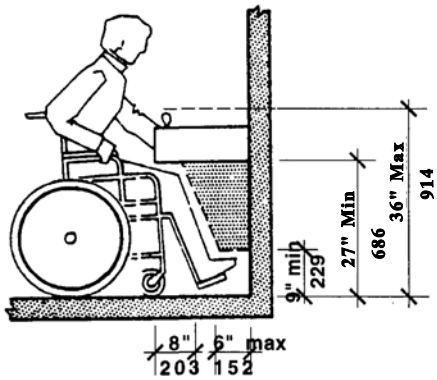

Front Approach (Elevation)
Figure 36b

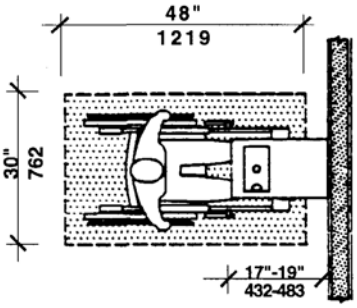

Front Approach (Plan)
Figure 36c

6.2.2 Free-standing units not having a knee *space* under them shall have a *clear floor space* that allows a person in a wheelchair to make a parallel approach to the unit. See **Fig. 36d**. This *clear floor space* shall comply with **521 CMR 6.6, Side Reach**.

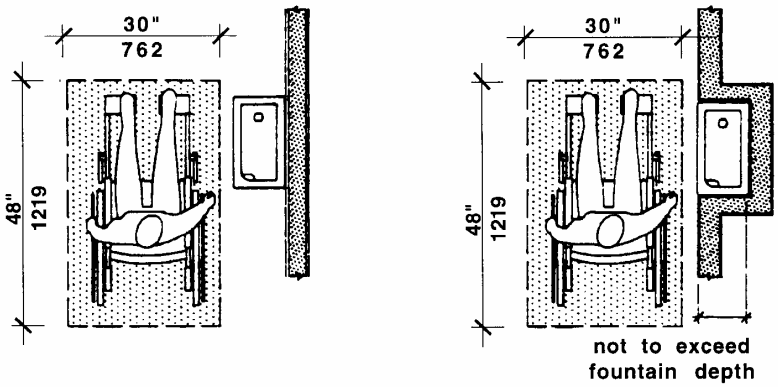

Parallel Approach
Figure 36d

36.2.3 Built-in units shall comply with the following:

a. Where a drinking fountain is cantilevered or wall mounted along an *accessible route* it shall comply with the requirements of **521 CMR 20.6, Protruding Objects**.
b. Where a drinking fountain is cantilevered in a recess, the recess shall be not less than 30 inches (30" = 762mm) wide, and the fountain shall comply with **521 CMR 36.2.1**. See **Fig. 36e**.

36.00: DRINKING FOUNTAINS

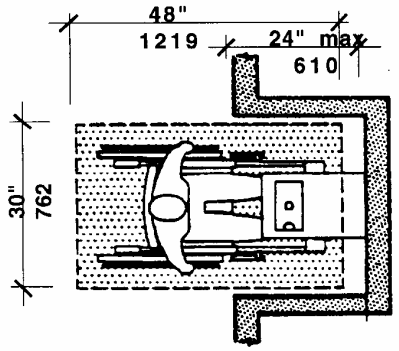

Front Approach (Cantilevered in a Recess)
Figure 36e

c. Where a drinking fountain is located in a recess and has no knee *space* below, the recess depth shall not exceed the fountain depth and the fountain shall have a *clear floor space* that allows a person in a wheelchair to make a parallel approach to the unit (See **Fig. 36d**). This *clear floor space* shall comply with **521 CMR 6.4, Clear Floor or Ground Space for Wheelchairs**.

36.3 **SPOUT LOCATION**
The spouts of drinking fountains and water coolers shall comply with the following:

36.3.1 Spouts shall be located at the front of the unit and shall direct the water flow in a trajectory that is parallel or nearly parallel to the front of the unit.

36.3.2 The spout shall provide a flow of water at least four inches (4" = 102mm) high to allow the insertion of a cup or glass under the flow of water.

36.3.3 On an *accessible* drinking fountain with a round or oval bowl, the spout must be positioned so the flow of water is within three inches (3" = 76mm) of the front edge of the fountain.

36.4 **SPOUT HEIGHT**
Spouts shall be no higher than 36 inches (36" = 914mm), measured from the floor or ground surface to the spout outlet. See **Fig. 36a**.

36.5 **CONTROLS**
Controls shall comply with the following:

36.5.1 Controls shall be front-mounted or side-mounted near the front edge of the drinking fountain.

36.5.2 Controls shall be operable with one hand and shall not require tight grasping, pinching or twisting of the wrist. Knob-type faucets are not permitted. The force required to activate the controls shall be no greater than five lbs.

36.5.3 Other types of controls may be installed in addition to, but not instead of, hand operated controls.

36.00: **DRINKING FOUNTAINS**

NON-TEXT PAGE

521 CMR 37.00: **PUBLIC TELEPHONES**

37.1 GENERAL

Wherever public pay telephones, public *closed circuit telephones*, or other public telephones are provided, at least one telephone shall be *accessible* at each location.

37.2 CLEAR FLOOR OR GROUND SPACE

Unless otherwise specified, a *clear floor space* that allows either a forward or parallel approach by a person using a wheelchair shall be provided at *accessible* telephones.

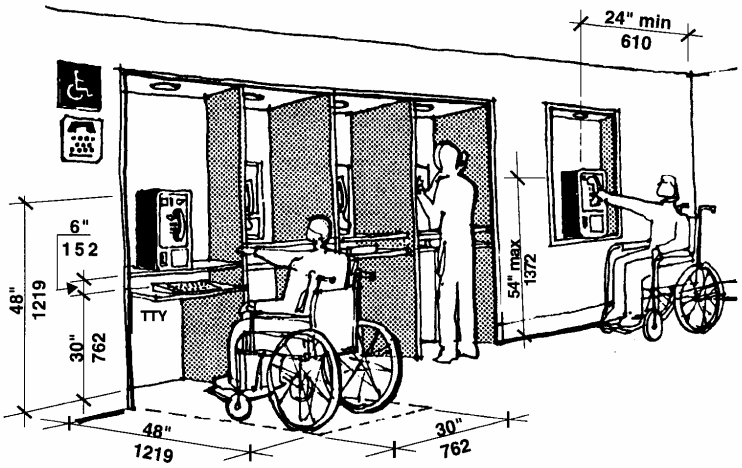

Accessible Telephones
Figure 37a

37.2.1 The *clear floor space* shall comply with **521 CMR 6.5 Forward Reach** or **521 CMR 6.6 Side Reach**. If a front approach is provided and the clear floor area includes knee *space* under the telephone, the kneespace shall be at least 30 inches (30" = 762mm) wide and 30 inches (30" = 762mm) high.

37.2.2 Bases, enclosures, and fixed seats shall not impede approaches to telephones by people who use wheelchairs.

37.3 MOUNTING HEIGHT

The highest operable part of the telephone, including dial, handset and coin deposit slots, shall be within the reach ranges specified in **521 CMR 6.5, Forward Reach** or **521 CMR 6.6, Side Reach**.

37.4 PROTRUDING OBJECTS

Accessible telephones shall be located on *accessible routes* and shall comply with **521 CMR 20.6, Protruding Objects**. See **Fig. 37b**.

37.00: PUBLIC TELEPHONES

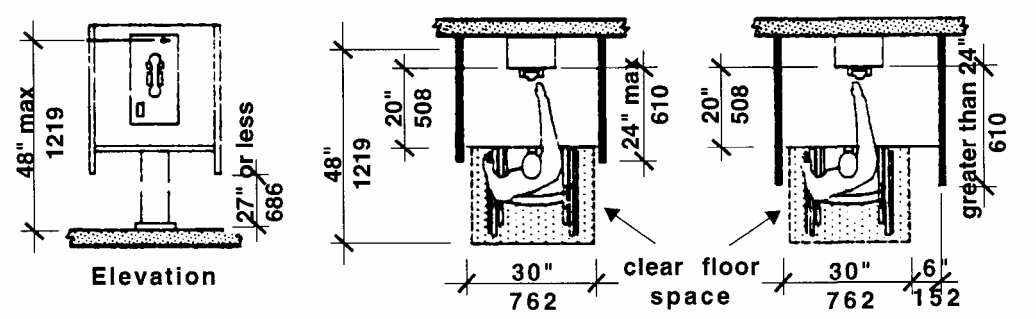

Forward Reach Requirements
Figure 37b

37.5 HEARING AID COMPATIBLE AND VOLUME CONTROL TELEPHONES

All telephones shall be hearing aid compatible and shall be equipped with a volume control.

37.5.1 Volume controls, capable of a minimum of 12 dbA and a maximum of 18 dbA above normal, shall be provided. If an automatic reset is provided then 18 dbA may be exceeded.

37.5.2 Instructions for use of the volume control shall be attached to or next to the telephone.

37.6 CONTROLS

Telephones shall have push button controls where service for such equipment is available.

37.7 TELEPHONE BOOKS

Telephone books, if provided, shall be located in a position that complies with the reach ranges specified in **521 CMR 6.5, Forward Reach** and **521 CMR 6.6, Side Reach**.

37.8 TEXT TELEPHONE (TTY)

Telephone Distribution: Where two or more telephones are provided in the same location, one shall be equipped with a *Text telephone* (*TTY*). The *text telephone* (*TTY*) shall be permanently affixed within the telephone enclosure. If an acoustic coupler is used, the telephone cord shall be at least 29 inches (29" = 737mm) long to allow connection of the *text telephone* (*TTY*) to the telephone receiver.

Exception: Where single interior public pay phones are provided in a stadium, or arena, a convention center, a hotel with a convention center, a covered mall, a public use area of a governmental *building*, in or adjacent to a hospital emergency room, recovery room or hospital waiting room, then it shall be equipped with a *text telephone* (*TTY*).

37.00: PUBLIC TELEPHONES

37.9 TELEPHONES WITH SHELF AND OUTLET

When three or more telephones are provided in a bank, one shall be designed to accommodate a portable *text telephone* (*TTY*) and shall be equipped with a shelf and an electrical outlet within or adjacent to the telephone enclosure. The telephone handset shall be capable of being placed flush on the surface of the shelf. The shelf shall be at least nine inches wide by 12 inches deep (9" x 12" = 229mm x 305mm) and shall have six inches (6" = 152mm) minimum vertical clearance.

37.10 SIGNAGE

Symbols of accessibility and directional *signage* shall be provided to comply with the following:

37.10.1 *Text telephone* (*TTY*) shall be identified by the international *TTY* symbol. See **Fig. 41c**.

37.10.2 Directional *Signage* for *text telephone* (*TTY*):

If a *facility* has a public *text telephone* (*TTY*), directional *signage* indicating the location of the nearest *text telephone* (*TTY*) shall be placed adjacent to all banks of telephones which do not contain a *text telephone* (*TTY*). Such directional signage shall include the international *TTY* symbol.

Signage for hearing amplified telephone shall be identified with signage depicting a telephone handset earpiece with radiating sound waves and shall be placed on the wall above the amplified telephone or in a location on or near the phone so that it can be easily seen and located.

521 CMR 38.00: **AUTOMATED TELLER MACHINES (ATM)**

38.1 **GENERAL**

Where only one automated teller machine (ATM) is provided, it shall comply with 521 CMR 38. Where two or more are provided at a location, then only one must comply. Each machine required to be *accessible* shall be on an *accessible* route.

Exception: Drive up teller machine.

38.2 **CONTROLS**

Controls for user activation shall comply with the requirements of **521 CMR 39.00: CONTROLS**.

38.3 **CLEARANCES AND REACH RANGE**

Free standing or built-in units not having a *clear space* under them shall provide a *clear floor space* in front that allows a forward or a parallel approach to the unit allowing a person in a wheelchair to access the controls and dispensers. The highest operable part of controls, dispensers, receptacles, and other operable equipment shall be placed within at least one of the reach ranges specified in **521 CMR 6.5, Forward Reach** and **521 CMR 6.6, Side Reach**.

38.4 **EQUIPMENT FOR PERSONS WITH VISION IMPAIRMENTS**

Instructions and all information for use on the *accessible* units shall be made *accessible* to and independently usable by persons with vision impairments.

521 CMR 39.00: **CONTROLS**

39.1 **GENERAL**

Controls and operating mechanisms in *accessible spaces*, along *accessible routes*, or as parts of *accessible elements* shall be *accessible* and shall comply with 521 CMR 39. For example: light switches and dispenser controls shall be accessible and shall comply with the requirements of 521 CMR 39.00.

39.2 **CLEAR FLOOR SPACE**

Clear floor space that allows a forward or a parallel approach by a person using a wheelchair shall be provided at controls, dispensers, receptacles, and other operable equipment.

39.3 **HEIGHT**

The highest operable part of controls, dispensers, receptacles, and other operable equipment shall be placed within at least one of the reach ranges specified in **521 CMR 6.5, Forward Reach** and **521 CMR 6.6, Side Reach**.

39.3.1 Electrical and communications system receptacles on walls shall be mounted between 15 inches (15" = 381mm) and 48 inches (48" = 1219mm) above the floor, measured at the centerline of the lowest receptacle.

Exception: These requirements do not apply where the use of special equipment dictates otherwise or where electrical and communications systems receptacles are not normally intended for use by building occupants.

39.4 **LOCATION**

All such controls shall be located at least 18 inches (18" = 457mm) from an interior corner.

39.5 **OPERATION**

Controls and operating mechanisms shall be operable with one hand and shall not require tight grasping, pinching, or twisting of the wrist. The force required to activate controls shall be no greater than five lbs.

39.6 **WINDOWS: RESERVED**

521 CMR 40.00: **ALARMS**

40.1 **GENERAL**

If emergency warning systems are provided, then they shall include both audible alarms and visual alarms.

40.1.1 *Sleeping accommodations* for persons with hearing impairments (*See* **521 CMR 8.4.5**) shall have an alarm system that complies with **521 CMR 40.4**.

40.1.2 Emergency warning systems in medical care *facilities* may be modified to suit standard health care alarm design practice.

40.2 **AUDIBLE ALARMS**

If provided, audible emergency alarms shall produce a sound that exceeds the prevailing equivalent sound level in the room or space by at least 15 dbA or exceeds any maximum sound level with a duration of 60 seconds by 5 dbA, whichever is louder. If an audible alarm in an adjacent space provides the proper decibel level within a room, then only the visual alarm is needed. Sound levels for alarm signals shall not exceed 120 dbA.

40.3 **VISUAL ALARMS**

At a minimum, visual signal appliances, if provided, shall be provided in *buildings* and *facilities* in each of the following areas: restrooms, meeting rooms, hallways, lobbies, classrooms, and any general usage areas open to the public.

40.3.1 Visual alarm signal appliances shall be integrated into the *building* or *facility* alarm system. If single station audible alarms are provided, then single station visual alarm signals shall be provided.

40.3.2 Visual alarm signals shall have photometric features in accordance with NFPA 72, Section 7.5, 2002.

40.3.3 Visual alarm signals shall be located in accordance with NFPA 72, Section 7.5, 2002.

40.4 **AUXILIARY ALARMS**

Units and *sleeping accommodations* shall have a visual alarm connected to the *building* emergency alarm system or shall have a standard 110-volt electrical receptacle into which such an alarm can be connected and a means by which a signal from the *building* emergency alarm system can trigger such an auxiliary alarm.

40.4.1 When visual alarms are in place the signal shall be visible in all areas of the unit or room.

40.4.2 Instructions for use of the auxiliary alarm or receptacle shall be provided.

521 CMR 41.00: SIGNAGE

41.1 GENERAL

The following types of *signage* shall be provided:

41.1.1 Signs that designate permanent rooms and *spaces* shall comply with **521 CMR 41.2, 41.5** and **41.6**. These include toilet room signs, room numbers, stair signs, etc.

Exception: *Building* directories, menus, and all other signs that are temporary are not required to comply.

41.1.2 Other signs that provide direction to, or information about, functional *spaces* of the *building* shall comply with **521 CMR 41.3, 41.4**, and **41.6**.

41.1.3 Elements and *spaces* of *accessible facilities* which shall be identified by the International Symbol of *Accessibility* (*See* **Fig. 41a**) and which shall comply with **521 CMR 41.7, Symbols of Accessibility** are:

a. Parking *spaces* designated as reserved for individuals with disabilities;
b. *Accessible* passenger loading zones;
c. *Accessible entrances* when not all are *accessible* (inaccessible *entrances* shall have directional *signage* to indicate the route to the nearest *accessible entrance*);
d. *Accessible* toilet and bathing facilities when not all are *accessible*.
e. *Emergency egress* signs, which are required to be illuminated.

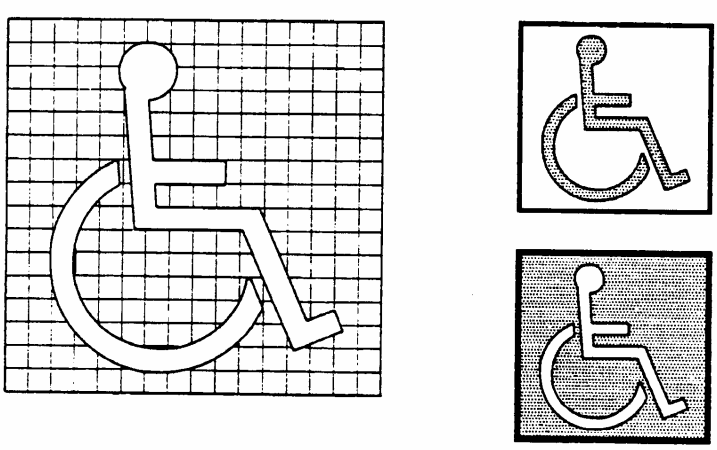

International Symbol of Accessibility
Figure 41a

41.2 MOUNTING LOCATION AND HEIGHT

Where permanent identification is provided for rooms and *spaces*, signs shall be installed on the wall adjacent to the latch side of the door. Where there is no wall *space* to the latch side of the door, including at double leaf doors, signs shall be placed on the nearest adjacent wall.

41.00: SIGNAGE

41.2.1 Mounting location shall allow a person to approach within three inches (3" = 76mm) of *signage* without encountering protruding objects or standing within the swing of a door.

41.2.2 Mounting height shall be 60 inches (60" = 1524mm) above the finish floor to the centerline of the sign.

41.3 **CHARACTER PROPORTION**
Letters and numbers on signs shall have a width-to-height ratio between 3:5 and 1:1, and a stroke-width-to-height ratio between 1:5 and 1:10.

41.4 **CHARACTER HEIGHT**
Characters and numbers on signs shall be sized according to the viewing distance from which they are to be read.

41.4.1 The minimum height of suspended or overhead characters is three inches (3" = 76mm) and is measured using an upper case X.

41.4.2 Lower case characters are permitted.

41.5 **RAISED AND BRAILLED CHARACTERS AND PICTORIAL SYMBOL SIGNS**
Shall comply with the following:

41.5.1 Letters and numerals shall be raised one thirty-second of an inch (1/32" = 0.8mm), upper case, sans serif or simple serif type.

41.5.2 Letters and/or numerals shall be accompanied with Grade 2 *Braille*.

41.5.3 Raised characters shall be at least 5/8” of an inch (5/8" = 16mm) high, but no higher than two inches (2" = 51mm).

41.5.4 Pictograms shall be accompanied by the equivalent verbal description placed directly below the pictogram. The border dimension of the pictogram shall be six inches (6" = 152mm) minimum in height.

41.6 **FINISH AND CONTRAST**
The characters and background of signs shall be eggshell, matte, or other non-glare finish. Characters and symbols shall contrast with their background: either light characters on a dark background or dark characters on a light background.

41.7 **SYMBOLS OF ACCESSIBILITY**
Facilities and elements required to be identified as *accessible* by 521 CMR 41.1.3 shall use the international symbol of *accessibility*. The symbol shall be displayed as shown in Fig. 41a.

41.00: SIGNAGE

41.8 VOLUME CONTROL TELEPHONES

Telephones required to have a volume control under **521 CMR 37.5**, shall be identified by a sign containing a depiction of a telephone handset with radiating sound waves.

41.9 TEXT TELEPHONES (TTY)

Text telephones (*TTY*) required by **521 CMR 37.8, Text Telephones** shall be identified by the international *TTY* symbol (*See* **Fig. 41c**). In addition, if a facility has a public *text telephone* (*TTY*), directional *signage* indicating the location of the nearest *text telephone* (*TTY*) shall be placed adjacent to all banks of telephones that do not contain a *text telephone* (*TTY*). Such directional *signage* shall include the international *TTY* symbol. If a *facility* has no banks of telephones but a public *text telephone* (*TTY*) is available, the directional signage shall be provided at the entrance (e.g., in a *building* directory).

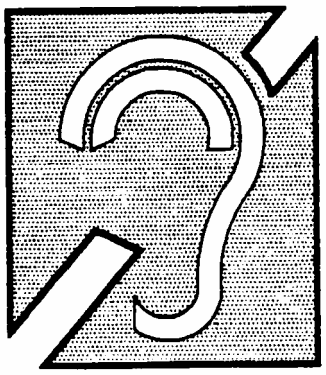

International Symbol of Access for Hearing Loss
Figure 41b

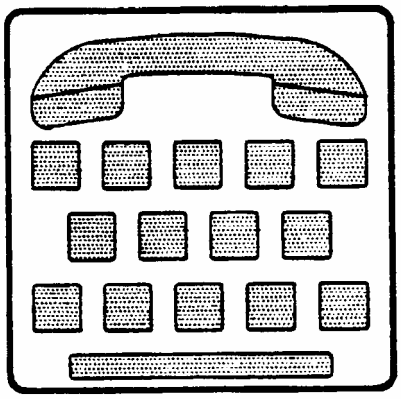

International TTY Symbol
Figure 41c

41.10 ASSISTIVE LISTENING SYSTEMS

In *assembly areas* where permanently installed *assistive listening systems* are required by **521 CMR 14.5, Assistive Listening Devices** the availability of such systems shall be identified with *signage* that includes the international symbol of access for hearing loss. *See* **Fig 41b**.

41.11 ILLUMINATION LEVELS (reserved)

521 CMR 42.00: **GROUP 1 BATHROOMS**

42.1 **GENERAL**

In *Group 1 dwelling units*, (see **521 CMR 9.2, Applicability**) *bathrooms* and *half bathrooms* shall comply with the following:

42.1.1 Number: If more than one *bathroom* is provided, whether a full bath or *half bath*, and one *bathroom* is a captive *bathroom* (a *bathroom* only entered through a bedroom) then both must comply unless the captive *bathroom* has two entries, one from the *bedroom* and one from the corridor, then only the captive *bathroom* is required to comply. If two common *bathrooms* are provided, then only one full *bathroom* must comply. If two captive *bathrooms* are provided, then both must comply.

42.2 **CLEAR FLOOR SPACE:**

Shall be as defined in **521 CMR 6.4, Clear Floor or Ground Space for Wheelchairs**. *Clear floor space* shall be available at each fixture as shown below to enable users to reach fixture controls and to transfer out of a wheelchair. When a *bathroom* is adapted, the *clear floor space* must be able to be made free of obstructions, other than those shown in the diagram. The *clear floor space* for one fixture may overlap the *clear floor space* for other fixtures. The *clear floor space* for the tub or the water closet is measured from the closest edge of that fixture. The *clear floor space* for the sink may extend a maximum of 19 inches (19" = 483mm) under the sink. Wing walls may not intrude on the minimum *clear floor space*.

42.3 MANEUVERING SPACE:

Shall be available so that, at a minimum, a person using a wheelchair can enter, close the door, use each of the fixtures, reopen the door, and exit. See **Fig. 42a** and **42b**.

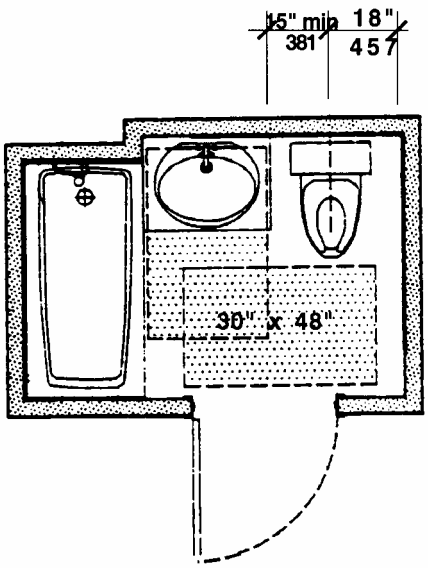

Maneuvering Space
Figure 42a

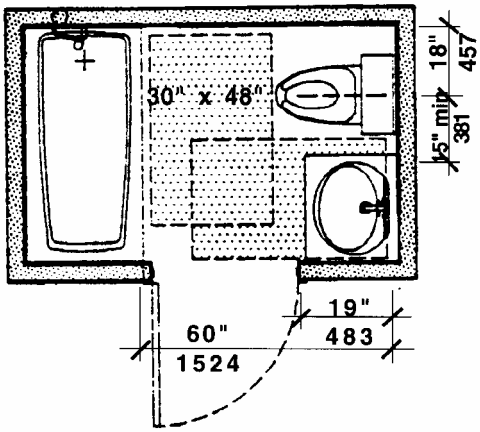

Maneuvering Space
Figure 42b

42.00: GROUP 1 BATHROOMS

42.4 **DOORS**

Shall be capable of complying with **521 CMR 26.5, Width** through **521 CMR 26.11, Door Hardware**.

42.4.1 Operation: Doors may swing into the *bathroom* if the swing of the door does not impede *clear floor space*. If the door impedes the *clear floor space*, the doors shall be capable of being adapted to swing out, fold or slide.

42.5 **WATER CLOSETS**

Shall comply with the following:

42.5.1 *Clear Floor Space*: As defined in **521 CMR 42.2, Clear Floor Space**, shall be provided or shall be capable of being provided without *structural change* in at least one of two specific locations at the water closet. One shall be beside the water closet with its short edge parallel to the wall behind the water closet. The other shall be in front of the water closet with its long edge parallel to the wall behind the water closet.

42.5.2 Location:

a. When a water closet is located between a wall and a fixture, its centerline shall be 18 inches (18" = 457mm) from the wall. If the *clear floor space* is provided in front of the water closet, the centerline of the water closet shall be a minimum of 15 inches (15" = 381mm) from the closest edge of the fixture. *See* **Fig. 42c**.

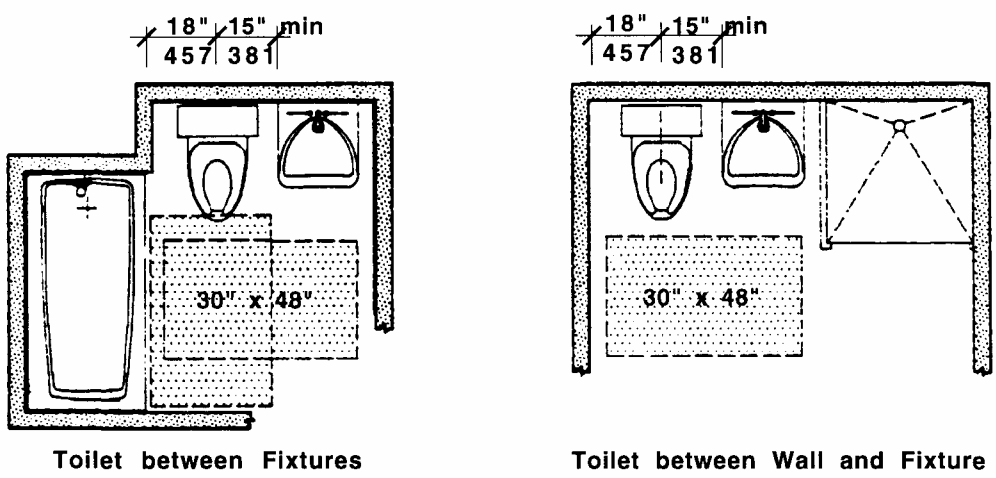

Toilet Locations
Figure 42c

b. When a water closet is located between two fixtures, its centerline shall be 18 inches (18" = 457mm) from a bathing fixture and a minimum of 15 inches (15" = 381mm) from other types of fixtures. *See* **Fig. 42c**.

42.00: **GROUP 1 BATHROOMS**

42.5.3 Wall reinforcement: Walls adjacent to and behind the water closet shall be capable of structurally supporting the future installation of grab bars from 32 to 38 inches (32" to 38" = 813mm to 965mm) above the floor. The back wall shall have reinforcement from the interior corner to a distance of six inches (6" = 152mm) beyond the widest part of the water closet. The side wall shall have reinforcement from the interior corner to a distance of six inches (6" = 152mm) beyond the front edge of the water closet, unless interrupted by a door or other fixture, then the reinforcement shall be installed as far as possible.

When the water closet is located between two fixtures, the wall reinforcement behind the water closet shall be extend at least six inches (6" = 152mm) beyond the widest part of the water closet.

42.6 **SINKS**

At least one sink in a *bathroom* must meet the following:

42.6.1 Vanity Cabinets: If a cabinet is provided under a sink, it shall be capable of being removed without structural change.

42.6.2 Knee *Space* Width: The sink shall have or be capable of having a knee *space* of 30 inches (30" = 762mm) in width.

42.6.3 Knee *Space* Depth: The front edge of the sink fixture, or the countertop in which a sink is located, shall be a minimum of 19 inches (19" = 482mm) from the back wall or shall be capable of being relocated to create a *space* of that depth under the sink.

42.6.4 Height: The sink shall be capable of being relocated without structural change.

42.6.5 *Clear Floor Space*: Shall be provided at the sink, as defined in **521 CMR 42.2, Clear Floor Space** and shall be perpendicular to the face of the sink and may extend under the sink. *See* **Fig. 42d**.

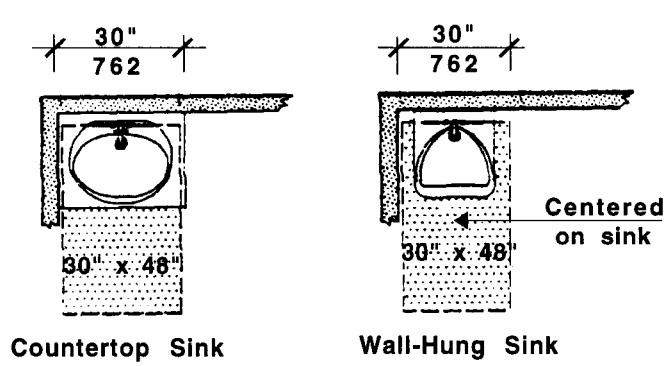

Sinks
Figure 42d

42.00: GROUP 1 BATHROOMS

42.7 BATHING FIXTURES

If more than one bathing fixture is provided in a *bathroom*, at least one must meet the requirements of 521 CMR 42.

42.7.1 Bathtubs shall comply with the following:

a. Size: Bathtubs shall be at least a nominal 60 inches (60" = 1524mm) long.
b. *Clear Floor Space*: At the bathtub, as defined in **521 CMR 42.2, Clear Floor Space** shall be parallel to the face of the tub.
c. Wall Reinforcement: All tub walls shall be capable of structurally supporting the future installation of grab bars from six inches (6" = 152mm) above the tub rim to a height of 48 inches (48" = 1219mm) above the tub bottom and shall extend the length and width of the tub.
d. Door Enclosure: Tracks for sliding doors or enclosures mounted on the rim of a bathtub must be capable of removal to provide a smooth tub rim for transfer.

42.7.2 Showers shall comply with the following:

a. Size: Shower stalls shall be a minimum, nominal dimension of 36 inches by 36 inches (36" x 36" = 914mm x 914mm).
b. Minimum *Clear Floor Space*: At the shower, as defined in **521 CMR 42.2, Clear Floor Space** shall be located parallel to and centered on the shower stall opening.
c. Wall Reinforcement: All shower walls shall be capable of structurally supporting the future installation of grab bars, seats, etc., from a height of six inches (6" = 152mm) to 48 inches (48" = 1219mm) above the floor and shall extend the full width and length of the shower stall. Grab bars shall not be located behind the seat.
d. Door: The opening of the shower stall must be 32 inches (32" = 813mm) wide. If a shower door is provided, it shall be capable of swinging open 180 degrees or capable of being removed.
e. Seat: If a wall mounted seat is provided, it shall be located on a wall adjacent to the opening. The seat shall be mounted with the edge as close as possible to the door opening to allow a safe transfer.
f. Hardware Location: Mixing valves shall be mounted on the wall opposite the seat. The centerline of the shower controls shall be located between 38 inches and 48 inches (38" to 48" = 965mm to 1219mm).
g. Where curbs are provided, they shall not exceed four inches (4" = 102mm) in height.

42.7.3 Soap Tray shall not have a hand hold feature unless it can support 250 lbs for five minutes. Soap dispensers, holders, etc., shall be located within the *zone of reach* from the seat.

42.7.4 Prefabricated Units: In prefabricated showers and tubs, structural reinforcement for grab bars must be in full contact with the surface of walls of the unit on which grab bars may be mounted as described in **521 CMR 42.7.1 (c)** and **521 CMR 42.7.2 (c)**.

42.00: **GROUP 1 BATHROOMS**

42.8 **OUTLETS AND CONTROLS**
Shall comply with **521 CMR 39.00: CONTROLS**.

42.9 **ALARMS**
Shall comply with **521 CMR 40.00: ALARMS**.

521 CMR 43.00: **GROUP 1 KITCHENS**

43.1 GENERAL

In all *Group 1* Dwelling units, kitchens shall be designed so that when a unit is adapted a person in a wheelchair has access to the sink, cooking surface, refrigerator, and a food preparation surface and can turn around without having to leave the kitchen.

43.2 CLEAR FLOOR SPACE:

Shall be measured at the face of the base cabinets or appliances, (excluding cabinet hardware and appliance hardware) and shall be provided at the time of first occupancy as follows:

43.2.1 L-shaped kitchens shall have a minimum *clear floor space* of 48 inches by 48 inches (48" x 48" = 1219mm x 1219mm). *See* **Fig. 43a**.

43.2.2 U-shaped kitchens shall provide a minimum *clear floor space* of 48 inches (48" = 1219mm) between opposing base cabinets or appliances. *See* **Fig. 43b**.

43.2.3 Galley kitchens shall provide a minimum *clear floor space* of 40 inches (40" = 1016mm) between opposing base cabinets or appliances. *See* **Fig. 43c**.

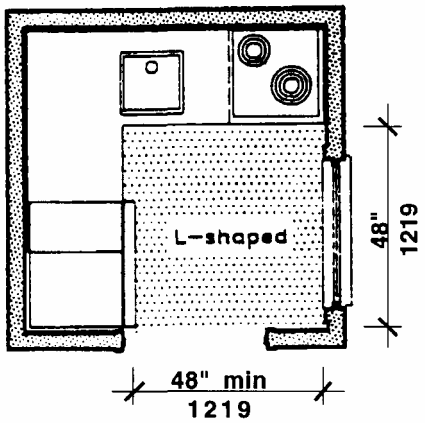

L-Shaped Kitchen
Figure 43a

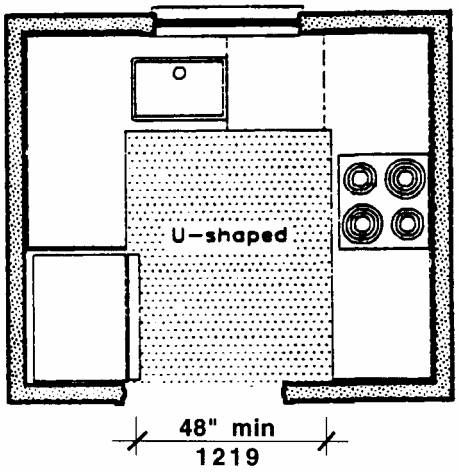

U-Shaped Kitchen
Figure 43b

43.00: GROUP 1 KITCHENS

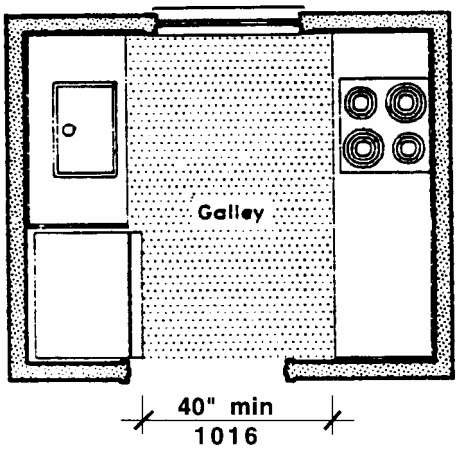

Galley Kitchen
Figure 43c

43.3 SINKS

Shall comply with the following:

43.3.1 Sink Cabinet: The base cabinet under the sink shall be capable of being removed to provide a kneespace of 30 inches (30" = 762mm) in width.

43.3.2 Sink Depth: The sink bowl shall not exceed 6½ inches (6½" = 165mm) in depth. Where more than one bowl is provided, only one bowl must meet this requirement.

43.4 COOKING UNITS

Shall comply with the following to ensure that both burners and ovens can be made functional and safe for a person in a wheelchair.

43.4.1 In-Counter cooktops: If a cooktop is provided, its base cabinet shall be capable of being removed to provide future kneespace the width of the cooktop but not less than 30 inches (30" = 762mm) wide. Cooktops shall have controls located at the front or side of the unit.

43.4.2 Wall Ovens: If a wall oven is provided, the floor of the wall oven shall be located 30 inches (30" = 762mm) above the floor.

43.5 WALL CABINETS

Walls shall be capable of structurally supporting wall cabinets at any location from 42 inches to 54 inches (42" to 54" = 1067mm to 1372mm) from the floor to the bottom of the inside of the cabinet.

43.6 BASE CABINETS

Each base cabinet shall be capable of being removed to provide kneespace for persons using wheelchairs.

43.00: **GROUP 1 KITCHENS**

43.7 REFRIGERATORS

Space shall be provided so that the refrigerator can be located so that its doors can be opened to 180 degrees. If doors cannot be opened to 180 degrees, a minimum of 30 inches (30"= 762mm) of counter *space* next to the refrigerator shall be provided.

43.7.1 Where refrigerators are provided with less than nine cubic feet of capacity, **521 CMR 43.7, Refrigerators** shall not apply.

43.8 OUTLETS AND CONTROLS

Shall comply with **521 CMR 39.00: CONTROLS**.

43.9 ALARMS

Shall comply with **521 CMR 40.00: ALARMS**.

521 CMR 44.00: **GROUP 2 BATHROOMS**

44.1 GENERAL

In all *dwelling units* required to be *Group 2A* units, (*see* **521 CMR 9.4 Group 2A Dwelling Units**) all *bathrooms* and *half bathrooms* shall comply with 521 CMR 44, exclusive of the bold and italicized text which refer to *Group 2B* units. In *facilities* required to have *Group 2B bathrooms*, such as hotels, motels, inns and health facilities, the *bathroom* shall comply with 521 CMR including the bold and italicized text which refer to *Group 2B* units.

44.2 WHEELCHAIR TURNING SPACE

Bathrooms shall have or be capable of having wheelchair turning space which complies with **521 CMR 6.3, Wheelchair Turning Space** without coming into contact with any fixtures. See **Fig. 44a**.

44.3 DOORS

Shall comply with **521 CMR 26.5, Width** through **521 CMR 26.11, Door Hardware**. Doors shall swing out, fold or slide. Doors may swing into the *bathroom* only if the door does not impede the wheelchair turning *space*.

44.4 WATER CLOSETS

Shall comply with the following:

44.4.1 Location: The centerline of the water closet shall be located 18 inches (18" = 457mm) from the nearest side wall and at least 42 inches (42" = 1067mm) from the farthest side wall or the closest edge of an adjacent fixture. There shall be 42 inches (42" = 1067mm) clear from the front edge of the water closet to the nearest wall or fixture.

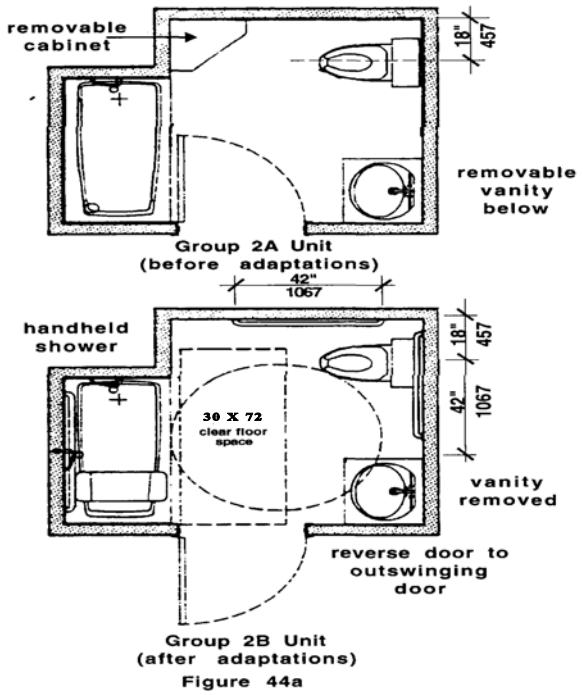

Figure 44a

44.00: GROUP 2 BATHROOMS

44.4.2 Height: The top of the water closet seat shall be 15 inches to 19 inches (15" to 19" = 381mm to 483mm) above the floor.

In Group 2B bathrooms, the water closet seat shall be 17 inches to 19 inches (17"-19" = 470mm to 483mm) above the floor.

44.4.3 Operation: The flush activator shall be operable with a closed fist and shall not require grasping, pinching, or twisting of the wrist. Water closet flush control shall be located on the *accessible* side of the water closet.

44.4.4 Wall Reinforcement: Walls adjacent to and behind the water closet shall be capable of structurally supporting the future installation of grab bars from 32 to 38 inches (32" to 38" = 813mm to 965mm) above the floor. The back wall shall have reinforcement from the interior corner to a distance of six inches (6" = 152mm) beyond the widest part of the water closet. The side wall shall have reinforcement from the interior corner to a distance of six inches (6"= 152mm) beyond the front edge of the water closet, unless interrupted by a door or other fixture, then the reinforcement shall be installed as far as possible.

In Group 2B bathrooms, two grab bars , one 42 inches (42" = 1067mm) long and one 36 inches (36" = 914mm) long shall be installed at the water closet between 33 inches (33" = 838mm) and 36 inches (36" = 914mm) above and parallel to the floor. The 42 inch (42" = 1067mm) grab bar shall be mounted on the side wall closest to the water closet, no more than 12 inches (12" = 305mm) from the back wall. The 36 inch (36" = 914mm) grab bar shall be mounted on the back wall six inches (6" = 152mm) from the interior corner and may be located up to three inches (3" = 76mm) above the top of the water closet tank.

44.4.5 Toilet Paper Dispensers: The toilet paper dispensers shall be located on the side wall closest to the water closet. The centerline of the roll shall be set at a minimum height of 19 inches (19" = 483mm) above the floor. Dispensers that control delivery or that do not permit continuous paper flow are not allowed.

44.5 SINKS

Shall comply with the following:

44.5.1 *Adaptability*: The sink, its plumbing, and the walls adjacent to the sink shall be designed so that the sink can be relocated vertically and so that the sink installation meets the definition of *structural strength*.

44.5.2 Vanity Cabinets: Where a cabinet or vanity is provided under a sink, it shall be removable or replaceable to provide a knee space that complies with **521 CMR 44.5.4** and **44.5.5**.

In Group 2B bathrooms, base cabinets can be used only if kneespace is also provided.

44.00: GROUP 2 BATHROOMS

44.5.3 Height: The sink shall be capable of being relocated vertically, in the future, without requiring *structural change* to the walls of the *bathroom*. A sink with kneespace shall be installed or be capable of being installed, with at least 27 inches (27" = 686mm) of clearance from the floor to the bottom of the sink or counter apron.

In Group 2B bathrooms, the sink rim or counter surface shall be installed at a height of 34 inches (34" = 864mm) from the floor and there shall be at least 29 inches (29" = 737mm) of clearance from the floor to the bottom of the sink or counter apron.

44.5.4 Kneespace width: The sink shall have or be capable of having, without *structural change*, a knee space of 30 inches (30" = 762mm) in width, centered on the sink.

In Group 2B bathrooms, a kneespace of 30 inches (30" = 762mm) in width must be provided.

44.5.5 Kneespace depth: The front edge of the sink or the front edge of the countertop in which a sink is located, shall be a minimum of 22 inches (22" = 559mm) from the back wall or be capable of being relocated to create a space 22 inches (22" = 559mm) deep from the back wall to the front edge of the sink.

In Group 2B bathrooms, the front edge of the sink or the front edge of the countertop in which a sink is located, shall be a minimum of 22 inches (22" = 559mm) from the back wall.

44.5.6 Piping: All piping under the sink shall be offset to the back wall so that persons in wheelchairs have maximum possible kneespace.

In Group 2B bathrooms, the hot water and waste pipes under the sink shall be offset to the back wall and insulated.

44.5.7 Hardware: Faucets shall be operable with a closed fist and shall not require grasping, pinching, or twisting of the wrist.

44.6 BATHING FIXTURES

If more than one bathing fixture is provided in a *dwelling unit*, one shall be a shower unit complying with **521 CMR 44.6.2.** If a jacuzzi or whirlpool tub is the only bathing *facility*, it must meet the requirements of **521 CMR 44.6.1**. Where one bathing fixture is provided, it may be either a shower unit or a bathtub.

44.6.1 Bathtubs shall comply with the following:

a. Fixtures: Bathtubs shall be a minimum, nominal dimension of 60 inches (60" = 1524mm) long. The rim shall be between 16 and 18 inches (16" and 18" = 406mm and 457mm) above the floor.

44.00: **GROUP 2 BATHROOMS**

b. Minimum floor area: A clear floor area 30 inches (30" = 762mm) wide and at least 72 inches (72" = 1829mm) long shall be provided adjacent to the tub. At least 12 inches (12" = 305mm) of the *clear floor* area length shall extend beyond the drain end of the tub if the tub is 60 inches (60" = 1524mm) long.

c. Wall reinforcement: All walls of the tub shall have structural reinforcement to allow the future installation of grab bars at any location from the rim of the tub to a height of 60 inches (60" = 1524m) above the tub bottom.

In Group 2B bathrooms, two grab bars, 48 inches (48" = 1219mm) long, shall be installed centered on the long wall and parallel to the floor. One shall be mounted at a height of 21 inches (21" = 533mm) and one at a height of 36 inches (36" = 914mm) above the floor.

d. Tub material: Plastic or fiberglass tubs shall be structurally capable of accepting the installation of a lift that clamps onto the rim.

e. Hardware: Faucets shall be operable with a closed fist and shall not require grasping, pinching, or twisting of the wrist.

f. Hardware location: Faucets and mixing valves shall be centered horizontally on the long wall of the tub, 28 inches (28" = 711mm) above the floor. The tub spout shall be located on the end wall above the drain and a shower head may be located on either the end wall or long wall. If hardware is installed in locations other than those specified, piping shall also be provided and capped in the wall.

g. Hand-held showers: A hand-held shower head with a flow regulator, attached to a 60 inch (60" = 1524mm) long flexible hose and an adjustable mounting bar, shall be provided or be capable of being installed on the long wall of the tub.

In Group 2B bathrooms, a tub seat which is portable or permanent shall be provided.

In Group 2B bathrooms, a hand held shower head attached to a 60 inch (60" = 1524mm) long flexible hose and an adjustable mounting bar , 36 inches (36" = 914mm) long, shall be installed on the long wall of the tub. The bottom of the mounting bar shall be located at 40 inches (40" = 1016mm) above the tub bottom.

h. Door enclosures: Tracks for sliding doors or enclosures shall not be mounted on the rim of the bathtub unless they can be removed.

In Group 2B bathrooms, sliding doors shall not be used.

i. Soap Trays: Soap trays shall not have a hand-hold feature and shall be installed or be capable of being relocated with a centerline no higher than 48 inches (48" = 1219mm) above the floor.

In Group 2B bathrooms, soap trays shall be installed no higher than 48 inches (48" = 1219mm) above the floor to the centerline of the soap tray.

44.00: **GROUP 2 BATHROOMS**

44.6.2 Showers shall comply with the following:

a. Fixture size: The shower shall be the wheel-in type with a minimum, nominal size of 30 inches by 60 inches (30" x 60" = 762mm x 1524mm). The long side shall be fully open. In the alternative, the stall may be 36 by 60 inches (36" x 60" = 914mm x 1524mm) with a 24 inch (24" = 610mm) wing wall on the 60 inch (60" = 1524mm) side. The slope of the shower floor shall not exceed 2%. The curb shall have no more than a ½ inch (½" = 13mm) maximum lip, beveled at a slope no steeper than 1:2. *See* **Fig. 44b and 44c**.

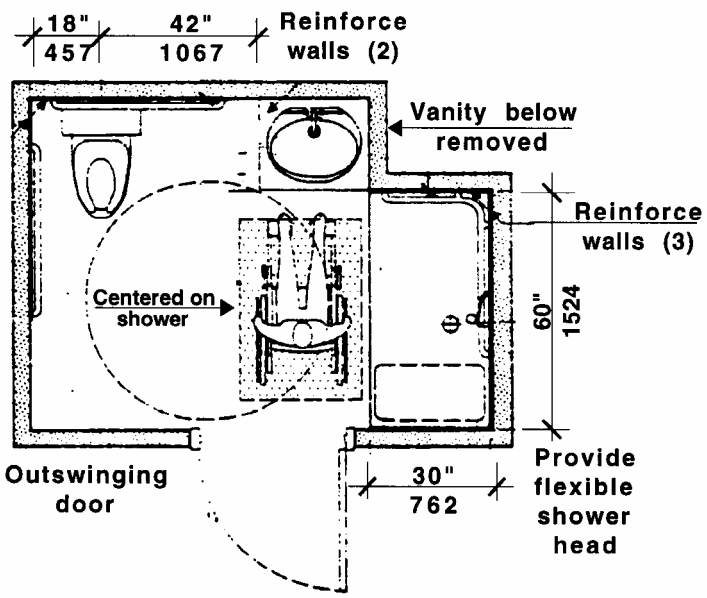

Group 2B Bathroom w/shower
Figure 44b

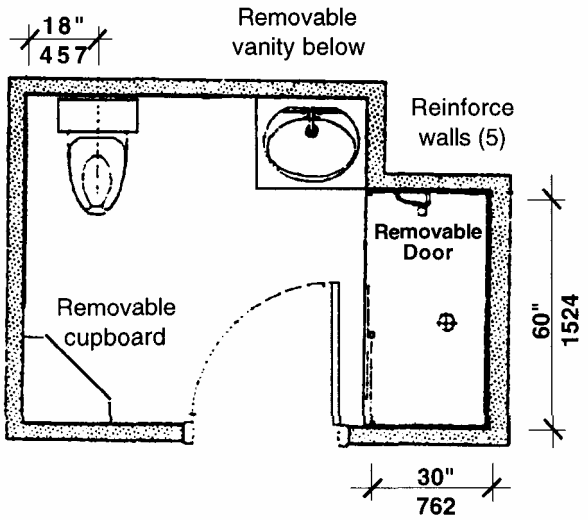

Group 2A Bathroom w/shower
Figure 44c

44.00: GROUP 2 BATHROOMS

b. Wall reinforcement: All walls of the shower shall have structural reinforcement to allow the future installation of a seat and grab bars, at any location from the floor to a height of 60 inches (60" = 1524mm) above the floor.

In Group 2B bathrooms, one grab bar 48 inches (48" = 1219mm) long shall be installed on the long wall, at a height of 36 inches (36" = 914mm) above the floor.

c. Seat: A hinged, padded shower seat shall be installed or be capable of being installed on a wall adjacent to the opening. The seat shall be mounted with the edge as close as possible to the opening to provide a safe transfer. The top of the seat shall be 17 to 19 inches (17" to 19" = 432mm to 483mm) above the shower floor.

In Group 2B bathrooms, a hinged, padded shower seat shall be installed and mounted as specified above. The seat shall be a minimum of 16 inches (16" = 406mm) deep by 24 inches (24" = 610mm) long. Grab bars shall not be located behind the seat.

d. Hardware: Faucets shall be operable with a closed fist and shall not require grasping, pinching, or twisting of the wrist.
e. Hardware location: Mixing valves shall be centered horizontally on the long wall. The centerline of the control shall be mounted 38 inches to 48 inches (38" to 48" = 965mm to 1219mm) above the shower floor.
f. Hand held shower: A hand held shower head attached to a 60 inch (60" = 1524mm) long flexible hose and an adjustable mounting bar shall be provided or be capable of being installed in the shower.

In Group 2B bathrooms, a hand held shower head attached to a 60 inch (60" = 1524mm) long flexible hose and an adjustable mounting bar , 36 inches (36" = 914mm) long shall be installed in the shower on the long wall adjacent to the seat. The bottom of the mounting bar shall be located at 40 inches (40" = 1016mm) above the shower floor.

g. Soap tray: Shall not have a hand-hold feature unless it can support 250 lbs for five minutes. If provided, it shall be installed or be capable of being relocated with a centerline no higher than 48 inches (48" = 1219mm) above the shower floor.

In Group 2B bathrooms, soap trays shall be installed no higher than 48 inches (48" = 1219mm) above the floor to the centerline of the soap tray.

44.7 GRAB BARS

Grab bars shall be non-rusting and slip resistant, shall be between 1¼ inches and 1½ inches (1¼" to 1½" = 32mm to 38mm) in outside diameter, and shall be located 1½ inches (1½" = 38mm) clear from the wall. Grab bars shall also meet the definition of *structural strength*.

44.00: GROUP 2 BATHROOMS

44.8 MIRRORS

Shall comply with the following:

44.8.1 A mirror over a sink shall be installed at or be capable of being relocated to a height of 40 inches (40" = 1016mm) from the floor to the bottom edge of the mirror's reflecting surface.

44.8.2 The top of the mirror shall be at least 72 inches (72" = 1829mm) above the floor.

In Group 2B bathrooms, a mirror shall be installed with the bottom no more than 40 inches (40" = 1016mm) above the floor and the top no less than 72 inches (72" = 1829mm) above the floor.

44.9 MEDICINE CABINETS

If medicine cabinets are provided, one medicine cabinet shall be installed or be capable of being relocated so that the inside bottom surface is at a height of 40 inches (40" = 1016mm) above the floor. If the medicine cabinet is also the only mirror, the bottom of the mirror shall be no higher than 40 inches (40" = 1016mm) above the floor.

In Group 2B bathrooms, the medicine cabinet shall be installed with its inside bottom surface at a height of 40 inches (40" = 1016mm) above the floor.

44.10 OUTLETS AND CONTROLS

Shall comply with **521 CMR 39.00: CONTROLS**.

44.11 ALARMS

Shall comply with **521 CMR 41.00: ALARMS**.

521 CMR 45.00: **GROUP 2 KITCHENS**

45.1 GENERAL

In all dwellings required to be *Group 2A* units (see **521 CMR 9.4 Group 2 Dwelling Units**) all kitchens shall comply with 521 CMR 45, exclusive of the bold and italicized text which refers to *Group 2B* units. In *facilities* required to provide *Group 2B* units, such as hotels, motels, and inns, the kitchen shall comply with 521 CMR 45 plus the bold and italicized text that refers to *Group 2B* units.

45.2 CLEAR FLOOR SPACE:

A *clear floor space* complying with **521 CMR 6.4, Clear Floor or Ground Space for Wheelchairs** shall be provided in front of those appliances which have no kneespace including but not limited to: refrigerators and wall ovens.

45.3 WHEELCHAIR TURNING SPACE

Shall comply with **521 CMR 6.3, Wheelchair Turning Space**, to permit a person using a wheelchair to turn around without coming into contact with any fixtures. In addition, when a sink and a cooktop are located 15 inches (or less) (15" = 381mm) apart, the counter shall provide or shall be capable of providing continuous *clear* kneespace at least 29 inches (29" = 737mm) in height. *See* **Fig. 45a**.

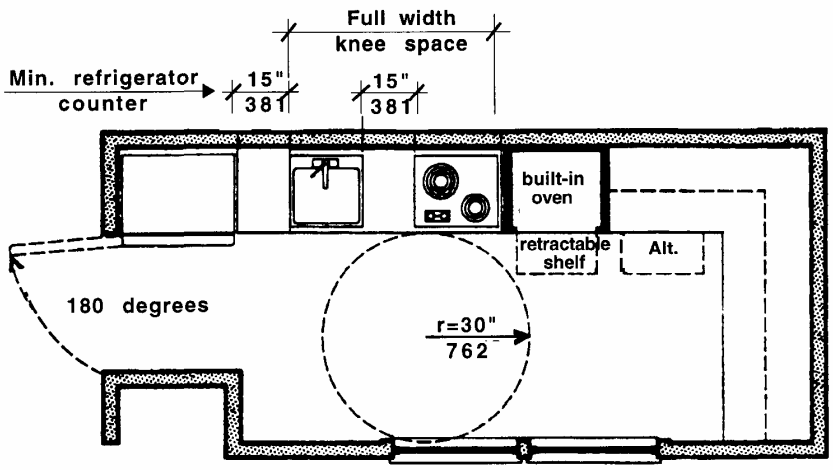

Group 2 Kitchen
Figure 45a

45.4 SINKS

Shall comply with the following:

45.4.1 Sink cabinet: If a base cabinet is provided under the sink, it shall be removable to provide a kneespace that complies with **521 CMR 45.4.2** and **45.4.3**.

In Group 2B units, base cabinets shall not be installed unless kneespace is provided.

45.00: **GROUP 2 KITCHENS**

45.4.2 Kneespace: A *clear* kneespace shall be provided or be capable of being provided under the sink, 19 inches (19" = 482mm) deep and at least 30 inches (30" = 762mm) wide.

In Group 2B units, kneespace shall be provided.

45.4.3 Height: The sink shall be capable of being relocated vertically in the future, without structural change to the walls of the kitchen.

In Group 2B units, the kitchen sink shall be located so that there is 27 inches (27" = 685mm) from the floor to the underside of the sink.

45.4.4 Countertop: A counter space at least 15 inches (15" = 381mm) wide shall be provided on one side of the sink, at the same height as the sink. This may overlap with one of the 15 inch (15" = 381mm) spaces required in **521 CMR 45.5.4.**

In Group 2B units, the countertop shall be set at 34 inches (34" = 863mm) above the floor to the top of the counter.

45.4.5 Sink depth: Sink bowls shall not exceed 6½ inches (6½ = 165mm) in depth and shall have drains offset to the rear.

45.4.6 Piping: Water pipes and drain traps shall be located as close to the rear wall of the kneespace and as high off the floor as possible to provide maximum kneespace. If there is no base cabinet under the sink, pipes and traps shall be insulated or covered.

45.4.7 Disposals: If a garbage disposal has a remote switch, it shall be located on the front face (apron) of the counter located to the left or right of the sink but not in front of the sink.

45.4.8 Sink Hardware: Faucets shall be operated by a single lever. A spray hose shall be provided or a knockout provided on the sink for the future installation of a spray hose.

45.5 COOKTOPS

Standard ranges shall not be the only cooking surface. Cooktops shall be provided and shall comply with the following:

45.5.1 Base cabinets: If a base cabinet is provided under the cooktop, it shall be removable to provide kneespace that complies with **521 CMR 45.5.2** and **45.5.3**.

In Group 2B units, base cabinets shall not be installed unless kneespace can be provided.

45.5.2 Kneespace: A *clear* kneespace shall be provided or be capable of being provided under the cooktop, 19 inches (19" = 482mm) deep and at least 30 inches (30" = 762mm) wide.

In Group 2B units, kneespace shall be provided.

45.00: **GROUP 2 KITCHENS**

45.5.3 Height: The cooktop shall be capable of being relocated vertically in the future, without *structural change* to the walls of the kitchen.

In Group 2B units, the kitchen cooktop shall be located so that there is 29 inches (29" = 737mm) from the floor to the underside of the cooktop.

45.5.4 Countertop: A counter space at least 15 inches (15" = 381mm) wide shall be provided on one side of the cooktop, at the same height as the cooktop. This may overlap with one of the 15 inch (15" = 381mm) *spaces* required in **521 CMR 45.4.4.**

45.5.5 Controls: Cooktop controls shall be located at the front or side of the appliance. Exhaust hood: if the controls for a hood are located higher than 54 inches (54" = 1372mm) above the floor, a switch shall be provided at the front face (apron) of counter.

45.6 **OVENS**

All microwave ovens, if built-in, and at least one conventional oven shall comply with the following:

45.6.1 Height: The floor of the oven shall be 30 inches (30" = 762mm) above the floor.

45.6.2 Oven type: The oven shall be self-cleaning or continuous cleaning.

45.6.3 Control location: Oven controls shall be located within the *zone of reach* as defined by 521 CMR.

45.6.4 Where a bottom-hinged oven door is provided, a retractable "bread board" type shelf shall be provided in the counter immediately adjacent to the oven door. Where a side-hinged oven is provided, the retractable "bread board" type shelf shall be provided directly under the oven.

45.7 WALL CABINETS

Walls shall be capable of structurally supporting wall cabinets so that the inside bottom surface of the cabinet is capable of being located between 42 inches (42" = 1067mm) and 54 inches (54" = 1372mm) above the floor.

In Group 2B units, the wall cabinets shall be mounted so that the inside bottom surface of the cabinet is no higher than 48 inches (48" = 1219mm) from the floor.

45.8 BASE CABINETS

Shall comply with the following:

45.8.1 Each cabinet shall be capable of being removed to provide *clear* kneespace for persons using wheelchairs.

45.00: **GROUP 2 KITCHENS**

45.8.2 Corners: Cabinets located at the inside corner of an L-shaped counter shall have or be capable of providing a built-in lazy susan.

45.8.3 Drawers: At least one base cabinet shall provide a drawer or drawers.

45.9 CABINET HARDWARE

Shall comply with the following:

45.9.1 Type: Opening devices shall not require twisting, pinching or grasping to operate.

45.9.2 Location: Cabinet opening devices shall be located at the tops of base cabinet doors and at the bottom of wall cabinet doors.

45.10 REFRIGERATORS

When the refrigerator is provided with the unit, it may be combination refrigerator-freezers with two doors side by side, or may be two door freezer-above-the-refrigerator units, provided the floor of such freezer is no higher than 44 inches (44" = 1118mm) above the floor, and shall be self-defrosting.

45.10.1 Location: The refrigerator shall be located so that its doors are capable of being opened 180 degrees and so that it meets minimum *clear floor space* and *zone of reach* requirements in **521 CMR 6.3, Wheelchair Turning Space**, **521 CMR6.5, Forward Reach** and **521 CMR 6.6, Side Reach**.

45.10.2 Counterspace: A counter *space* at least 15 inches (15" = 381mm) wide shall be provided on one side of the refrigerator. This may overlap with one of the 15 inch spaces (15" = 381mm) required in **521 CMR 45.4.4** or **45.5.4**.

45.11 OUTLETS AND CONTROLS

Shall comply with the applicable parts of **521 CMR 39.00: CONTROLS**.

45.12 ALARMS

Shall comply with the applicable parts of **521 CMR 40.00: ALARMS**.

521 CMR 46.00: **GROUP 1 BEDROOMS**

46.1 BEDROOMS IN GROUP 1 UNITS

Group 1 units shall provide or be capable of providing, wheelchair turning *space* as defined in **521 CMR 6.3, Wheelchair Turning Space**, *clear* of the door swing, at one side of the bed in the primary bedroom (based on a full size bed). Where more than one bedroom is provided, an additional bedroom shall also provide or be capable or providing wheelchair turning space (based on one twin size bed).

46.2 DOORS:

Doors to all bedrooms required to comply under **521 CMR 46.1**, shall comply with **521 CMR 26.00: DOORS AND DOORWAYS**.

46.3 CLOSETS

All closets in bedrooms required to be *accessible* shall comply with **521 CMR 9.5.8, Closets**.

46.4 ELECTRICAL OUTLETS AND CONTROLS

Shall comply with **521 CMR 39.00: CONTROLS**.

46.5 ALARMS

Shall comply with **521 CMR 40.00: ALARMS**.

521 CMR 47.00: **GROUP 2 BEDROOMS**

47.1 BEDROOMS IN GROUP 2 UNITS

Group 2A units shall provide or be capable of providing wheelchair turning *space* in compliance with **521 CMR 6.3, Wheelchair turning space**. Said wheelchair turning space shall be or capable of being *clear* of the door swing and located at one side of the bed in the primary bedroom (based on a full size bed). Where more than one bedroom is provided, an additional bedroom shall also provide or be capable of providing such wheelchair turning *space* (based on one twin size bed).

In Group 2B units, the bedrooms shall provide wheelchair turning space in compliance with 521 CMR 6.3, Wheelchair Turning Space. Said wheelchair turning space shall be provided, clear of the door swing and located at one side of the bed in the primary bedroom, (based upon a full size bed). Where more than one bedroom is provided, an additional bedroom shall also provide such wheelchair turning space (based on one twin size bed).

47.2 DOORS

Doors to all bedrooms shall comply with **521 CMR 26.00: DOORS AND DOORWAYS**.

47.3 CLOSETS

All closets in bedrooms required to be *accessible* shall comply with **521 CMR 9.5.9, Closets**.

47.4 ELECTRICAL OUTLETS AND CONTROLS

Shall comply with **521 CMR 39.00: CONTROLS**.

47.5 ALARMS

Shall comply with **521 CMR 40.00: ALARMS**.