William F. Martin
Mayor

City of
GREENFIELD, MASSACHUSETTS

DEPARTMENT OF PUBLIC WORKS

City Hall ● 14 Court Square ● Greenfield, MA 01301
Phone 413-772-1528 ● Fax 413-773-9593
DPW@greenfield-ma.gov ● www.greenfield-ma.gov

Maintenance Dredging of Upper Glen Reservoir
Contract DPW 19-04
Addendum #2

August 27, 2018

To all Bidders:

1. This is to correct and clarify the discrepancy between Section 1.6 of the Information for Bidders – Time for Completion, and the requirements of the approved 401 Water Quality Certification issued by DEP. Section 1.6 of the Information for Bidders states each year's dredging shall be completed no later than December 1st of each year. Attachment A of the approved plans referenced in the 401 Water Quality Certification restricts the time of work between July 1st and September 30th of each year. The requirements of Attachment A shall supersede Section 1.6 of the Information for Bidders.

2. The 401 Water Quality Certification references plans prepared by Fuss & O'Neill, dated October 31, 2017. The plans included in the bid packet are dated July 23, 2017. Attached are the October 31, 2017 plans, which shall supersede the July 23, 2017 plans.

The following questions have been received:

1. Is the contractor loading the sediment into the town supplied trucks? If so, how many trucks will the town provide?

Answer: *No. The Town will load dewatered sediment into Town supplied trucks.*

2. Will the silt fence and haybales for the dewatering area remain in place for the duration or will removal be required yearly?

Answer: *The silt fence and haybales can remain in place for the duration of the project but must be maintained during the duration of the project.*

MAINTENANCE DREDGING PLAN

UPPER LEYDEN GLEN RESERVOIR · LEYDEN · MASSACHUSETTS

NOVEMBER 10, 2017

PREPARED FOR

THE TOWN OF GREENFIELD
PUBLIC WORKS
GREENFIELD, MA

PREPARED BY

FUSS & O'NEILL
78 INTERSTATE DRIVE
WEST SPRINGFIELD, MA 01089
413.452.0445
www.fando.com

SHEET INDEX

SHEET No.	SHEET TITLE
GI-001	COVER SHEET
CS-101	SITE PLAN
CS-301	CROSS SECTIONS
CS-501	SITE DETAILS
CS-502	SITE DETAILS

PROJ. No.: 20160380.D10
DATE: 10/31/2017

GI-001

File Path: J:\DWG\P2016\0380\D10\Civil\Plan\20160380.D10_CON.dwg, Layout: COVER SHEET, Plotted: Tuesday, October 31, 2017, User: mtrombley Plotter: DWG TO PDF.PC3 CTB File: FO.STB

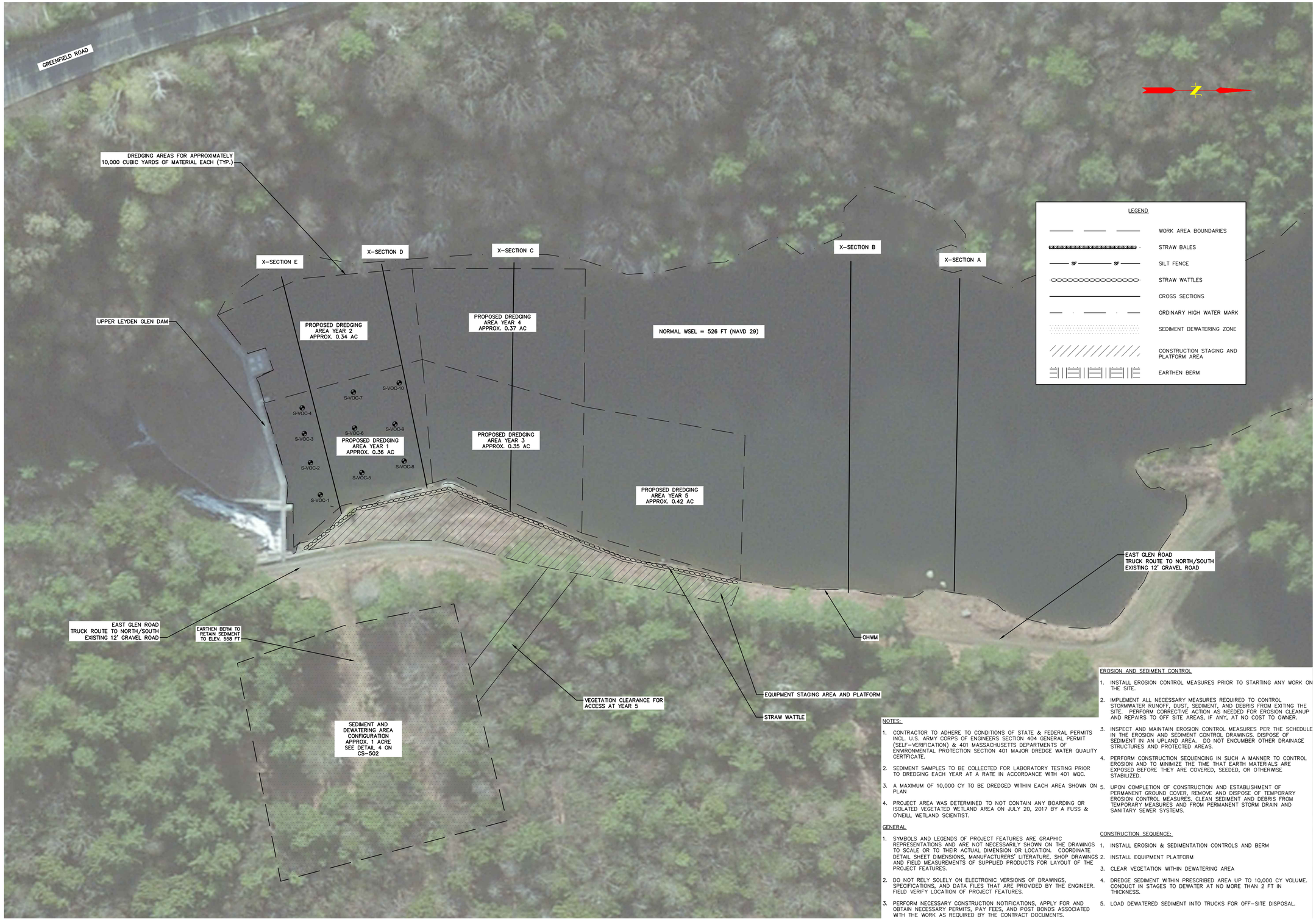

NOTES:

1. CONTRACTOR TO ADHERE TO CONDITIONS OF STATE & FEDERAL PERMITS INCL. U.S. ARMY CORPS OF ENGINEERS SECTION 404 GENERAL PERMIT (SELF-VERIFICATION) & 401 MASSACHUSETTS DEPARTMENTS OF ENVIRONMENTAL PROTECTION SECTION 401 MAJOR DREDGE WATER QUALITY CERTFICATE.
2. SEDIMENT SAMPLES TO BE COLLECTED FOR LABORATORY TESTING PRIOR TO DREDGING EACH YEAR AT A RATE IN ACCORDANCE WITH 401 WQC.
3. A MAXIMUM OF 10,000 CY TO BE DREDGED WITHIN EACH AREA SHOWN ON PLAN
4. PROJECT AREA WAS DETERMINED TO NOT CONTAIN ANY BOARDING OR ISOLATED VEGETATED WETLAND AREA ON JULY 20, 2017 BY A FUSS & O'NEILL WETLAND SCIENTIST.

GENERAL

1. SYMBOLS AND LEGENDS OF PROJECT FEATURES ARE GRAPHIC REPRESENTATIONS AND ARE NOT NECESSARILY SHOWN ON THE DRAWINGS TO SCALE OR TO THEIR ACTUAL DIMENSION OR LOCATION. COORDINATE DETAIL SHEET DIMENSIONS, MANUFACTURERS' LITERATURE, SHOP DRAWINGS AND FIELD MEASUREMENTS OF SUPPLIED PRODUCTS FOR LAYOUT OF THE PROJECT FEATURES.
2. DO NOT RELY SOLELY ON ELECTRONIC VERSIONS OF DRAWINGS, SPECIFICATIONS, AND DATA FILES THAT ARE PROVIDED BY THE ENGINEER. FIELD VERIFY LOCATION OF PROJECT FEATURES.
3. PERFORM NECESSARY CONSTRUCTION NOTIFICATIONS, APPLY FOR AND OBTAIN NECESSARY PERMITS, PAY FEES, AND POST BONDS ASSOCIATED WITH THE WORK AS REQUIRED BY THE CONTRACT DOCUMENTS.

EROSION AND SEDIMENT CONTROL

1. INSTALL EROSION CONTROL MEASURES PRIOR TO STARTING ANY WORK ON THE SITE.
2. IMPLEMENT ALL NECESSARY MEASURES REQUIRED TO CONTROL STORMWATER RUNOFF, DUST, SEDIMENT, AND DEBRIS FROM EXITING THE SITE. PERFORM CORRECTIVE ACTION AS NEEDED FOR EROSION CLEANUP AND REPAIRS TO OFF SITE AREAS, IF ANY, AT NO COST TO OWNER.
3. INSPECT AND MAINTAIN EROSION CONTROL MEASURES PER THE SCHEDULE IN THE EROSION AND SEDIMENT CONTROL DRAWINGS. DISPOSE OF SEDIMENT IN AN UPLAND AREA. DO NOT ENCUMBER OTHER DRAINAGE STRUCTURES AND PROTECTED AREAS.
4. PERFORM CONSTRUCTION SEQUENCING IN SUCH A MANNER TO CONTROL EROSION AND TO MINIMIZE THE TIME THAT EARTH MATERIALS ARE EXPOSED BEFORE THEY ARE COVERED, SEEDED, OR OTHERWISE STABILIZED.
5. UPON COMPLETION OF CONSTRUCTION AND ESTABLISHMENT OF PERMANENT GROUND COVER, REMOVE AND DISPOSE OF TEMPORARY EROSION CONTROL MEASURES. CLEAN SEDIMENT AND DEBRIS FROM TEMPORARY MEASURES AND FROM PERMANENT STORM DRAIN AND SANITARY SEWER SYSTEMS.

CONSTRUCTION SEQUENCE:

1. INSTALL EROSION & SEDIMENTATION CONTROLS AND BERM
2. INSTALL EQUIPMENT PLATFORM
3. CLEAR VEGETATION WITHIN DEWATERING AREA
4. DREDGE SEDIMENT WITHIN PRESCRIBED AREA UP TO 10,000 CY VOLUME. CONDUCT IN STAGES TO DEWATER AT NO MORE THAN 2 FT IN THICKNESS.
5. LOAD DEWATERED SEDIMENT INTO TRUCKS FOR OFF-SITE DISPOSAL.

No.	DATE	DESCRIPTION	DESIGNER	REVIEWER
1.				

SCALE:
HORZ.: 1" = 1'
VERT.:
DATUM:
HORZ.:
VERT.:
40 20 0 40
GRAPHIC SCALE

FUSS & O'NEILL
78 INTERSTATE DRIVE
WEST SPRINGFIELD, MA 01089
413.452.0445
www.fando.com

TOWN OF GREENFIELD

DREDGING PLAN

MAINTENANCE DREDGING OF UPPER LEYDEN GLEN RESERVOIR

GREENFIELD MASSACHUSETTS

PROJ. No.: 20160380.D10
DATE: 10/31/2017

CS-101

File Path: J:\DWG\P2016\0380\D10\Civil\Plan\20160380.D10_CON.dwg Layout: CS-101_PLAN Plotted: Tue, October 31, 2017 - 11:10 AM User: mtrombley
MS VIEW:
LAYER STATE:
Plotter: DWG TO PDF.PC3 CTB File: FO.STB

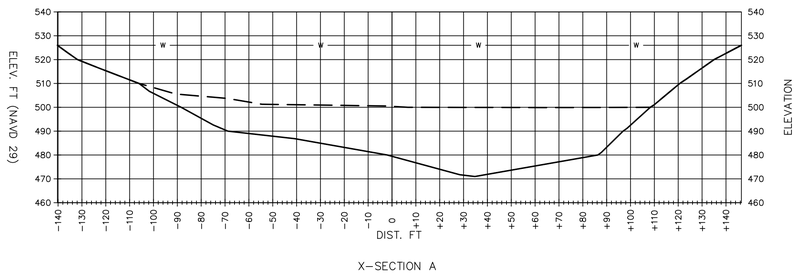

X-SECTION A

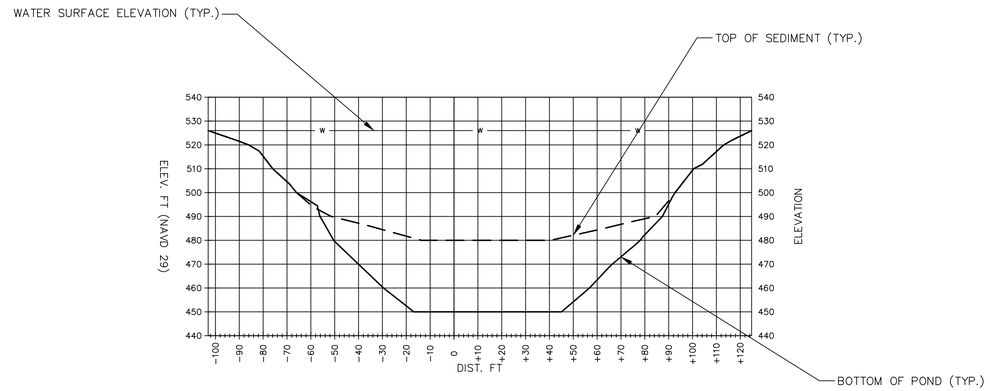

X-SECTION C

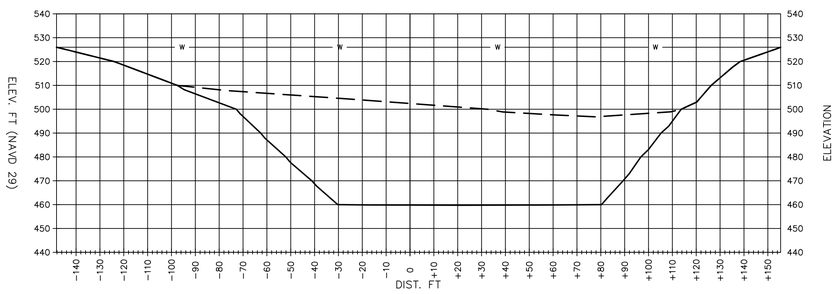

X-SECTION B

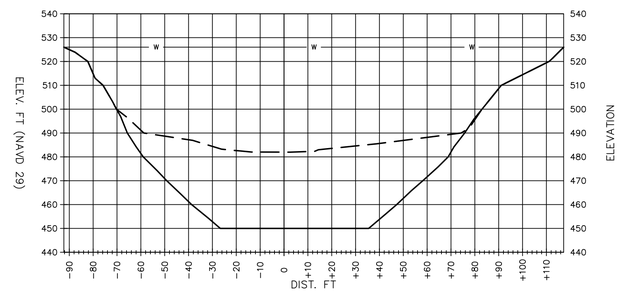

X-SECTION D

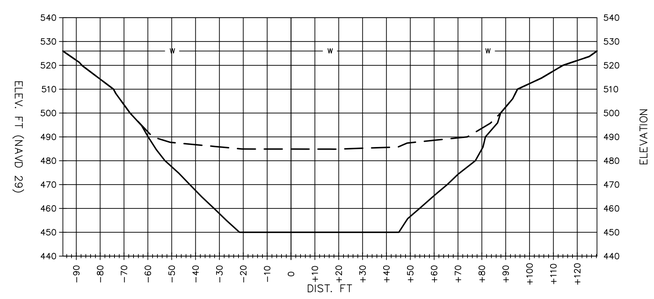

X-SECTION E

NOTE:

1. EXISTING TOP OF SEDIMENT ELEVATIONS BASED ON FIELD MEASUREMENTS TAKEN BY GREENFIELD DPW PERSONNEL ON 06/13/2017
2. ORIGINAL BOTTOM OF POND ELEVATIONS TAKEN FROM "PROPOSED RESERVOIR IMPROVEMENTS TO UPPER LEYDEN GLEN", DATED DEC. 1987 BY GREENFIELD DPW.

No.	DATE	DESCRIPTION	DESIGNER	REVIEWER
1.				

SCALE: HORZ.: 1" = 30' VERT.:
DATUM: HORZ.: VERT.:
30 15 0 30 GRAPHIC SCALE

FUSS & O'NEILL
78 INTERSTATE DRIVE
WEST SPRINGFIELD, MA 01089
413.452.0445
www.fando.com

TOWN OF GREENFIELD
CROSS SECTIONS
MAINTENANCE DREDGING OF UPPER LEYDEN GLEN RESERVOIR
GREENFIELD MASSACHUSETTS

PROJ. No.: 20160380.D10
DATE: 10/31/2017

CS-301

File Path: J:\DWG\P2016\0380\D10\Civil\Plan\20160380.D10_CON.dwg Layout: CS-301 X-SECTIONS Plotted: Tue, October 31, 2017 - 11:10 AM User: mtrombley
MS VIEW: LAYER STATE: Plotter: DWG TO PDF.PC3 CTB File: FO.STB

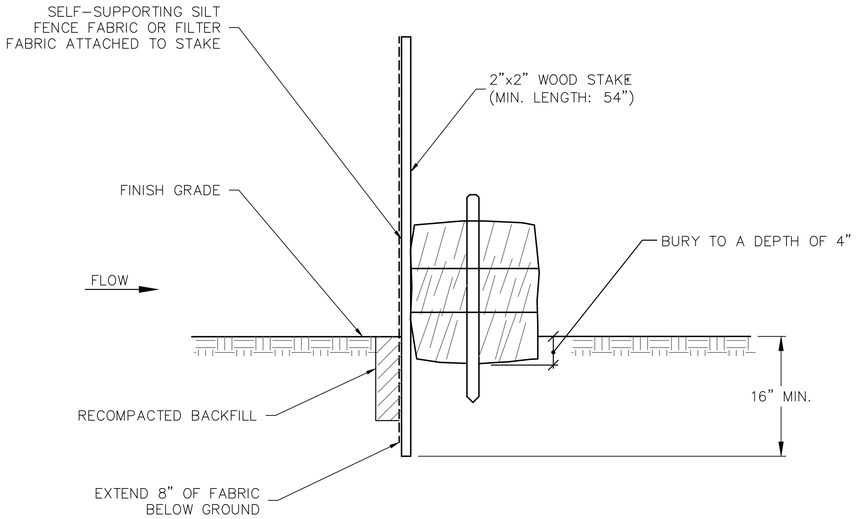

1 SILT FENCE BACKED W/ STRAW BALES
SCALE: N.T.S.

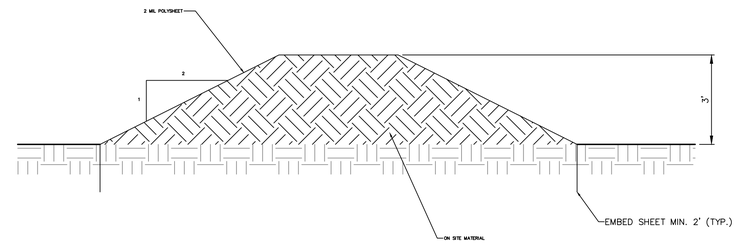

2 EARTHEN BERM
SCALE: N.T.S.

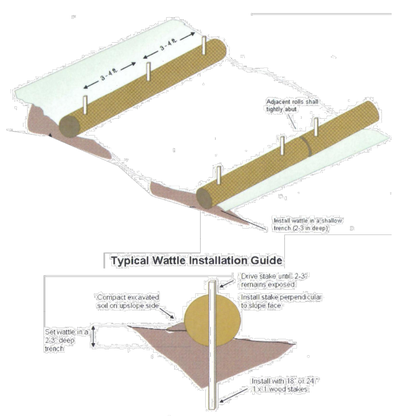

NOTES:

1. WATTLES SHALL BE INSTALLED BY THE CONTRACTOR AS INDICATED ON THE CONTRACT DRAWINGS.
2. WATTLES SHALL BE TRENCHED APPROXIMATE 2–3 INCHES AND STAKED SUCH THAT WATTLES DIRECTLY CONTACT SOIL AND PRECLUDE UNDERMINING OR BLOWOUTS. THE TRENCH SHALL BE APPROXIMATELY 9 INCHES WIDE. STAKES SHALL BE DRIVEN THROUGH THE CENTER OF THE WATTLE AT A SPACING OF 3–4 FEET ON CENTER AND NO GREATER THAN 6"FROM THE EACH END OF THE WATTLE. STAKES SHALL BE 1–INCH BY 1–INCH WOODEN STAKES WITH A LENGTH OF 18–24 INCHES. COMPACT SOIL EXCAVATED TO CREATE TRENCH ON UPHILL SIDE SIDE.
3. ENDS OF ADJACENT WATTLES SHALL BE TIGHTLY BUTTED OR OVERLAPPED SO THAT NO OPENING EXISTS FOR WATER TO PASS THROUGH. WATTLES SHALL BE FREE OF DAMAGE OR DEFECTS WHEN DELIVERED TO THE SHIPPER. NO VEHICLES SHALL BE DRIVEN OVER WATTLES.
4. WATTLES SHALL BE 12–INCH WS1210 MANUFACTURED BY NORTH AMERICAN GREEN, OR APPROVED EQUAL.

3 STRAW WATTLES
SCALE: N.T.S.

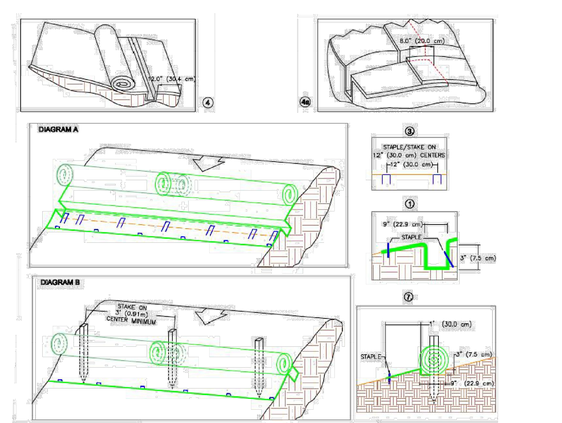

1. BEGIN AT THE LOCATION WHERE THE WATTLE IS TO BE INSTALLED BY EXCAVATING A 3" (7.5CM) DEEP X 9" (22.9 CM) WIDE TRENCH ALONG THE CONTOUR OF THE SLOPE. EXCAVATED SOIL SHOULD BE PLACED UP–SLOPE FROM THE ANCHOR TRENCH.
2. UNROLL THE WATTLE SO THE SECTION WITH THE 2" WIDE TOP NETTING IS THE DOWN SLOPE END (SPLASH APRON). THE SPLASH APRON OF THE WATTLE SHOULD COVER THE ANCHOR TRENCH ENSURING THAT APPROXIMATELY 12" (30 CM) IS EXTENDED BEYOND THE LOWER EDGE OF THE ANCHOR TRENCH. NOTE: SEEDING MUST BE CONDUCTED PRIOR TO INSTALLATION OF THE WATTLE.
3. SECURE THE WATTLE IN THE ANCHOR TRENCH BY PLACING A ROW OF STAPLES/STAKES ON 12" (30 CM) CENTERS ACROSS THE ENTIRE LENGTH OF THE WATTLE. A SECOND ROW OF STAPLES/STAKES MUST BE PLACED ACROSS THE ENTIRE LOWER EDGE OF THE WATTLE SPLASH APRON ON APPROXIMATELY 12" (30 CM) CENTERS, STAGGERED WITH THE FIRST ROW OF STAPLES/STAKES.
4. BEGIN ROLLING THE WATTLE FROM ITS UPPER EDGE (UP–SLOPE EDGE) INTO A CONSISTENT ROLL DIAMETER UNTIL THE ROLL IS LOCATED IN THE ANCHOR TRENCH. PLACE ADDITIONAL ORGANIC MATERIAL (I.E. STRAW, LEAVES, PINE NEEDLES OR LAWN CLIPPINGS) ACROSS THE ENTIRE WIDTH OF THE WATTLE PRIOR TO ROLLING. SEE DIAGRAM 4A FOR SEAMING OF ADJACENT WATTLE ROLLS.
5. STOP ROLLING THE WATTLE WHEN THE ROLL IS LOCATED IN THE ANCHOR TRENCH.
6. SECURE THE WATTLE STRUCTURE TO THE SLOPE SURFACE BY DRIVING APPROXIMATELY 18"–24" (45–60 CM) STAKES THROUGH THE CENTER OF THE ROLL EVERY 3' (0.9 M) ON CENTER. IF TWO WATTLE STRUCTURES ARE SEAMED TOGETHER ENSURE A STAKE IS DRIVEN THROUGH THE SEAM. THE FINAL STRUCTURES DIAMETER WILL DICTATE STAKE LENGTH. LEAVE A SUFFICIENT AMOUNT OF STAKE EXPOSED ABOVE THIS WATTLE TO ENSURE THE STRUCTURE IS NOT COMPRESSED. BOTH LONGITUDINAL ENDS SHOULD BE ANGLED UP SLOPE.
7. BACKFILL AND COMPACT SOIL INTO THE UP–SLOPE PORTION OF THE ANCHOR TRENCH. SMOOTH AND LEVEL ANY SOIL REMAINING ABOVE THE WATTLE NOT USED TO FILL THE ANCHOR TRENCH. PLACE SEED ALONG UP–SLOPE PORTION OF WATTLE IF REQUIRED.

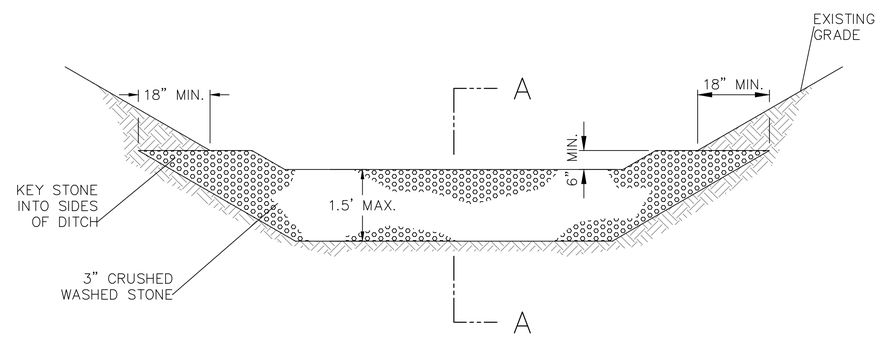

ELEVATION

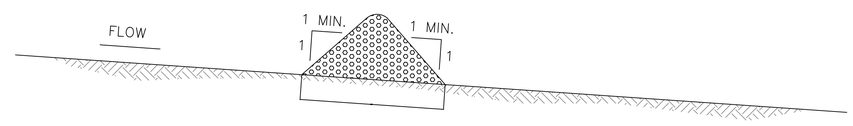

SECTION A–A

4 STONE CHECK DAM
SCALE: N.T.S.

File Path: J:\DWG\P20160380\D10\Civil\Details\20160380.D10_DET.dwg Layout: DET-01 Plotted: Tue, October 31, 2017 - 11:10 AM User: mtrombley
Plotter: DWG TO PDF.PC3 CTB File: FO.STB
LAYER STATE:
MS VIEW:

: J:\DWG\Details_Std_Detail_and_Legend_Sheets_JOBNUMBER_DET01_R1.dwg, Layout: E&S Mon, Mar 24, 2014 - 12:59 PM User: sinons

No.	DATE	DESCRIPTION	DESIGNER / REVIEWER
1.			

SCALE: HORZ.: NTS VERT.:
DATUM: HORZ.: VERT.:
0 GRAPHIC SCALE

FUSS & O'NEILL
78 INTERSTATE DRIVE
WEST SPRINGFIELD, MA 01089
413-452-0445
www.fando.com

TOWN OF GREENFIELD
SITE DETAILS
MAINTENANCE DREDGING OF UPPER LEYDEN GLEN RESERVOIR
GREENFIELD MASSACHUSETTS

PROJ. No.: 20160380.D10
DATE: 10/31/2017

CS-501

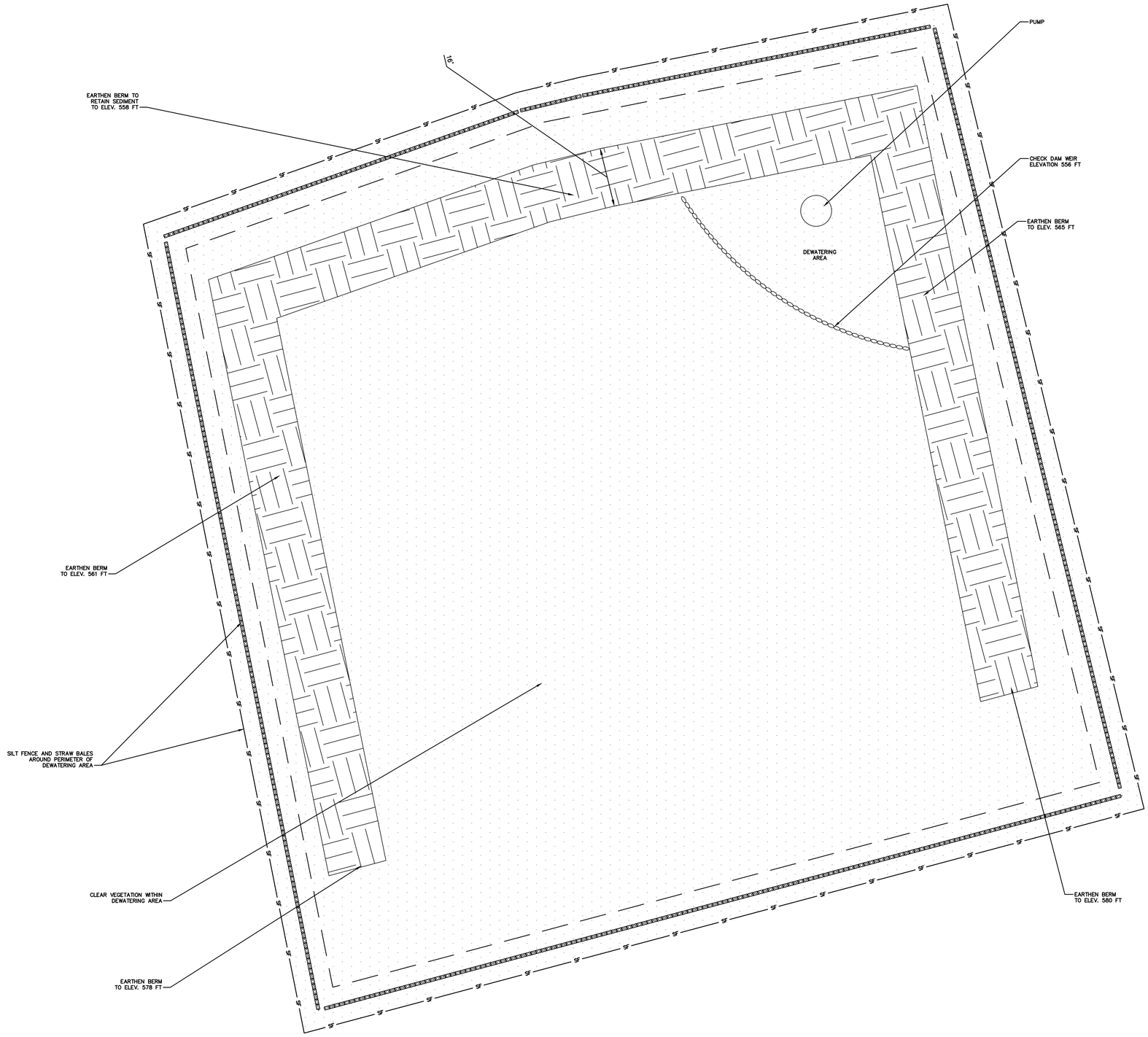

4 SEDIMENT AND DEWATERING AREA CONFIGURATION

SCALE: N.T.S.

No.	DATE	DESCRIPTION	DESIGNER	REVIEWER
1.				

SCALE: HORZ.: NTS
VERT.:
DATUM: HORZ.:
VERT.:
0
GRAPHIC SCALE

FUSS & O'NEILL
78 INTERSTATE DRIVE
WEST SPRINGFIELD, MA 01089
413.452.0445
www.fando.com

TOWN OF GREENFIELD

SITE DETAILS

MAINTENANCE DREDGING OF UPPER LEYDEN GLEN RESERVOIR

GREENFIELD MASSACHUSETTS

PROJ. No.: 20160380.D10
DATE: 10/31/2017

CS-502

File Path: J:\DWG\P2016\0380\D10\Civil\Details\20160380.D10_DET.dwg Layout: DET-02 Plotted: Tue, October 31, 2017 - 11:10 AM User: mtrombley
MS VIEW: LAYER STATE: Plotter: DWG TO PDF.PC3 CTB File: FO.STB

FUSS & O'NEILL

Attachment A: Project Description
Maintenance Dredging of Upper Leyden Glen Reservoir

1. Introduction and Project Purpose

Upper Leyden Glen Reservoir supplies approximately 25-30% of the Town of Greenfield's water supply. The Town proposes to dredge the reservoir to maintain design volume for water supply capacity. The estimated total volume of sediment in the reservoir is 120,000 cubic yards (cy). The estimate is based on depth to sediment data collected in 2016. The reservoir was last dredged in 1988. Due to the large amount of sediment in the reservoir, the Town proposes to dredge up to 50,000 cy near the dam, where the water intake structure is located.

The proposed dredging is subject to regulations under 314 CMR 09 and requires a Major Dredge Project Certification (BRP WW 07) Section 401 Water Quality Certificate from MassDEP since the project involves total dredging of 5,000 cubic yards or greater.

2. Dredging Plan

The Town proposes to conduct maintenance dredging over a period of five (5) years. The maximum yearly sediment volume will be 10,000 cy and the maximum lateral extent of dredging will be limited to that shown on the Site Plan. The dredging is proposed between July 1 and September 30 given the USACE time of year restriction between October 1 and June 30. Proposed dredging methods will involve a clamshell bucket or dragline or a hydraulic dredge. All dredging will be performed with the reservoir pool at normal elevations; no drawdown of the pool is proposed. The dredged sediment will be placed into the dewatering area and removed from the site once dewatered.

3. Sediment Dewatering Plan

A 3 foot high berm will be installed across the downgradient edge of the dewatering area to confine sediments to the dewatering area and to provide a filter for the return water. A maximum dredged sediment depth of two (2) feet will be placed within the area to dry the sediments prior to off-site disposal. The sediments will be dewatered for a period of time long enough to allow loading of the sediment onto trucks without causing significant spillage onto the roadways. A silt fence and strawbales barrier will be constructed around the exterior perimeter of the dewatering area.

4. Equipment Staging Areas

The equipment for mechanical dredging, which may include a crane with a clamshell bucket or dragline or machinery for the hydraulic dredge operations, will be staged on the pond edge in the location shown on the Site Plan. A temporary platform will be constructed to allow the equipment to be set level. Straw wattles will be installed along the bank between the staging and equipment platform and the pond.

5. Sediment Management

The sediment to be dredged is assumed to be clean fill based on the mostly undeveloped and forested land use of the 5.2 square mile drainage area to the drinking water supply reservoir.

It is assumed that the soft sediments will be greater than 10% by weight of particles passing the No. 200 U.S. Standard Series Testing Sieve (nominal opening 0.0029 inches), and sediment characterization

including physical characteristics and chemical constituents are necessary. The Town proposes to collect samples at a rate of 1 per 1,000 cy of sediment, with 3 cores combined into one composite for each annual sampling event. The samples will be collected as representative sediment within the extent of the proposed annual design limits. The sediment samples will be submitted to a laboratory for analysis of the chemical constituents listed under 314 CMR 9.07(2) shown below:

- Arsenic
- Cadmium
- Chromium
- Copper
- Lead
- Mercury
- Nickel
- Zinc
- Polycyclic Aromatic Hydrocarbons (PAHs)
- Polychlorinated Biphenyls (PCBs)
- Extractable Petroleum Hydrocarbons
- Volatile Organic Compounds (VOC)
- Total Organic Carbon
- Percent Water
- Toxicity Characteristic Leaching Procedure (TCLP) (only as applicable based on concentrations of metals or organic compounds)
- Grain Size Distribution – wet sieve (ASTM D422)

The results of the sampling will be provided to MassDEP 14 days prior to commencement of proposed dredging activity each year. The Town proposed to use an off-site disposal location.