CITY OF GREENFIELD
Department of Public Works

CONTRACT DPW 19-08

Bank Row Sidewalk Improvement Project

TABLE OF CONTENTS:

	PAGE #
ADVERTISEMENT FOR BIDDERS	2
INFORMATION FOR BIDDERS	4
FORMS FOR BID	11
-Proposal Form	
-Certificate of Non-Collusion/Tax Compliance Form	
-Non-Discrimination Affirmative Action Certification	
-Foreign Corporation Certification	
-Equal Employment Opportunity Certification	
-Assurance of Compliance (Section 3, HUD Act of 1968)	
-Statement of Bidder's Qualifications	
-Supplemental Bid Data	
-Debarment Statement	
-Contractor's/Sub-Contractor's Certification	
-OSHA Training Certification	
AGREEMENT	28
-Notice to Proceed	
SPECIAL CONDITIONS	33
GENERAL CONDITIONS	35
MEASUREMENT AND PAYMENT	50
TECHNICAL SPECIFICATIONS	53
APPENDIX A MASSACHUSETTS STATE WAGE RATES	
APPENDIX B FEDERAL LABOR STANDARDS PROVISIONS	
APPENDIX C FEDERAL WAGE RATES	
APPENDIX D CDBG GENERAL CONDITIONS	
APPENDIX E CONTRACT DRAWING	

<u>ADVERTISEMENT FOR BIDDERS</u>
DEPARTMENT OF PUBLIC WORKS
14 Court Square
Greenfield, MA 01301

Sealed Proposals addressed to the Department of Public Works, 14 Court Square, Greenfield, Massachusetts and endorsed "Proposal for Contract DPW 19-08, Bank Row Sidewalk Improvement Project" will be accepted by the Department of Public Works in Room 208, on the second floor of City Hall. Bids will be accepted until 2:00 p.m. on Thursday, September 20, 2018, at which time said bids will be publicly opened and read aloud in the Community Meeting Room (#203) on the second floor of City Hall.

Work consists of the replacement of approximately 600 sq. ft. of existing concrete sidewalk on Bank Row adjacent to #11 and #29 Bank Row, the replacement of the existing metal frame and hatch doors within the sidewalk, and the replacement of the existing metal open grate in the sidewalk with a new frame and solid cover.

The Engineer's opinion of probable cost is $18,000.

Plans, specifications, and proposal forms will be emailed upon request by contacting alan.twarog@greenfield-ma.gov or by downloading them from the City's Purchasing Department's webpage at http://greenfield-ma.gov/p/290/Active-BidsRFQRFP. To get on the Bidder's List, proposers should contact the DPW at DPW@greenfield-ma.gov or by calling 413-772-1528 x6104. Plans and Specifications will be available starting September 5, 2018.

The Bid Security from the Contractor in the form of cash, certified check, treasurer's check, or cashier's check, drawn upon a responsible bank in the Commonwealth of Massachusetts or a bid bond in the amount of five percent (5%) of the bid shall be made payable to the City of Greenfield, Massachusetts and shall be enclosed with the bid.

Attention is called to the following:

A. Bids for this project are subject to the provisions of the Massachusetts General Laws Chapter 30, Section 39M as amended.

B. Wages are subject to Massachusetts minimum wage rates as per M.G.L. Chapter 149, Section 26 to 27H inclusive, and federal minimum wage rates pursuant to the Davis-Bacon Act, whichever pays more.

C. All pertinent regulations ordinances and statutes of the City of Greenfield, the State of Massachusetts, and the U.S. Department of Housing & Urban Development will be rigidly enforced.

D. The successful bidder must comply with Chapter 151B as amended, of the Massachusetts General Laws and with the provisions of Executive Order No. 74, as amended by Executive Order No. 116 dated May 1, 1975 pertaining to Equal Opportunity Anti-Discrimination and Affirmative Action.

The responsive and responsible bidder offering the lowest price shall be awarded the project subject to the availability of funding. The City of Greenfield reserves the right to reject any or all bids or to waive any informalities in the bidding.

This project is being funded by the Community Development Block Grant Program, through the Massachusetts Department of Housing & Community Development.

The Contract/Bid/Proposal awarding authority is:

City of Greenfield
Department of Public Works
Greenfield, Massachusetts

INFORMATION FOR BIDDERS

INFORMATION FOR BIDDERS

1.1 **Location and work to be done:**

The work herein specified to be done (herein sometimes referred to as the "Work") consists of the replacement of approximately 600 sq. ft. of existing concrete sidewalk on Bank Row adjacent to #11 and #29 Bank Row, the replacement of the existing metal frame and hatch doors within the sidewalk, and the replacement of the existing metal open grate in the sidewalk with a new frame and solid cover.

The Contractor shall furnish all labor, services, materials, equipment, plant, machinery, apparatus, appliances, tools, supplies, and all other items necessary to do all the work required for the completion of the Work, as specified.

The Work to be done and paid for shall not be limited to the extent mentioned or described, but shall include all incidental work necessary or customarily done for the completion of the work.

1.2 **Questions Regarding Drawings and Documents**. In general, no answers will be given to prospective bidders in reply to an oral question if the question involves an interpretation of the intent or meaning of the Drawings or other Contract Documents, or the equality or use of products or methods other than those designated or described on the drawings or in the specifications. Any information given to bidders other than by means of the Drawings and other Contract Documents, including Addenda, as described below, is given informally, for information and the convenience of the bidder only and is not guaranteed. The bidder agrees that such information shall not be used as the basis of nor shall the giving of any such information entitle the bidder to assert any claim or demand against the owner or the engineer on account thereof.

To receive consideration, such questions shall be submitted in writing to the City at least 7 days before the established date for receipt of bids. If the question involves the equality or use of products or methods it must be accompanied by drawings, specifications or other data in sufficient detail to enable the City to determine the equality or suitability of the product or method. In general, the City will neither approve nor disapprove particular products prior to the opening of Bids; such products will be considered when offered by the Contractor for incorporation into the Work.

The City will set forth as Addenda, which shall become a part of the Contract Documents, such questions received as above provided as in his sole judgment are appropriate or necessary and his decision regarding each. At least three days prior to the receipt of Bids, he will send a copy of these Addenda to those prospective bidders known to have taken out sets of the Drawings and other Contract Documents.

The Contractor agrees to use the products and methods designated or described in the Specifications as amended by the Addenda.

1.3 **Bidders to Investigate**. Bidders are required to submit their Bids upon the following express conditions which shall apply to and be deemed a part of every Bid received, viz:

Bidders must satisfy themselves by personal examinations of the site of the work and by such other means as they may wish, as to the actual conditions there existing, the character and requirements of the Work, the difficulties attendant upon its execution, and the accuracy of all estimated quantities stated in the Bid.

1.4 **Information not Guaranteed**. All information given on the Drawings or in the Contract Documents relating to sub-surface and other conditions, natural phenomena, existing pipes and other structures is from the best sources at present available to the City. All such information is furnished only for the information and convenience of bidders and is not guaranteed.

It is agreed and understood that the City does not warrant or guarantee that the subsurface or other conditions, natural phenomena, existing pipes or other structures encountered during construction, will be the same as those indicated on the Drawings or in the other Contract Documents.

It is agreed further and understood that no bidder or contractor shall use or be entitled to use any of the information made available to him or obtained in any examination made by him in any manner as a basis of or ground for any claim or demand against the City, arising from or by reason of any variance which may exist between the information made available and the actual subsurface or other conditions, natural phenomena, existing pipes or other structures actually encountered during the construction work, except as may otherwise by expressly provided for in the Contract Documents.

1.5 **Submitting Bids**. All Bids must be upon the blank form for Bid annexed hereto, state the proposed price of each item of the Work, both in words and in figures, and be signed by the Bidder with his business address and place of residence. The Bid Security shall be enclosed with the Bid.

Bidders shall submit their Bids bound with the complete volume of attached Contract Documents, including all pages correctly assembled.

Each bid shall be submitted to the City in a sealed envelope. On the outside of the envelope shall be written the bidder's name and address and the name of and description of the project for which the Bid is submitted.

If forwarded by mail, the sealed envelope containing the Bid and marked as directed above, must be enclosed in another envelope addressed to the City.

1.6 **Time for Completion**. The successful bidder will be required to substantially complete the Work no later than **November 1, 2018**.

1.7 **Withdrawal of Bids**. Except as hereinafter in this subsection otherwise expressly

provided, once his Bid is submitted and received by the City for consideration and comparison with other bid similarly submitted, the bidder agrees that he may not and will not withdraw it within 40 (forty) consecutive calendar days after the actual date of the opening of Bids.

Upon proper written request and identifications, Bids may be withdrawn as follows:

1. At any time prior to the designated time for the opening of Bids.

2. Provided the Bid has not therefore been accepted by the City at any time subsequent to the expiration of the period during which the bidder has agreed not to withdraw his Bid. Unless a Bid is withdrawn as provided above, the Bidder agrees that it shall be deemed open for acceptance until the City notifies a Bidder in writing that his Bid is rejected or that the City does not intend to accept it. Notice of acceptance of a Bid shall not constitute rejection of any Bid.

1.8 **Ability and Experience of Bidder**. No award will be made to any Bidder who cannot satisfy the City that he has sufficient ability and experience in this class of work and sufficient capital and plant to enable him to prosecute and complete the Work successfully within the time named. The City decision or judgment on these matters shall be final, conclusive, and binding.

The Bidder is to submit a list of all projects completed within the past five years to include the name of the project, brief description of the project, cost of the project, and contact name and phone number.

The City may make such investigations as it deems necessary, and the Bidder shall furnish to the City, under oath if so required, all such information, and data for this purpose as the City may request.

1.9 **Bids**. The City may reject Bids which in its sole judgment are either incomplete, conditional, obscure or not responsive or which contain additions not called for, erasures not properly initialed, alterations, or similar irregularities, or the City may waive such omissions, conditions or irregularities.

1.10 **Right to Reject Bids**. The City reserves the right to reject any or all Bids, or Alternate Bid Items should the City deem it to be in the public interest to do so.

1.11 **Execution of Agreement**. The Bidder whose bid is accepted will be required and agrees to duly execute the AGREEMENT, after notification that the AGREEMENT is ready for signature.

1.12 **Insurance Certificates.** The Contractor will not be permitted to start any construction work until he has submitted certificates covering all insurance called for, and has obtained approval in writing of such certificates from the City.

Before starting, and until completion of the guarantee period, the Contractor shall procure, deposit, and maintain with the City, insurance satisfactory to the City as follows:

A. Workmen's Compensation and Employer's Liability Insurance as required by the Workmen's Compensation Laws of the Commonwealth of Massachusetts.

B. Comprehensive Commercial Liability Insurance covering Bodily Injury and Property Damage (Broad Form) as follows:

Limits of Liability*	$1,000,000 each occurrence $2,000,000 aggregate

* or $1,000,000 single limit combined Bodily Injury and Property Damage.

The Comprehensive Commercial Liability Policy shall provide insurance for the Contractor for Bodily Injury and Property Damage to third persons arising out of:

1. Work performed by the Contractor himself with his own employees, called "premises operations."

2. Work performed by his subcontractors, called "sublet work" or Independent Contractors (this is referred to as Contractor's Protective Liability).

3. The Contractor's liability assumed under this contract, called "Hold Harmless" clauses or indemnity agreement. (This is referred to as Contractual Liability Insurance).

4. Products liability coverage covering the completed building or installation or products furnished. (This is called Products Liability Insurance for the manufacturer and Complete Operations Liability Insurance for the Contractor).

5. If any work is to be performed below the surface of the ground, the coverage shall be extended to include protection against property damage caused by explosion (including blasting), collapse of structures and damage to underground pipes and utilities. (This is known as "XCU" coverage).

C. Comprehensive Automobile Liability Insurance covering Bodily Injury and Property Damage, as follows:

<u>Limits of Liability</u>

Bodily Injury	$500,000 each person $1,000,000 each accident
Property Damage	$1,000,000 each accident

* or $500,000 single limit combined Bodily Injury and Property Damage.

This insurance is to apply with respect to all owned or hired vehicles of the Contractor and non-ownership protection for all employees of the Contractor engaged in the performance of this contract.

D. All policies shall be so written that the City will be notified of cancellation or restrictive amendment at least 30 days prior to the effective date of such cancellation or amendment. Certificates from the insurance carrier stating the limits of liability and expiration date shall be filed in triplicate with the City before operations are begun. Such certificates not only shall name the types of policy provided, but also shall refer specifically to this Contract* and article and the above paragraphs in accordance with which insurance is being furnished and shall state that such insurance is as required by such paragraphs of this Contract and shall be sufficiently comprehensive as to permit the owner to determine that the required insurance coverage has been provided without the necessity of examining the individual insurance policies.

   If the initial insurance expires prior to completion of the Work, renewal certificates shall be furnished by the date of expiration.

   * If blanket coverage is furnished, this particular Contract need not be referred to.

E. The Contractor shall require each of his sub-contractors to procure and maintain until the completion of that sub-contractor's work, insurance of the types and to the limits specified in paragraphs A to C, inclusive, above. It shall be the responsibility of the Contractor to insure that all his sub-contractors comply with all of the insurance requirements contained herein relating to such sub-contractors.

No insurances required or furnished hereunder shall, in any way, relieve the contractor of, or diminish any of his responsibilities, obligations and liabilities under the Contract.

1.13 **Comparison of Bids**. Bids will be compared on the basis of lump-sum or unit prices stated in the BID.

In the event that there is a discrepancy in the Bid between the lump-sum or unit prices written in words and figures, the prices written in words shall govern.

The City agrees to examine and consider each Bid submitted in consideration of the Bidder's agreements, as hereinabove set forth and as set forth in the BID.

1.14 **Bid Security**. The Bid Security from the contractor in the form of cash, certified check or treasurer's or cashier's check drawn upon a responsible bank in the Commonwealth of Massachusetts or a bid bond in the amount of five percent (5%) of the bid shall be made payable to the City of Greenfield, Massachusetts and shall be enclosed with the bid.

Each such check may be held by the City as security for the fulfillment the bidder's agreements as hereinabove set forth and as set forth in the BID. Should the bidder fail to

fulfill such agreements, his bid check shall become the property of the City as liquidated damages; otherwise, the bid check shall be returned to the bidder as hereinafter provided.

Bid checks will be returned to all except the three lowest bidders within three days, Sundays and legal holidays excluded, after the owner and the accepted bidder have executed the AGREEMENT. In the event that the AGREEMENT has not been executed by both the accepted bidder and the owner within 40 consecutive calendar days after the opening of bids, the bid check will be returned promptly upon demand of any bidder who has not been notified of the acceptance of his bid.

None of the three lowest bids shall be deemed rejected, notwithstanding acceptance of any bid, until the AGREEMENT has been executed by both the City and the accepted bidder.

The bid deposit must be enclosed in the sealed envelope containing the bid.

1.15 **Disputes.** In the event of any dispute as to any of the terms and conditions of this contract, it shall be determined in accord with the laws of the Commonwealth of Massachusetts and the Courts of the Commonwealth of Massachusetts shall have exclusive jurisdiction of the same.

1.16 **Minimum Wage Rates.** In the employment of mechanics, teamsters, chauffeurs, and laborers in the construction of the public work projects, the Minimum Wage rates shall be paid as issued by the Commissioner of Labor and Industries of Massachusetts, in accordance with Sections 26 and 27 of Chapter 149, of the General Laws, as amended, and as included in Appendix A or Federal Wage rates as included in Appendix C, whichever pays more.

1.17 **Equal Employment Opportunity Anti-Discrimination and Affirmative Action.** The successful bidder must comply with Chapter 151B as amended, of the Massachusetts General Laws and with the provisions of Executive Order No. 74, as amended by Executive Order No. 116 dated May 1, 1975 pertaining to Equal Opportunity Anti-Discrimination and Affirmative Action.

1.18 **Notice to Proceed and Pre-Construction Conference**. A written Notice to Proceed shall be issued to the Contractor after receipt of the following: proof of required insurance, an EEO poster has been posted in a conspicuous place at the job site, the Contractor has designated an EEO Coordinator, the Contractor's Certification Concerning Labor Standards and Prevailing Wage Requirements has been submitted to the project manager. No work shall be performed by the Contractor until he has received the Notice to Proceed.

Prior to the start of construction, the Contractor, all subcontractors, the project manager, and the owner shall attend a pre-construction conference. The conference will serve to acquaint the participants with the general plan of contract administration and requirements under which the construction operation is to proceed, and will inform the Contractor, in detail, of the obligations imposed on him and his subcontractors by the Executive Orders concerning Equal Employment Opportunity. The date, time, and place of the conference will be furnished to the Contractor by the project manager.

FORMS FOR BID

_____
Bidder's Name

PROPOSAL FORM

To the City of Greenfield, Massachusetts, (hereinafter called the "Owner") acting through its Department of Public Works, duly authorized therefore, who act solely for said City and without personal liability to themselves:

Gentlemen:

The undersigned _____, as bidder, declares that the only persons or parties interested in this bid as principals are those named herein; that the bidder has carefully examined the proposed form of Proposal and the Specifications (and amendments thereto); and he bids and agrees, if this bid is accepted, that the bidder will furnish all materials and labor necessary for the completion of the Work as specified in the Proposal, in the manner and time therein prescribed and according to the requirements of Owner as herein set forth.

The Bidder agrees that the Owner will have forty (40) consecutive days from date of opening to accept the bid, except as described in the specifications, the unit(s) at the price, therein. The Bidder also understands that the Owner reserves the right to accept or reject any or all bids and to waive any informalities in the Proposals if it is in the Owner's interest to do so. The Advertisement for Bidders, Information for Bidders, Specifications and Proposal Form attached thereto, shall become a contract upon the receipt by the Bidder of written acceptance of this bid by the Owner.

The Bidder will take in full payment, therefore, the following price, to wit:

Item Number	Estimated Quantity	Brief Description; lump-sum price bid in both words and figures	Total in Figures
1	Lump Sum	Mobilization/De-mobilization (Max. 5%) _____dollars and _____cents ($_____)_____	
2	ALL.	Uniformed Traffic Police Two Thousand_____dollars and __Zero____cents ($_____)_$2,000_____	

3	600 S.F.	Removal & Disposal of Existing Concrete Sidewalks _____dollars and _____cents ($_____)_____
4	430 S.F.	Install 4” Sidewalk _____dollars and _____cents ($_____)_____
5	170 S.F.	Install 6” Sidewalk and Curb Cut _____dollars and _____cents ($_____)_____
6	1 Lump Sum	Reconstruct Open Frame & Grate with New Frame & Solid Cover _____dollars and _____cents ($_____)_____
7	1 Lump Sum	Reconstruct Frame & Hatch Doors with New Frame & Hatch Doors _____dollars and _____cents ($_____)_____

If this BID is accepted by the City, the undersigned agrees to complete the entire work provided to be done under the Contract within the time stipulated under INFORMATION FOR BIDDERS or as otherwise expressly provided in the AGREEMENT.

The total price for the base bid, derived as described in the INFORMATION FOR BIDDERS under the heading “Comparison of Bids,” is $*_____.

As provided in the INFORMATION FOR BIDDERS, the bidder hereby agrees that he will not withdraw this BID within 40 consecutive calendar days after the actual date of the opening of BIDS and that, if the City shall accept this BID, the bidder will duly execute and acknowledge the AGREEMENT and furnish, duly executed and acknowledged, the required CONTRACT BONDS

within ten (10) days after notification that the AGREEMENT and other Contract Documents are ready for signature.

Should the bidder fail to fulfill any of his agreements as hereinabove set forth, the City shall have the right to retain as liquidated damages the amount of the bid check which shall become the City's property.

This BID includes Addenda number** _____.

* Bidder must fill in this blank
** To be filled in by Bidder if Addenda are issued

The Bidder, by submittal of this BID, agrees with the Owner that the amount of the bid security deposited with this BID fairly and reasonably represents the amount of damages the Owner will suffer due to the failure of the Bidder to fulfill his agreements as above provided.

The Bidder hereby certifies he shall comply with the minority manpower ration and specific action steps contained in the STATE REQUIREMENTS under Massachusetts Equal Employment Program, including the minority contractor compliance. Prior to the award of the Contract, the Contractor must submit a Contractor's Certification of Compliance. The Contractor receiving the award of the Contract shall be required to obtain from each of its Sub-Contractors and submit to the contracting or administering agency prior to the performance of any work under said Contract a certification by said Sub-Contractor, regardless of tier, that it will comply with the minority manpower ratio and specific affirmative action steps contained in the Massachusetts Equal Employment Program.

_____
Name of Bidder

(SEAL) By _____
(Signature and title of authorized representative)

_____
(Business Address)

_____
(City & State)

Date _____

The Bidder is a corporation incorporated in the State (or Commonwealth) of _____ _____(Bidder must add and delete, as necessary, to make this sentence read correctly).

(Note: If the Bidder is a corporation, affix corporate seal and give below the names of its president, treasurer, and general manager, if any; if a partnership, give full names and residential addresses of all partners, and if an individual, give residential address if different from business address.)

CERTIFICATE OF NON-COLLUSION

The undersigned certifies under penalties of perjury that this bid or proposal has been made and submitted in good faith and without collusion or fraud with any other person. As used in this certification, the word "person' shall mean any natural person, business, partnership, corporation, union, committee, club, or other organization, entity, or group of individuals.

_____
Signature of individual submitting bid or proposal

_____
Name of Business

TAX COMPLIANCE CERTIFICATION

Pursuant to M.G.L. Ch. 62C, Sec. 49A, I certify under the penalties of perjury that I, to the best of my knowledge and belief, am in compliance with all laws of the Commonwealth of Massachusetts relating to taxes, reporting of employees and contractors, and withholding and remitting child support.

_____
Signature of individual submitting bid or proposal

_____
Name of business

NON-DISCRIMINATION AND
AFFIRMATIVE ACTION CERTIFICATION

HOLLY, MYRTLE, PIERCE, QUINCY, SPRING TERR. & WASHINGTON STREETS
SIDEWALK REPLACEMENT PROJECT

The Contractor agrees to comply with all applicable Federal and State statutes, rules and regulations prohibiting discrimination in employment, including but not limited to, the American with Disabilities Act 42 USC 12101, 28 CFR Part 356, or as amended; 29 USC S.791 et. seq.; Executive Orders 227, 237, 246; MGL C 151B; and MGL C.272 S. 92A, S98 et. seq., or any amendments to these provisions. Pursuant to Executive Orders 227 and 246, the Contractor is required to take affirmative actions designed to eliminate the patterns and practices of discrimination including providing written notice of its commitment to non-discrimination to any labor association with which it has an employment agreement, and to certified minority and women-owned businesses and organizations or businesses owned by individuals with disabilities. The City of Greenfield shall not be liable for any costs associated with the Contractor's defense of claims of discrimination.

Contractor

By:_____
(Signature of Authorized Representative)

_____
Title

_____
Date

FOREIGN CORPORATION CERTIFICATION

AFFIDAVIT OF COMPLIANCE
FORM AF – 4A 1/78

EXECUTIVE OFFICE FOR
ADMINISTRATION AND FINANCE

The Commonwealth of Massachusetts

_____ MASSACHUSETTS BUSINESS CORPORATION

_____ NON-PROFIT CORPORATION

_____ FOREIGN (non-Massachusetts) CORPORATION

I, _____, President _____ Clerk

of _____ whose principal office is located

_____

do hereby certify that the above named Corporation has filed with the State Secretary all certificates and annual reports required by Chapter 156B, Section 109 (Business Corporation), by Chapter 181, Section 4 (Foreign Corporation), or by Chapter 180, Section 26A (non-profit Corporation) of the Massachusetts General Laws.

SIGNED UNDER THE PENALTIES OF PERJURY THIS _____ day of _____.

Signature of responsible Corporate Officer: _____

CERTIFICATION OF BIDDER
REGARDING EQUAL EMPLOYMENT OPPORTUNITY

Instructions

This certification is required pursuant to Executive Order 11246 (30 F.R. 12319-25). The implementing rules and regulations provide that any bidder or prospective contractor, or any of their proposed subcontractors, shall state as an initial part of the bid or negotiations of the contract whether it has participated in any previous contract or subcontract subject to the equal opportunity clause, and if so, whether it has filed all compliance reports due under applicable instructions.

Where the certification indicates that the bidder has not filed a compliance report due under applicable instructions, such bidder shall be required to submit a compliance report within seven calendar days after bid opening. No contract shall be awarded unless such report is submitted.

Certification by Bidder

Name and Address of Bidder (include zip code):

1. Bidder has participated in a previous contract or subcontract subject to the Equal Opportunity Clause.

   Yes _____ No _____

2. Compliance reports were required to be filed in connection with such contract or subcontract.

   Yes _____ No _____

3. Bidder has filed all compliance reports due under applicable instructions, including Monthly Employment Utilization Report (257).

   Yes _____ No _____

A. Have you ever been or are you being considered for sanction due to violation of Executive Order 11246, as amended?

   Yes _____ No _____

_____

Name and Title of Signer

_____

Signature Date

ASSURANCE OF COMPLIANCE (SECTION 3, HUD ACT OF 1968)

TRAINING, EMPLOYMENT, AND CONTRACTING OPPORTUNITIES
FOR BUSINESS AND LOWER INCOME PERSONS

A. The work to be performed under this contract is subject to the requirements of section 3 of the Housing and Urban Development Act of 1968, as amended, 12 U.S.C. 1701u (section 3). The purpose of section 3 is to ensure that employment and other economic opportunities generated by HUD assistance or HUD-assisted projects covered by section 3, shall, to the greatest extent feasible, be directed to low- and very low-income persons, particularly persons who are recipients of HUD assistance for housing.

B. The parties to this contract agree to comply with HUD's regulations in 24 CFR part 135, which implement section 3. As evidenced by their execution of this contract, the parties to this contract certify that they are under no contractual or other impediment that would prevent them from complying with the part 135 regulations.

C. The contractor agrees to send to each labor organization or representative of workers with which the contractor has a collective bargaining agreement or other understanding, if any, a notice advising the labor organization or workers' representative of the contractor's commitments under this section 3 clause, and will post copies of the notice in conspicuous places at the work site where both employees and applicants for training and employment positions can see the notice. The notice shall describe the section 3 preference, shall set forth minimum number and job titles subject to hire, availability of apprenticeship and training positions, the qualifications for each; and the name and location of the person(s) taking applications for each of the positions; and the anticipated date the work shall begin.

D. The contractor agrees to include this section 3 clause in every subcontract subject to compliance with regulations in 24 CFR part 135, and agrees to take appropriate action, as provided in an applicable provision of the subcontract or in this section 3 clause, upon a finding that the subcontractor is in violation of the regulations in 24 CFR part 135. The contractor will not subcontract with any subcontractor where the contractor has notice or knowledge that the subcontractor has been found in violation of the regulations in 24 CFR part 135.

E. The contractor will certify that any vacant employment positions, including training positions, that are filled (1) after the contractor is selected but before the contract is executed, and (2) with persons other than those to whom the regulations of 24 CFR part 135 require employment opportunities to be directed, were not filled to circumvent the contractor's obligations under 24 CFR part 135.

F. Noncompliance with HUD's regulations in 24 CFR part 135 may result in sanctions, termination of this contract for default, and debarment or suspension from HUD assisted contracts.

G. With respect to work performed in connection with section 3 covered Indian housing assistance, section 7(b) of the Indian Self-Determination and Education Assistance Act (25 U.S.C. 450e)

also applies to the work to be performed under this contract. Section 7(b) requires that to the greatest extent feasible
(i) preference and opportunities for training and employment shall be given to Indians, and
(ii) preference in the award of contracts and subcontracts shall be given to Indian organizations and Indian-owned Economic Enterprises. Parties to this contract that are subject to the provisions of section 3 and section 7(b) agree to comply with section 3 to the maximum extent feasible, but not in derogation of compliance with section 7(b).

Date: _____ Name of Bidder _____

Authorized Signature _____

STATEMENT OF BIDDER'S QUALIFICATIONS

All questions must be answered, and the data given must be clear and comprehensive. If necessary, questions may be answered on separate attached sheets. The Bidder may submit any additional information he desires.

1. Name of Bidder.

2. Permanent main office address.

3. When organized.

4. If a corporation, where incorporated.

5. How many years have you been engaged in the contracting business under your present firm or trade name?

6. Contracts on hand: (Schedule these, showing amount of each contract and the appropriate dates of completion)

7. General character of work performed by your company.

8. Have you ever failed to complete any work awarded to you? If so, where and why?

9. List the more important projects recently completed by your company, stating the approximate cost for each and the month and year completed.

10. Experience in construction work similar in importance to this project.

11. List your major equipment available for this contract.

12. Background and experience of the principal members of your organization, including the officers.

13. Credit available: $_____.

14. Give bank references: _____

15. Will you, upon request, fill out a detailed financial statement and furnish other information that may be requested by the Owner or the Engineer?

16. The undersigned hereby authorizes and requests a person, firm or corporation to furnish any information requested by the Owner or the Engineer in verification of recitals comprising this Statement of Bidder's Qualifications.

_____

Authorized Signature

SUPPLEMENTAL BID DATA

(MUST BE FILLED IN BY ALL BIDDERS)

I. Pursuant to the Requirements, the Bidder shall provide the following information:

A. All Bidders: Official Post Office Address:

_____

_____

B. Firm, Partnership or Corporation: Title of individual signing Proposal:

_____

1. If Firm or Partnership, names of other members:

_____

_____

_____

2. If Corporation (officers):

_____

_____

_____

II. Proposed Surety:

A. Name: _____

B. Home Office Address: _____

_____

C. Agent's Name & Address:_____

_____

_____

DEBARMENT STATEMENT
(to be used for any public construction project)

Any person or corporation that fails to date, sign with original signature, and submit the following statement shall not be awarded this contract.

DEBARMENT (Chapter 550, Acts of 1991)

The undersigned certifies under penalties of perjury that the said undersigned is not presently debarred from doing public construction work in the Commonwealth of Massachusetts under the provisions of Section 29F of Chapter 29 of the General Laws, or any other applicable debarment provisions of any other Chapter of the General Laws, or any Rule or Regulation promulgated thereunder.

DATE:_____

_____
Typed or Printed Name of Person Signing

_____
Authorized Official's Signature

_____
Company or Corporation

A. **Contractor's Certification** Name of Project _____

A contractor will not be eligible for award of a contract unless such contractor has submitted the following certification, which is deemed a part of the resulting contract:

CONTRACTOR'S CERTIFICATION

_____ certified that:

1. it tends to use the following listed construction trades in the work under the contract _____

_____

_____

and

2. will comply with the minority manpower ration and specific affirmative action steps required by law, and
3. will obtain from each of its Sub-Contractors and submit to the contracting or administering agency prior to the award of any Sub-Contract under this contract the Sub-Contractor certification required by these bid conditions.

_____
Signature of authorized representative
of Contractor.

B. **Sub-Contractor's Certification** Name of Project _____

Prior to the award of any sub-contract, regardless of tier, the prospective sub-contractor must execute and submit to the prime contractor the following certification, which will be deemed a part of the resulting sub-contract:

SUB-CONTRACTOR'S CERTIFICATION

_____ certifies that:

1. it tends to use the following listed construction trades in the work under the sub-contract ____

_____

_____

and;

2. will comply with the minority manpower ration and specific affirmative action steps required by law; and
3. will obtain from each of the sub-contractors prior to the award of any sub-contract under this sub-contractor certification required by these bid conditions.

_____
Signature of Authorized Representative

In order to ensure that the said sub-contractor's certification becomes a part of all sub-contractors under the prime contract, no sub-contract shall be executed until an authorized representative of the City agency (or agencies) administering this project has determined, in writing, that the said certification has been incorporated in such sub-contract, regardless of tier. Any sub-contract executed without such written approval shall be void.

OSHA TRAINING CERTIFICATION

Pursuant to M.G.L. Ch. 30, Sec. 39S(A), I certify under the penalties of perjury to the following:

(1) that I am able to furnish labor that can work in harmony with all other elements of labor employed or to be employed at the work;

(2) that all employees to be employed at the worksite will have successfully completed a course in construction safety and health approved by the United States Occupational Safety and Health Administration that is at least 10 hours in duration at the time the employee begins work and who shall furnish documentation of successful completion of said course with the first certified payroll report for each employee; and

(3) that all employees to be employed in the work subject to this contract have successfully completed a course in construction safety and health approved by the United States Occupational Safety and Health Administration that is at least 10 hours in duration.

_____
(Signature of authorized representative of Bidder)

_____
(Name of authorized representative of Bidder)

_____
(Name of business)

AGREEMENT

AGREEMENT FOR CONTRACT DPW 19-08

Bank Row Sidewalk Improvement Project

THIS AGREEMENT, executed this _____ day of _____
in the year Two Thousand and Eighteen.

(herein referred to as the "AGREEMENT"), by and between the City of Greenfield, Massachusetts, acting by and through its Department of Public Works, duly authorized therefore, which acts solely for said City and without personal liability to itself, party of the first part, and _____ party of the second part.

WITNESSETH, that the parties to these presents, each in consideration of the undertakings, promises, and agreements on the part of the other herein contained, have undertaken, promised and agreed and do hereby undertake, promise, and agree, the party of the first part for itself, its successors and assigns, and the party of the second part for himself and his heirs, executors, administrators, successors and assigns, as follows:

The Contractor agrees to furnish all equipment, machinery, tools and labor, to furnish and deliver all materials required to be furnished and delivered in and about the improvement and to do and perform all work in accordance with the specifications and conditions attached hereto and made a part hereof, in strict conformity with the provisions herein contained and the Advertisement for Bidders, Information for Bidders, Proposal, and General, Supplemental and Special Conditions hereto annexed. All said Advertisement for Bidders, Information for Bidders, Proposal, and General, Supplemental and Special Conditions, and Contract Drawings are hereby specifically made a part of this contract as fully and to the same effect as if the same had been set forth at length herein.

In consideration of the foregoing premises, the Owner agrees to pay and the Contractor agrees to receive as full compensation for everything furnished and done by the Contractor under this contract; including all work required, for all loss or damage arising out of the nature of the work aforesaid, or from the action of the elements, or from any delay or from any unforeseen obstruction or difficulty encountered in the prosecution of the work, and for all risks of every description connected with the work, and for all expenses incurred by or in consequence of the suspension or discontinuance of the work as herein specified, and for well and faithfully completing the work, and the whole thereof, as herein provided, such price or prices as are set out in the accompanying proposal, and for all work required, for which there is no item in the proposal, such compensation as is provided for in the aforesaid specifications.

The Contractor's bid price for this project is _____.

IN WITNESS WHEREOF, the Owner has caused this instrument to be signed and its corporate seal to be hereto affixed in its behalf, and the Contractor has caused this instrument to be signed in its behalf.

AGREEMENT FOR CONTRACT DPW 19-08

Bank Row Sidewalk Improvement Project

FOR THE OWNER,

_____

By the _____

_____

FOR THE CONTRACTOR,

Witness: _____

_____

_____

By the _____

_____

(If a corporation, attach to each signed Agreement a notarized copy of the corporate vote authorizing the signatory to sign this Agreement.)

Approved as to Appropriation:

_____
City Accountant

Certificate of Acknowledgment of Contractor if a Corporation

For AGREEMENT

State of _____)
SS:
County of _____)

On this _____day of_____, 20___,

before me personally came _____

to me known, who being by me duly sworn, did depose and say as follows:

That he resides at _____

and is the _____

of _____

the corporation described in and which executed the foregoing instrument; that he knows the corporate seal of said corporation; that the seal affixed to the foregoing instrument is such corporate seal and it was so affixed by order of the Board of Directors of said corporation; and that by the like order he signed thereto his name and official designation.

_____
Notary Public (Seal)

My commission expires: _____

NOTICE TO PROCEED

Date: _____

Project: Bank Row Sidewalk Improvement Project	
Owner: City of Greenfield, MA	Owner's Contract No.: DPW 19-08
Contract: Bank Row Sidewalk Improvement Project	
Contractor:	
Contractor's Address: *[send Certified Mail, Return Receipt Requested]*	

You are notified that the Contract Times under the above Contract will commence to run on_____. On or before that date, you are to start performing your obligations under the Contract Documents. The date of Substantial Completion is November 1, 2018.

Before you may start any Work at the Site, Paragraph 2.01.B of the General Conditions provides that you and Owner must each deliver to the other (with copies to Engineer and other identified additional insureds and loss payees) certificates of insurance which each is required to purchase and maintain in accordance with the Contract Documents.

	Owner
	Given by:
	Authorized Signature
	Title
	Date

Copy to Engineer

SPECIAL CONDITIONS

SPECIAL CONDITIONS

TITLE

1.1 Construction Warning Signs
1.2 Traffic Control
1.3 Access to Property
1.4 Conflict or Inconsistency
1.5 Percentage of Progress Payments to be Retained

1.1 **Construction Warning Signs.** All construction warning signs shall be erected in accordance with the Manual on Uniform Traffic Control Devices for Streets and Highways. All construction warning signs shall be erected and maintained by the Contractor at their own expense.

1.2 **Traffic Control.** For control of moderate traffic, the Contractor shall provide an adequate number of flagmen employed at his own expense.

Whenever and wherever, in the opinion of the Engineer, traffic is sufficiently congested or public safety is endangered, the Owner will furnish uniformed special officers to direct traffic and to keep traffic off the highway area affected by construction operations. Such officers shall be in addition to the watchmen, required under other provisions of the contract.

The employment or presence of traffic flagmen, special officers, or police shall, in no way, relieve the Contractor of any responsibility or liability, which is his under the terms of the Contract.

1.3 **Access to Property.** The Contractor shall maintain access to all properties whether over sidewalks or driveways through the use of ramps, bridges, or steel plating. Bridging is required for all properties where handicap accessibility must be maintained.

Temporary handicap ramps shall be constructed according to the Commonwealth of Massachusetts Architectural Barrier Board Regulations 521 CMR.

1.4 **Conflict or Inconsistency.** If there be any conflict or inconsistency between the provisions of the SPECIAL CONDITIONS and the provisions of the other Contract Documents, the provision of the SPECIAL CONDITIONS shall prevail. If there be any conflict or inconsistency between the provisions of the AGREEMENT and the provisions of any of the Contract Documents other than the SPECIAL CONDITIONS, the provisions of the AGREEMENT shall prevail.

1.5 **Percentage of Progress Payments to be Retained.** The percentage of value to be retained under that Subsection of the GENERAL CONDITIONS, entitled “Progress Payments,” shall be 5 percent.

GENERAL CONDITIONS

GENERAL CONDITIONS

TITLE

1.1 Definitions……
1.2 Obligations and Liability of Contractor……..
1.3 Planning and Progress Schedules……
1.4 Supervision of Work……
1.5 Patents……..
1.6 Electrical Energy…….
1.7 Compliance with Laws……
1.8 Provisions Required by Law Deemed Inserted……
1.9 Permits…….
1.10 Not to Sublet or Assign……
1.11 Delay by City……
1.12 Time for Completion……
1.13 Liquidated Damages…….
1.14 Employ Sufficient Labor and Equipment…….
1.15 Handling and Distribution……
1.16 Occupying Private Land……..
1.17 Interference With and Protection of Streets……
1.18 Safety……
1.19 Sanitary Regulations……
1.20 Intoxicating Liquors…….
1.21 Access to Work……
1.22 Examination of Work……..
1.23 Defective Work, Etc……
1.24 Precautions During Adverse Weather……..
1.25 Right to Materials……
1.26 Changes……
1.27 Extra Work……..
1.28 Extension of Time on Account of Extra Work……
1.29 Changes Not to Affect Bonds……..
1.30 Claims for Damages……
1.31 Abandonment of Work or Other Default…….
1.32 Prices for Work……
1.33 Formal Acceptance……..
1.34 Progress Estimates……
1.35 Partial Acceptance……
1.36 Final Estimate and Payment…….
1.37 Liens…….
1.38 Claims……
1.39 No Waiver…….
1.40 Liability of City…….
1.41 Guarantee……..
1.42 Cleaning Up……...
1.43 Legal Address of Contractor……..
1.44 Modification of Termination…….

1.1 **Definitions.** Wherever the words hereinafter defined or pronouns used in their stead occur in the Contract Documents, they shall have the following meanings:

The word "Owner" shall mean the City of Greenfield.

The word "Contractor" shall mean the party of the second part above designated.

The word "Specifications" when used herein shall be deemed to refer to both the General and Technical Specifications.

The words "herein", "hereinafter", hereunder" and words of like import shall be deemed to refer to the Contract Documents.

1.2 **Obligations and Liability of Contractor.** The Contractor shall do all the work and perform and furnish all the labor, services, materials, equipment, plant, machinery, apparatus, appliances, tools, supplies and all other things (except as otherwise expressly provided herein) necessary and as herein specified for the proper performance and completion of the Work in the manner and within the time hereinafter specified, in strict accordance with the Specifications and other Contract Documents, in conformity with the directions and to the satisfaction of the City, and at the prices herein agreed upon.

All parts of the Work and all fixtures, equipment, apparatus and other items indicated in the Specifications and all work and material usual and necessary to make the Work complete in all its parts, including all incidental work necessary to make it complete and satisfactory and ready for use and operation, whether or not they are mentioned in the Specifications, shall be furnished and executed the same as if they were called for by the Specifications.

The Contractor shall conduct his work so as to interfere as little as possible with private business and public travel. Wherever and whenever necessary or required, he shall maintain fences, furnish watchmen, maintain lights, and take such other precautions as may be necessary to protect life and property.

The Contractor shall indemnify and save harmless the City and its officers, agents, servants, and employees from and against any and all claims, demands, suits, proceedings liabilities, judgments, awards, losses, damages, costs and expenses, including attorney's fees, on account of bodily injury, sickness, disease or death sustained by any person or persons or injury or damage to or destruction of any property, directly or indirectly arising out of, relating to or in connection with the Work, whether or not due or claimed to be due in whole or in part to the active, passive or concurrent negligence or fault of the Contractor, his officers, agents, servants or employees, any of his subcontractors, the City or any of its respective officers, agents, servants or employees and/or any other person or persons, and whether or not such claims, demands, suits or proceedings are just, unjust, groundless, false or fraudulent; and the Contractor shall and does hereby assume and agrees to pay for the defense of all such claims, demands, suits and proceedings.

The Contractor shall have complete responsibility for the Work and the protection thereof, and for preventing injuries to persons and damage to the Work and property and

utilities on or about the Work, until final completion and final acceptance thereof. He shall, in no way, be relieved of his responsibility by any right of the City to give permission or directions relating to any part of the Work, by any such permission or directions given, or by failure of the City to give such permission or directions. The Contractor shall bear all costs, expenses, losses and damages on account of the quantity or character of the Work or the nature of the land (including but not limited to subsurface conditions) in or under or on which the Work is done being different from those indicated or shown in the Contract Documents or from what was estimated or expected, or on account of the weather, elements, or other causes.

The Contractor shall conduct his operations so as not to damage existing structures or work installed either by him or by other contractors. In case of any such damage resulting from his operations, he shall repair and make good as new the damaged portions at his own expense with the consent of the damaged party. In the event that consent is not given, the Contractor shall continue to be liable for the damage caused.

The Contractor shall be as fully responsible to the City for the acts and omissions of his subcontractors, their officers, agents, servants and employees as he is for his own acts and omissions and those of his officers, agents, servants and employees.

Should the Contractor sustain any loss, damage or delay through any act or omission of any other contractor or any subcontractor of any such other contractor, the Contractor shall have no claim against the City therefore, other than for any extension of time, but shall have recourse solely to such other contractor or subcontractor.

If any other contractor or any subcontractor of any such other contractor shall suffer or claim to have suffered loss, damage or delay by reason of the acts or omissions of the Contractor or of any of his subcontractors, the Contractor agrees to assume the defense against any such claim and to reimburse such other contractor or subcontractor for such loss or damage. The Contractor agrees to and does hereby indemnify and save harmless the City from and against any and all claims by such other contractors or subcontractors alleging such loss, damage or delay and from and against any and all claims, demands, suits, proceedings, liabilities, judgments, awards, losses, damages, costs and expenses, including attorneys' fees, arising out of, relating to or resulting from such claims.

The Contractor shall promptly pay all federal, state and local taxes which may be assessed against him in connection with the Work or his operations under the AGREEMENT and/or the other Contract Documents, including but not limited to, taxes attributable to the purchase of material and equipment, to the performance of services, and the employment of persons in the prosecution of the Work.

1.3 **Planning and Progress Schedules.** The Contractor shall submit to and for the approval of the Engineer, a detailed schedule of operations. The schedule shall show the proposed methods of construction and sequence of work and the time the Contractor proposes to complete the various items of work within the time specified in the Contract. No work shall begin until the Progress Schedule is approved by the Engineer.

If the Contractor's operations are materially affected by changes in the plans or in the quantity of the Work or if he has failed to comply with the submitted and approved

schedule, the Contractor shall submit a revised schedule if requested by the Engineer within seven days after the date of the Engineer's request. This revised schedule shall show how the Contractor proposes to prosecute the balance of the Work, so as to complete the Work within the time specified in the Contract.

1.4 **Supervision of Work.** The Contractor shall be solely responsible for supervision of the Work, shall give the Work the constant attention necessary to ensure the expeditious and orderly progress thereof, and shall cooperate with the City in every possible way.

At all times, the Contractor shall have as his agent on the Work a competent superintendent capable of reading and thoroughly understanding the Specifications, with full authority to execute the directions of the City, without delay, and to supply promptly such labor, services, materials, equipment, plant, apparatus, appliances, tools, supplies and other items as may be required. Such superintendent shall not be removed from the Work without the prior written consent of the City. If, in the opinion of the City, the superintendent or any successor proves incompetent, the Contractor shall replace him with another person approved by the City; such approval, however, shall, in no way, relieve or diminish the Contractor's responsibility for the supervision of the Work.

Whenever the Contractor or his agent or superintendent is not present on any part of the Work where it may be necessary to give directions or instructions with respect to such Work, such directions or instructions may be given by the City to, and shall be received and obeyed by the foreman or any other person in charge of the particular work involved.

1.5 **Patents.** The Contractor shall indemnify and save harmless the City and all persons acting for or on behalf of the City from all claims and liability of any nature or kind, and all damages, costs and expenses, including attorneys' fees, arising from or occasioned by any infringement or alleged infringement of any patents or patent rights on any invention, process, material, equipment, article or apparatus, or any part thereof, furnished and installed by the Contractor, or arising from or occasioned by the use or manufacture thereof, including their use by the City.

1.6 **Electrical Energy.** The Contractor shall make all necessary applications and arrangements and pay all fees and charges for electrical energy for power and light necessary for the proper completion of the Work and during its entire progress. The Contractor shall provide and pay for all temporary wiring, switches, connections and meters.

The Contractor shall provide sufficient lighting so that all work may be done in a workman like manner when there is not sufficient daylight.

1.7 **Compliance with Laws.** The Contractor shall keep himself fully informed of all existing and future federal, state and local laws, ordinances, rules, and regulations affecting those engaged or employed on the Work, the material and equipment used in the Work or the conduct of the Work, and of all orders, decrees and other requirements of bodies or tribunals having any jurisdiction or authority over the same. If any discrepancy or inconsistency is discovered in the Specifications or other Contract Documents in relation to any such law, ordinance, rule, regulation, order, decree, or other requirement, the Contractor shall forthwith report the same to the City in writing. The Contractor shall, at

all times, observe and comply with, and cause all his agents, servants, employees and subcontractors to observe and comply with all such existing and future laws, ordinances, rules, regulations, orders, decrees and other requirements, and he shall protect, indemnify and save harmless the City, its officers, agents, servants and employees, from and against any and all claims, demands, suits, proceedings, liabilities, judgments, penalties, losses, damages, costs and expenses, including attorneys' fees, arising from or based upon any violation or claimed violation of any such law, ordinance, rule, regulation, order, decree or other requirement, whether committed by the Contractor or any of his agents, servants, employees or subcontractors.

1.8 **Provisions Required by Law Deemed Inserted.** Each and every provision of law and clause required by law to be inserted in the Contract shall be deemed to be inserted herein, and the Contract shall be read and enforced as though they were included herein. If through mistake or otherwise any such provision is not inserted, or is not correctly inserted, then upon the application of either party the Contract shall forthwith be physically amended to make such insertion.

1.9 **Permits.** The Contractor shall, at his own expense, take out and maintain all necessary permits from the county, municipal, or other public authorities; shall give all notices required by law; and shall post all bonds and pay all fees and charges incident to the due and lawful prosecution of the Work.

1.10 **Not to Sublet or Assign.** The Contractor shall constantly give his personal attention to the faithful prosecution of the Work, shall keep the same under his personal control, shall not assign the Contract or sublet the Work or any part thereof without the previous written consent of the City, and shall not assign any of the monies payable under the Contract, or his claim thereto, unless by and with the like written consent of the City and the surety on the contract bonds. Any assignment or subletting in violation hereof shall be void and unenforceable.

1.11 **Delay by Town.** The City may delay the beginning of the Work or any part thereof if the necessary lands or rights of way for such work shall not have been obtained. The Contractor shall have no claim for additional compensation or damages on account of such delay, but shall be entitled only to an extension of time as hereinafter provided.

1.12 **Time for Completion.** The rate of progress shall be such that the Work shall be performed and completed in accordance with the Contract before the expiration of the time limit stipulated under INFORMATION FOR BIDDERS, except as otherwise expressly provided herein.

It is agreed that the rate of progress herein required has been purposely made low enough to allow for the ordinary and foreseeable delays incident to work of this character. No extension of time will be given for ordinary or foreseeable delays, inclement weather, or accidents, and the occurrence of such will not relieve the Contractor from the necessity of maintaining this rate of progress and completing the Work within the stipulated time limit.

If delays are caused by acts of God, acts of Government, unavoidable strikes, extra work, or other causes or contingencies clearly beyond the control or responsibility of the

Contractor, the Contractor may be entitled to additional time to perform and complete the Work, provided that the Contractor shall, within ten (10) days from the beginning of such delay notify the City, in writing, of the cause and particulars of the delay. Upon receipt of such notification, the City shall review and evaluate the cause and extent of the delay. If, under the terms of the AGREEMENT, the delay is properly excusable, the City will, in writing, appropriately extend the time for completion of the Work. The Contractor agrees that he shall not have or assert any claim for nor shall he be entitled to any additional compensation or damages on account of such delays.

1.13 **Liquidated Damages.** In case the Contractor fails to complete the Work satisfactorily on or before the date of completion fixed herein or as duly extended as hereinbefore provided, the Contractor agrees that the City shall deduct from the payments due the Contractor each month, the sum of five hundred ($500) dollars for each calendar day of delay. If the payments due the Contractor are less than the amount of such liquidated damages, said damages shall be deducted from any such monies due or to become due the Contractor, and, in case such damages shall exceed the amount of all monies due or to become due the Contractor, the Contractor or his surety shall pay the balance to the Owner.

1.14 **Employ Sufficient Labor and Equipment.** If, in the sole judgment of the City, the Contractor is not employing sufficient labor, plant, equipment or other means to complete the Work within the time specified, the City may, after giving written notice, require the Contractor to employ such additional labor, plant, equipment and other means as the City deems necessary to enable the Work to progress properly.

1.15 **Handling and Distribution.** The Contractor shall handle, haul, and distribute all materials on the different portions of the Work, as necessary or required; shall provide suitable and adequate storage room for materials and equipment during the progress of the Work, and be responsible for the protection, loss of, or damage to materials and equipment furnished by him, until the final completion and acceptance of the Work.

1.16 **Occupying Private Land.** The Contractor shall not (except after written consent from the proper parties) enter or occupy with men, tools, materials, or equipment, any land outside the rights-of-way or property of the Owner. A copy of the written consent shall be given to the Engineer.

1.17 **Interference With and Protection of Streets.** The Contractor shall not close or obstruct any portion of a street, road, or private way without obtaining permits from the proper authorities. If any street, road or private way shall be rendered unsafe by the Contractor's operations, he shall make such repairs or provide such temporary ways or guards as shall be acceptable to the City.

Streets, roads, private ways, and walks not closed shall be maintained passable and safe by the Contractor, who shall assume and have full responsibility for the adequacy and safety of provisions made therefore.

The Contractor shall, at least 24 hours in advance, notify the Police and Fire Departments, in writing, with a copy to the Department of Public Works, if the closure of a street or road is necessary. He shall cooperate with the Police Department in the

establishment of alternate routes and shall provide adequate detour signs, plainly marked and well lighted, in order to minimize confusion.

1.18 **Safety.** The Contractor shall take all necessary precautions and provide all necessary safeguards to prevent personal injury and property damage. The Contractor shall provide protection for all persons including but not limited to his employees and employees of other contractors or subcontractors; members of the public; and employees, agents, and representatives of the City, and regulatory agencies that may be on or about the Work. The Contractor shall provide protection for all public and private property including but not limited to structures, pipes and utilities, above and below ground.

The Contractor shall provide and maintain all necessary safety equipment such as fences, barriers, signs, lights, walkways, guards and fire prevention and fire fighting equipment and shall take such other action as is required to fulfill his obligations under this subsection.

The Contractor shall comply with all applicable federal, state and local laws, ordinances, rules and regulations and lawful orders of all authorities having jurisdiction for the safety of persons and protection of property.

The Contractor shall designate a responsible member of his organization at the site whose duty shall be the prevention of accidents. This responsible person shall have the authority to take immediate action to correct unsafe or hazardous conditions and to enforce safety precautions and programs.

1.19 **Sanitary Regulations.** The Contractor shall provide adequate sanitary facilities for the use of those employed on the Work. Such facilities shall be made available when the first employees arrive on the site of the Work, shall be properly secluded from public observation, and shall be constructed and maintained during the progress of the Work in suitable numbers and at such points and in such manner as may be required or approved.

The Contractor shall maintain the sanitary facilities in a satisfactory and sanitary condition at all times and shall enforce their use. He shall rigorously prohibit the committing of nuisances on the site of the Work, on the lands of the Owner, or on adjacent property.

The City shall have the right to inspect such facilities at all times to determine whether or not they are being properly and adequately maintained.

1.20 **Intoxicating Liquors.** The Contractor shall not sell and shall neither permit nor suffer the introduction or use of intoxicating liquors upon or about the Work.

1.21 **Access to Work.** The City and its officers, agents, servants and employees may at all times and for any and all purposes, enter upon the Work and the site thereof and the premises used by the Contractor, and the Contractor shall at all times provide safe and proper facilities therefore.

1.22 **Examination of the Work.** The City shall be furnished by the Contractor with every reasonable facility for examining and inspecting the Work and for ascertaining that the

Work is being performed in accordance with the requirements and intent of the Contract, even to the extent of requiring the uncovering or taking down portions of finished work by the Contractor.

Should the work thus uncovered or taken down prove satisfactory, the cost of uncovering or taking down and the replacement thereof shall be considered as extra work unless the original work was done in violation of the Contract in point in time or in the absence of the Engineer or his inspector and without his written authorization, in which case said cost shall be borne by the Contractor. Should the work uncovered or taken down prove unsatisfactory, said cost shall likewise be borne by the Contractor.

Examination or inspection of the Work shall not relieve the Contractor of any of his obligations to perform and complete the Work as required by the Contract.

1.23 **Defective Work, Etc.** Until acceptance and during the applicable guarantee period thereafter, the Contractor shall promptly, without charge, repair, correct or replace work, equipment, materials, apparatus or parts thereof which are defective, damaged or unsuitable or which in any way fail to comply with or be in strict accordance with the provisions and requirements of the Contract or applicable guarantee and shall pay to the City all resulting costs, expenses, losses or damages suffered by the City.

If any material, equipment, apparatus or other items brought upon the site for use or incorporation in the Work, or selected for the same, is rejected by the City as unsuitable or not in conformity with the Specifications or any of the other Contract Documents, the Contractor shall forthwith remove such materials, equipment, apparatus and other items from the site of the Work and shall at his own cost and expense make good and replace the same.

1.24 **Precautions During Adverse Weather.** During adverse weather and against the possibility thereof, the Contractor shall take all necessary precautions so that the Work may be properly done, and satisfactory in all respects.

1.25 **Right to Materials.** Nothing in the Contract shall be construed as vesting in the Contractor any right of property in the materials, equipment, apparatus and other items furnished after they have been installed or incorporated in or attached or affixed to the Work or the site, but all such materials, equipment, apparatus and other items shall, upon being so installed, incorporated, attached or affixed, become the property of the City. Nothing in this subsection shall relieve the Contractor of his duty to protect and maintain all such materials, equipment, apparatus and other items.

1.26 **Changes.** The City may make changes in the Work and in the Specifications therefore by making alterations therein, additions thereto or omissions therefrom. All work resulting from such changes shall be performed and furnished under and pursuant to the terms and conditions of the Contract. If such changes result in an increase or decrease in the work to be done hereunder, or increase or decrease the quantities thereof, adjustment in compensation shall be made therefore at the unit prices stipulated in the Contract for such work.

Except in an emergency endangering life or property, no change shall be made unless in pursuance of a written order from the City authorizing the change, and no claim for additional compensation shall be valid unless the change is so ordered.

The Contractor agrees that he shall neither have or assert any claim for or be entitled to any additional compensation for damages or for loss of anticipated profits on work that is eliminated.

1.27 **Extra Work.** The Contractor shall perform any extra work (work in connection with the Contract but not provided for herein) when and as ordered in writing by the City, at the unit prices stipulated in the Contract for such work or, if none are so stipulated, either (a) at the price agreed upon before such work is commenced and named in the written order for such work, or (b) if the City so elects, for the actual cost of such work, as determined by the Contractor and approved by the City, plus a percentage of such cost, as set forth below. No extra work shall be paid for unless specifically ordered as such in writing by the City.

The cost of extra work done under (b) above shall include the actual cost to the Contractor of materials used and equipment installed, common and skilled labor, and foremen, and the fair rental of all machinery and equipment used on the extra work for the period of such use.

At the request of the City, the Contractor shall furnish itemized statement of the cost of the extra work ordered as above and give the City access to all records, accounts, bills and vouchers and correspondence relating thereto.

The Contractor may include in the cost of extra work the amounts of additional premiums, if any, (other than premiums on bonds) paid on the required insurance on account of such extra work, of Social Security or other direct assessments upon the Contractor's payroll by federal or other properly authorized public agencies, and of other approved assessments when such assessments are not normally included in payments made by the Contractor directly to his employees, but in fact, are, and are customarily recognized as, part of the cost of doing work.

The fair rental of all machinery and equipment shall be based upon the most recent edition of "Compilation of Rental Rates for Construction Equipment", published by the Associated Equipment Distributors, or a similar publication approved by the City. Rental for machinery or equipment shall be based upon an appropriate fraction of the approved monthly rate schedule. If said extra work requires the use of machinery or equipment not already on the site of the Work, the cost of transportation, not exceeding a distance of 100 miles, of such machinery or equipment to and from the Work shall be added to the fair monthly rate; provided however, that this shall not apply to machinery or equipment already required to be furnished under the terms of the Contract.

The Contractor shall not include in the cost of extra work any cost or rental of small tools, building, or any portion of the time of the Contractor, his superintendent, or his office and engineering staff.

To the cost of extra work done by the Contractor's own forces under (b) above (determined as stated above), the Contractor shall add 15 percent to cover his overhead, use of capital, the premium on the bonds as assessed upon the amount of this extra work, and profit.

In the case of extra work done under (b) above by a subcontractor, the subcontractor shall compute, as above, his cost for the extra work, to which he shall add 15 percent as in the case of the Contractor, and the Contractor shall be allowed an additional 15 percent of the subcontractor's cost for the extra work to cover the costs of the Contractor's overhead, use of capital, the premium on the bonds as assessed upon the amount of this extra work, and profit. Said subcontractor's cost must be reasonable and approved by the City.

If extra work is done under (b) above, the Contractor and/or subcontractor shall keep daily records of such extra work. The daily record shall include the names of men employed, the nature of the work performed, and hours worked, materials and equipment incorporated, and machinery or equipment used, if any, in the prosecution of such extra work. This daily record, to constitute verification that the work was done, must be signed both by the Contractor's authorized representative and by the City. A separate daily record shall be submitted for each extra work order.

1.28 **Extension of Time on Account of Extra Work.** When extra work is ordered near the completion of the Contract or at any time during the progress of the Work which unavoidably increases the time for the completion of the Work, an extension of time shall be granted as hereinbefore provided.

1.29 **Changes Not to Affect Bonds.** It is distinctly agreed and understood that any changes made in the Work or the drawings or specifications therefore (whether such changes increase or decrease the amount thereof or the time required for its performance) or any changes in the manner or time of payments made by the City to the Contractor, or any other modifications of the Contract, shall in no way annul, release, diminish or affect the liability of the surety on the contract bonds given by the Contractor, it being the intent hereof that notwithstanding such changes the liability of the surety on said bonds continue and remain in full force and effect.

1.30 **Claims for Damages.** If the Contractor makes claim to any damages alleged to have been sustained by breach of contract or otherwise, he shall, within ten (10) days after occurrence of the alleged breach or within ten (10) days after such damages are alleged to have been sustained, whichever date is earlier, file with the City a written, itemized statement in triplicate of the details of the alleged breach and the details and amount of the alleged damages. The Contractor agrees that unless such statement is made and filed as so required, his claim for damages shall be deemed waived, invalid and unenforceable, and that he shall not be entitled to any compensation for any such alleged damages.

1.31 **Abandonment of Work or Other Default.** If the Work shall be abandoned, or any part thereof shall be sublet without previous written consent of the City, or the Contract or any monies payable hereunder shall be assigned otherwise than as herein specified, that the conditions herein specified as to rate of progress are not being complied with, or that the Work or any part thereof is being unnecessarily or unreasonably delayed, or that the Contractor has violated or is in default under any of the provisions of the Contract, or if

the Contractor becomes bankrupt or insolvent or goes or is put into liquidation or dissolution, either voluntarily or involuntarily, or petitions for an arrangement or reorganization under the Bankruptcy Act, or makes a general assignment for the benefit of creditors or otherwise acknowledges insolvency, the happening of any of which shall be and constitute a default under the Contract, the City may notify the Contractor in writing, with a copy of such notice mailed to the surety, to discontinue all work or any part thereof; thereupon the Contractor shall discontinue such work or such part thereof as the City may designate; and the City may, upon giving such notice by contract or otherwise as it may determine, complete the Work or such part thereof and charge the entire cost and expense of so completing the Work or such part thereof to the Contractor. In addition to the said entire cost and expense of completing the work, the City shall be entitled to reimbursement from the Contractor and the Contractor agrees to pay to the City any losses, damages, costs and expenses, including attorney's fees, sustained or incurred by the City by reason of any of the foregoing causes. For the purposes of such completion, the City may, for itself, of for any contractors employed by the City, take possession of and use or cause to be used any and all materials, equipment, plant, machinery, appliances, tools, supplies and such other items of every description that may be found or located at the site of the Work.

All costs, expenses, losses, damages, attorney's fees and any and all other charges incurred by the City under this subsection shall be charged against the Contractor and deducted and/or paid by the City out of the monies due or payable or to become due or payable under the Contract to the Contractor; in computing the amounts chargeable to the Contractor, the City shall not be held to a basis of the lowest prices for which the completion of the Work or any part thereof might have been accomplished, but all sums actually paid or obligated therefore to effect its prompt completion shall be charged to and against the account of the Contractor. In case the costs, expenses, losses, damages, attorney's fees and other charges together with all payments therefore made to or for the account of the Contractor if the Work had been properly performed and completed by the Contractor, the Contractor shall be entitled to receive the difference, and, in case such costs, expenses, losses, damages, attorney's fees and other charges, together with all payments therefore made to or for the account of the Contractor, shall exceed the said sum, the Contractor shall pay the amount of the excess to the City.

1.32 **Prices for Work.** The City shall pay and the Contractor shall receive the prices stipulated in the BID made a part hereof as full compensation for everything performed and furnished and for all risks and obligations undertaken by the Contractor under and as required by the Contract.

1.33 **Formal Acceptance.** Fixing of the date of completion and acceptance of the Work or a specified part thereof shall only be effective when accomplished by a writing specifically so stating and signed by the City.

1.34 **Progress Estimates.** Once a month, except as hereinafter provided, the City shall make an estimate in writing of the total amount and value of the work done to the first of the month by the Contractor. The City shall retain 5 percent of such estimated value, as part security for fulfillment of the Contract by the Contractor and shall deduct from the balance of all previous payments made to the Contractor, all sums chargeable against the Contractor and all sums to be retained under the provisions of the Contract. The City

shall pay monthly to the Contractor the balance not deducted and/or retained as aforesaid, except that payment may be withheld at any time, if in the judgment of the City, the work is not proceeding in accordance with the Contract. If the City deems it expedient to do so, it may cause estimates and payments to be made more frequently than once in each month. No progress estimate or payment need be made when in the judgment of the City, the total value of the Work done since the last estimate amounts to less than $5,000.

Estimates of lump-sum items shall be based on a schedule dividing each such item into its appropriate component part, together with a quantity and a unit price for each part so that the sum of the products of prices and quantities will equal the contract price for the item. This schedule shall be submitted by Contractor for and must have the approval of the City before the first estimate becomes due.

If the City determines that the progress of the Work will be benefited by the delivery to the site of certain materials and equipment, when available, in advance of actual requirement therefore and if such materials and equipment are delivered and properly stored and protected, the cost to the Contractor or subcontractor as established by invoices or other suitable vouchers satisfactory to the City, less the retained percentages as above provided, may be included in the progress estimates; provided always that there be duly executed and delivered by the Contractor to the City at the same time a Bill of Sale in form satisfactory to the City, transferring and assigning to the City full ownership and title to such materials or equipment.

1.35 **Partial Acceptance.** The City may at any time, in a written order to the Contractor (1) declare that he intends to use a specified part of the Work which, in his opinion, is sufficiently complete, in accordance with the Contract Documents, to permit its use; (2) enclose a tentative list of items remaining to be completed or corrected, and (3) fix the date of acceptance of that specified part of the Work.

Within 45 days after acceptance under this subsection, the City shall make an estimate, in writing, of the amount and value of the part of the Work, so accepted and shall pay said amount to the Contractor after deducting therefrom all previous payments, all charges against the Contractor as provided for hereunder, and all amounts to be retained under the provisions of the Contract, said payment to be made at the time of the next monthly progress estimate.

Acceptance by the City under this sub-section shall not relieve the Contractor of any obligations under the Contract Documents except to the extent agreed upon in writing between the City and the Contractor.

The City shall have the right to exclude the Contractor from any part of the Work which has been accepted, but the City will allow the Contractor reasonable access thereto to complete or correct items on the tentative list.

1.36 **Final Estimate and Payment.** As soon as practicable (but not more than sixty-five (65) days) after final completion of the Work, the City shall make a final estimate, in writing, of the quantity of work done under the Contract and the amount earned by the Contractor.

The City shall pay to the Contractor the entire amount found to be earned and due hereunder after deducting therefrom all previous payments, all charges against the Contractor as provided for hereunder, and all amounts to be retained under the provisions of the Contract. Except as in this sub-section otherwise provided such payment shall be made not later than fifteen (15) days after, but in no event before, the expiration of the time within which claims for labor performed or materials or equipment furnished must be filed under the applicable Lien Law, or, if such time is not specified by law, the expiration of thirty (30) days after the completion of the Engineer's final estimate. All quantities shown on progress estimates and all prior payments shall be subject to correction in the final estimate and payment.

1.37 **Liens.** If, at any time, any notices of lien are filed for labor performed or materials or equipment manufactured, furnished, or delivered to or for the Work, the Contractor shall, at its own cost and expense, promptly discharge, remove or otherwise dispose of the same, and until such discharge, removal or disposition, the City shall have the right to retain from any monies payable hereunder an amount which, in its sole judgment, it deems necessary to satisfy such liens and pay the costs and expenses, including attorneys' fees, of defending any actions brought to enforce the same, or incurred in connection therewith or by reason thereof.

1.38 **Claims.** If, at any time, there be any evidence of any claims for which the Contractor is or may be liable or responsible hereunder, the Contractor shall promptly settle or otherwise dispose of the same, and until such claims are settled or disposed of, the City may retain from any monies which would otherwise be payable hereunder so much thereof as, in its sole judgment, it may deem necessary to settle or otherwise dispose of such claims and to pay the costs and expenses, including attorneys' fees, of defending any actions brought to enforce such claims, or incurred in connection therewith or by reason thereof.

1.39 **No Waiver.** Neither the inspection by the City, nor any order, measurement, approval, determination, decision of certificate by the City for the payment of money; nor any payment for or use, occupancy, possession or acceptance of the whole or any part of the work by the City, nor any extension of time, nor any other act or omission of the City shall constitute or be deemed to be an acceptance of any defective or improper work, materials, or equipment nor operate as a waiver of any requirement or provision of the Contract, nor of any remedy, power or right of or herein reserved to the City, nor of any right to damages for breach of contract. Any and all rights and/or remedies provided for in the Contract are intended and shall be construed to be cumulative; and, in addition to each and every other right and remedy provided for herein or by law, the City shall be entitled as of right to a writ of injunction against any breach or threatened breach of the Contract by the Contractor, by his sub-contractors or by any other person or persons.

1.40 **Liability of Town.** No person, firm or corporation, other than the Contractor, who signed the Contract as such, shall have any interest herein or right hereunder. No claim shall be made or be valid either against the City or any agent of the City and neither the City nor any agent of the City shall be liable for or be held to pay any money, except as herein provided. The acceptance by the Contractor of the payment as fixed in the final estimate shall operate as and shall be a full and complete release of the City and of every agent of the City of and from any and all claims, demands, damages and liabilities of, by

or to the Contractor for anything done or furnished for or arising out of or relating to or by reason of the Work or for or on account of any act or neglect of the City or of any agent of the City or of any other person, arising out of, relating to or by reason of the Work, except the claim against the City for the unpaid balance, if any there be, of the amounts retained as herein provided.

1.41 **Guarantee.** The Contractor guarantees that the Work and services to be performed under the Contract, and all workmanship, materials and equipment performed, furnished, used or installed in the construction of the same, shall be free from defects and flaws, and shall be performed and furnished in strict accordance with the drawings, specifications, and other contract documents, that the strength of all parts of all manufactured equipment shall be adequate and as specified and that the performance test requirements of the Contract shall be fulfilled.

1.42 **Cleaning Up.** The Contractor, at all times, shall keep the site of the Work free from rubbish and debris caused by his operations under the Contract. When the Work has been completed, the Contractor shall remove from the site of the Work all of his plant, machinery, tools, construction equipment, temporary work and surplus materials so as to leave the Work and the site clean and ready for use.

1.43 **Legal Address of Contractor.** The Contractor's business address and his office at or near the site of the Work are both hereby designated as places to which communications in a postpaid wrapper directed to the Contractor's business address in a post office box regularly maintained by the Post Office Department or the delivery at either designated address of any letter, notice, or other communication by mail or otherwise shall be deemed sufficient service thereof upon the Contractor, and the date of such service shall be the date of receipt. The first named address may be changed at any time by an instrument, in writing, executed and acknowledged by the Contractor and delivered to the City. Service of any notice, letter or other communication upon the Contractor personally shall likewise be deemed sufficient service.

1.44 **Modification of Termination.** Except as otherwise expressly provided herein, the Contract may not be modified except in writing signed by the parties hereto.

MEASUREMENT AND PAYMENT

MEASUREMENT AND PAYMENT

General: The following subsections describe the measurement of and payment for the work to be done under items listed in the Bid.

Each unit or lump sum price stated in the Bid shall constitute full compensation as herein specified for each item of work completed in accordance with the drawings and specifications, including cleaning up.

Item 1 Site Preparation (Mobilization/De-mobilization) The total price bid for Site Preparation (Mobilization/Demobilization) shall not exceed five (5) percent of the total amount of the remaining bid items. The lump sum price for Item 1 shall constitute full compensation for preparing the site including (but not limited to): sawcutting of sidewalks, roadways, and driveways; removal and stockpiling of loam; removal and disposal of trees, brush, and stumps as required; disposal of surplus loam material as directed; protecting property pins, bounds and other documentation, fences, walls, and walks; and removing and resetting signs as required. The price shall also include protection of excavations left open, all safety and construction signage, obtaining all permits, cleanup and all other related work necessary, indicated by the plans, or as specified or directed.

Item 2 Uniformed Traffic Police Payment shall be made from the cash allowance noted under Item 2 in the bid form. The measurement and payment for uniformed traffic police will be on an hourly basis using the police invoices. The police department invoice shall include the officer's name, date, location, hours worked, and wage rate.

The Contractor is responsible for contacting the Police Department with regard to scheduling requirements.

Item 3 Removal and Disposal of Existing Concrete Sidewalks. The unit price for Item 3 shall constitute full compensation for the excavation and disposal of all existing sidewalks as directed and as specified, including all labor and equipment.

Under Item 3, the quantity of existing sidewalks removed and disposed shall be measured in square feet.

Item 4 Install 4" Concrete Sidewalk The unit price for Item 4 shall constitute full compensation for the preparation and construction of a 4-inch reinforced concrete sidewalk with premolded joint filler and sealer, wire, and dowels as directed and as specified, including all labor and equipment.

Under Item 4, the quantity of 4-inch concrete sidewalk installed will be measured in square feet. The amount of sidewalk paid for will equal the actual amount of 4-inch sidewalk installed.

Item 5 Install 6" Concrete Sidewalk & Curb Cut The unit price for Item 5 shall constitute full compensation for the preparation and construction of a 6-inch reinforced concrete sidewalk and curb cut with premolded joint filler and sealer, wire, and dowels as directed and as specified, including all labor and equipment. This work also includes removal of a section of granite curbing for widening of the existing curb cut.

Under Item 5, the quantity of 6-inch concrete sidewalk installed will be measured in square feet. The amount of sidewalk paid for will equal the actual amount of 6-inch sidewalk installed.

Item 6 Reconstruct Open Frame & Grate with New Frame & Solid Cover. The unit price for Item 6 shall constitute full compensation, including all material, labor, equipment, tools, and incidentals, for removal and disposal of the existing metal open frame and grate and the construction of a new metal frame and solid cover, according to the plans and specifications given, or as directed and specified.

Under Item 6, Reconstruct Open Frame & Grate with New Frame & Solid Cover, will not be measured but will be paid for at the Contract Bid Lump Sum Price.

Item 7 Reconstruct Frame & Hatch Doors with New Frame & Hatch Doors. The unit price for Item 7 shall constitute full compensation, including all material, labor, equipment, tools, and incidentals, for removal and disposal of the existing metal frame and hatch doors and the construction of a new frame and hatch doors, according to the plans and specifications given, or as directed and specified.

Under Item 7, Reconstruct Frame & Hatch Doors with New Frame & Hatch Doors, will not be measured but will be paid for at the Contract Bid Lump Sum Price.

TECHNICAL SPECIFICATIONS

TECHNICAL SPECIFICATIONS

Item 1
Site Preparation (Mobilization/De-mobilization)

1.1	General
1.2	Clearing
1.3	Grubbing
1.4	Disposal
1.5	Care of Loam
1.6	Work in Improved Property
1.7	Relocation of Trees, Shrubs, Hedges, and Fences
1.8	Work in Easements
1.9	Stone Walls and Fences
1.10	Fill
1.11	Clean-up
1.12	Construction Signs
1.13	Sawcutting

1.1 General. The Contractor shall furnish all labor, materials, tools and equipment necessary and shall do all work to prepare the site as indicated on the drawings and as herein specified.

Extreme care shall be taken by the Contractor and his employees not to damage trees, and the Contractor shall be responsible for all damage done.

1.2 Clearing. From areas to be cleared, the Contractor shall cut or otherwise remove all designated trees, saplings, brush, vines, and other vegetable matter such as snags, sawdust, bark, etc., and refuse.

1.3 Grubbing. The area to be grubbed shall be the same as that which is to be cleared. Grubbing shall consist of the complete removal of all tree stumps and all roots larger than 3 in. in diameter to a depth of 6 in. below the ground surface. Such depths shall be measured from the existing ground surface or the proposed finished grade, whichever is the lower.

1.4 Disposal. All material collected by the Contractor in the course of clearing and grubbing shall be hauled away for disposal off the site. Such disposal shall be carried on as promptly as possible after removal of material in the grubbing operations and shall not be left until the final period of cleaning up.

1.5 Care of Loam. Wherever work in easements is to be done, the Contractor shall first scrape all loam to one side so that it will not become mixed with the roadway or other excavation materials. After the construction work is completed, the loam shall be re-spread upon the land. No loam shall be taken away from the easements, and if the existing loam is of an insufficient amount, the Contractor at his own expense, shall furnish and spread loam to a minimum compacted thickness of 6 in.

1.6 Work in Improved Property. Trees, cultivated hedges, lawns, shrubs, and plants which might be damaged by the Contractor's operations shall be protected by suitable means or shall be

dug up and temporarily replanted and cared for. After the construction operations have been substantially completed, they shall be replanted in their original positions and cared for until growth is re-established. If trees, cultivated hedges, lawns, shrubs and plants are injured to such a degree as to affect their growth or diminish their beauty or usefulness, they shall be replaced at the Contractor's expense by items of kind and quality at least equal to the kind and quality existing at the start of the work.

In all work in improved property, the Contractor shall do such hand work as may be required to prevent damage to buildings or trees.

1.7 Relocation of Trees, Shrubs, Hedges, and Fences. Where trees, shrubs, hedges, and fences interfere with the work the trees, shrubs, and hedges will be replanted by the Contractor, as indicated on the plans, or directed by the Engineer. Said trees, shrubs, and hedges will be replanted on improved property. The Contractor shall be responsible for care of said plantings, and responsible for re-establishing growth. If the trees, shrubs, or hedges are injured to such a degree as to affect their growth or diminish their beauty or usefulness, they shall be replaced at the Contractor's expense (see Section 1.6).

In the instance of fences conflicting with the construction work these fences shall be relocated to private property by the Contractor as indicated on the plans, or directed by the Engineer.

Any trees, shrubs, or hedges requiring trimming over City land shall be done by the Contractor as indicated on the plans, or as directed by the Engineer.

1.8 Work in Easements. After the construction work is completed, all easements shall be loamed and seeded as specified under LOAMING and SEEDING.

1.9 Stone Walls and Fences. Wherever stone walls or fences need to be removed to provide access to the work or if stone walls or fences are damaged during the progress of the work they shall be restored or repaired to as good condition as existed prior to entry, or disposed of if directed by the Engineer.

1.10 Fill. The Contractor shall fill where needed, within the easement, to provide cover as indicated on the drawings.

1.11 Clean-up. During its progress the work and the adjacent areas affected thereby shall be kept cleaned up and all rubbish, surplus materials, and unneeded construction equipment shall be removed and all damage repaired so that the public and property owners will be inconvenienced as little as possible.

Where material or debris have washed or flowed into or been placed in existing water courses, ditches, gutters, drains, pipes, structures, work done under this contract or elsewhere during the course of the Contractor's operations, such material or debris shall be entirely removed and satisfactorily disposed of during the progress of the work, and the ditches, channels, drains, pipes, structures, and work, etc., shall upon completion of the work, be left in a clean and neat condition.

On or before the completion of the work, the Contractor shall, unless otherwise especially directed or permitted, in writing, tear down and remove all temporary buildings and structures

built by him; shall remove all temporary works, tools, and machinery or other construction equipment furnished by him; shall remove, acceptably disinfect, and cover all organic matter and material containing organic matter in, under, and around privies, houses and other buildings used by him; shall remove all rubbish from any grounds which he has occupied; and shall leave the roads and all parts of the premises and adjacent property affected by his operations in a neat and satisfactory condition.

The Contractor shall restore or replace, when and as directed, any public or private property damage by his work, equipment, or employees, to a condition at lease equal to that existing immediately prior to the beginning of operations. To this end, the Contractor shall do as required all necessary highway or driveway walk and landscaping work. Suitable materials, equipment, and methods shall be used for such restoration. The Contractor shall be responsible for replacing or resetting lost or damaged property pins and bounds, whether private or public, by a registered land surveyor.

1.12 Construction Signs. The Contractor shall supply, erect, and properly maintain all temporary advance warning construction signs in all areas to be affected by his operations. Signs shall be placed in locations shown on the plans or as specified and no work will begin until all such signs are in place and their locations approved by the Engineer.

All signs shall conform to the specifications set forth in the Manual on Uniform Traffic Control Devices, 1988 Edition, or to specifications shown in the detail section of the plans.

1.13 Sawcutting. Any sawcutting required for the sidewalk, roadways and driveways shall be performed by the Contractor as indicated on the plans, or as directed by the Engineer.

Item 3
Removal & Disposal of Existing Concrete Sidewalks

General. The Contractor shall excavate and dispose of all existing sidewalks within the limits of work, as indicated on the drawings and as directed by the Engineer. The existing sidewalk shall be broken up using pneumatic hammers or other approved means, and removed from the site and disposed of in a suitable manner. Care will be taken not to damage or destroy any existing utilities.

Items 4 & 5
Concrete Sidewalk Construction

General
Excavation to Subgrade
Forms
Adjusting Embedded Items
Placement, Finishing and Contraction Joints
Expansion Joints
Wheelchair Ramps
Joint Sealer
Curing
Welded Wire Fabric

Cure Time at Driveways
Access to Properties

General. The Contractor shall furnish all labor, materials, tools and equipment necessary to construct a reinforced concrete sidewalk as shown on the plans and herein specified. Concrete shall conform to the specifications set forth in the Section on CONCRETE WORK.

Excavation to Subgrade. If, upon inspection of the existing gravel base course, the Engineer decided that it is a suitable base, the Contractor shall grade the existing base course to provide for surface drainage. The pitch of the sidewalk shall meet the existing grade or a grade of ¼ inch per foot towards the street. If the existing base is inadequate, the Contractor shall excavate this material to the required depth and place a gravel base at a 6-inch depth under 4-inch sidewalks and 12-inch depth under 6-inch sidewalks at driveways and 9" of gravel under 6" sidewalks and handicap ramps, and pitch the sidewalk to achieve proper drainage to the street. Gravel shall be placed as specified in Item 4.

Forms. Side forms and transverse forms for sidewalks shall be clean, smooth, free from warp, of sufficient strength to resist springing out of shape, and of a depth to conform to the thickness of the proposed walk. The forms shall be well staked and thoroughly braced and set to the established lines. All forms shall be oiled before placing concrete. Forms shall not be removed for 12 hours after the concrete has been placed, or long if directed.

Adjusting Embedded Items. As necessary to meet the final finished grade as indicated on the drawings, all embedded items (including but not limited to manhole covers and frames, catch basin grates and frames, valve boxes and other construction castings) shall be properly adjusted to their new elevation.

If, in the opinion of the Engineer, the existing water service valve boxes are suitable for use, the valve boxes shall be adjusted to meet proposed grade. If the existing top section cannot be adjusted to meet proposed grade a new top section shall be provided.

Placement and Finishing. The concrete sidewalk slabs shall be placed in alternate slabs 30 feet in length except as otherwise ordered. The slabs for sidewalks shall be separated by transverse performed expansion joint fillers and sealer ½ inch thickness, as specified. Concrete placement shall comply with the requirements of the Section on CONCRETE WORK for mixing and placing concrete and as herein specified. Concrete shall not be placed until forms have been checked for line grade.

Unless otherwise specified, concrete shall be 4000 psi Section 901 Table 3A-A. Subbase shall be moistened as necessary to provide a uniform damp condition at the time of concrete placement.

Concrete shall be placed in a continuous operation using methods which prevent segregation of mix. If placement is interrupted for more than ¼ hour, the Contractor shall place a construction joint. Construction joints shall be placed at score lines only, using a standard metal key-way section form.

After striking off and consolidating the concrete, the contractor shall smooth the surface by screening and floating. The surface shall then be checked for trueness and troweled to remove irregularities.

After troweling, contraction joints shall be scored and edging done. When excess moisture or surface sheen has disappeared, the surface shall be broomed lightly at right angles to the curb or as directed.

Tooling of edges and contraction joints shall then be repeated to remove broom finish in these areas.

The surface of all concrete sidewalks shall be uniformly scored with contraction joints into block unit of areas not more than 36 square feet as directed. The depth of the scoring shall be 1 inch.

Expansion Joints. The premolded expansion joint filler and sealer shall be as indicated on the drawings or as herein specified.

The premolded joint filler shall be:

Preformed resilient, bituminous-type filler, conforming to ASTM D994-71.

The filler strips shall be the full depth of the indicated ½-inch thick joint.

The Contractor shall provide smooth #5 bar dowels at all expansion joints and install the dowels with expansion caps as detailed at intervals of 18 to 24 inches on center.

The Contractor shall drill holes 18” minimum on center for the sliding end of dowels, in existing abutting stone or masonry to prevent surface differential movement as indicated on the plans or as directed by the Engineer.

The Contractor shall provide premolded joint filler for joints abutting curbs, manholes, hydrants, telephone poles and other fixed objects, unless otherwise indicated or directed.

Expansion joints shall be provided at approximately 30 feet on centers at the nearest even multiple of the scoring interval.

The joint filler shall extend full width and full depth of joint and shall have a cap insert or other suitable device to maintain a full joint width and an open joint of not less than ½ inch or more than 1 inch for the joint sealer. The joint sealer shall be of the polyurethane type (conforming to A.S.T.M. C920 Class 25).

Wheelchair Ramps. Wheelchair ramps shall be built at all corners and crosswalks. Wheelchair ramps shall be built to the specifications set forth in the preceding sub-sections and the concrete shall meet the specifications set forth in the Section on CONCRETE WORK.

Joint Sealer. Joint sealant shall be a multi-component polyurethane type and shall comply with ASTM C920 Class 25. Joint sealants shall be installed according to the manufacturer’s recommendations.

Curing. All concrete work shall be kept continuously moist for a period of 120 hours immediately following initial or completion of surface finishing. The temperature of the concrete shall be maintained between 40 degrees F and 90 degrees F during the curing period.

A membrane curing compound shall be applied after finishing work is complete. Two coats shall be applied totaling one gallon per 150 square feet, at right angles, with an approved sprayer.

Welded Wire Fabric. Welded wire fabric shall be six by six inch cold drawn steel welded mesh. All wire shall be ten (10) gauge, unless otherwise noted. Wire fabric shall be embedded in the concrete 1" from the bottom of the slab.

Cure Time at Driveways. A curing time of at least five (5) days must elapse before a sidewalk is opened to heavy truck traffic. All other vehicles may pass over the sidewalk after two (2) days have elapsed. When high early concrete is used cure time may be reduced at the Engineer's discretion.

Access to Properties. Where access to properties is critical ramps shall be placed as directed by the Engineer.

Concrete Work

General
Cement
Admixtures
Water
Fine Aggregate
Coarse Aggregate
Samples of Aggregate
Classes of Concrete
Quality and Proportioning of Concrete
Determining Proportions
Consistency of Concrete
Measuring Materials
Mixing Concrete
Ready-Mixed Concrete
Forms
Embedded Work in Concrete
Placing Concrete
Curing and Protection
Finishing Concrete
Trimming and Repairs
Expansion Joints
Construction Joints
Weep Holes

General. The Contractor shall furnish all necessary materials and build all concrete masonry required under this contract and not otherwise provided for, as indicated on the drawings and as herein specified.

All concrete shall be site-mixed or ready-mixed as produced by a plant acceptable to the Engineer.

Cement. Cement shall be a single brand of approved, American-made Portland Cement conforming to the ASTM Standard Specifications for Portland Cement, Designation C150, for Type II cement, or, with written permission of the Engineer Type III (high-early strength) cement.

When used in the work, cement shall be free from lumps and partially or wholly set cement.

No cement shall be used without prior approval of the Engineer.

If required, the Contractor shall furnish sworn certificate of mill tests of cement, in triplicate, at least seven days before the cement will be used. The Owner reserves the right to make such independent tests as he may deem necessary at any time.

When high early strength concrete is required, it shall be obtained by using Type III or by adding 15% additional Type I or Type II.

Admixtures. The use of admixtures will not be permitted.

Water. For mixing concrete, the Contractor shall use clean water from an approved source.

Fine Aggregate. Fine aggregate shall be clean, sound, sharp, screened, and well-graded sand conforming to the ASTM Standard Specifications for Concrete Aggregates, Designation C33, and the additional requirement that the aggregate shall have not less than 15 percent more than 30 percent, by weight, passing No. 50 sieve.

No fine aggregate shall be used if it contains more than two percent of silt or which shows a color darker than Plate 2 when tested according to the ASTM Standard Method of Test for Organic Impurities in Sands for Concrete, Designation C-40.

The weight average loss when fine aggregate is subjected to five cycles of the soundness test using magnesium sulfate shall not exceed 10 percent.

Coarse Aggregate. Coarse aggregate shall be washed, hard, tough and durable screened gravel or crushed stone conforming to the ASTM Standard Specifications for Concrete Aggregates, Designation C33 and the additional requirements specified herein. Coarse aggregate shall have not more than five percent by weight of deleterious substances and soft fragments. Unless otherwise approved, aggregate shall be well graded and shall conform to the grading requirements for coarse aggregates for nominal size 1 inch to No. 4.

No coarse aggregate shall be used if it contains more than one percent of silt or which shows a color darker than Plate 1 when tested as above specified for fine aggregate.

The weighted average loss when coarse aggregate is subjected to five cycles of the soundness test using magnesium sulfate shall not exceed 14 percent.

Samples of Aggregate. As required, the Contractor shall submit clearly labeled samples of fine and coarse aggregates to the Engineer. No aggregates shall be delivered and used shall be equal to the approved samples in all respects.

Classes of Concrete. 4000 psi concrete shall be used for all concrete not otherwise specified or noted on the drawings.

Quality and Proportioning of Concrete. Materials for concrete shall be proportioned to produce a thoroughly workable, plastic mixture resulting in a dense watertight concrete. The concrete shall meet the limitations given in Table 3 A-A.

TABLE 3A-A
CLASSIFICATION OF CONCRETE MIXES

CLASS (28 Day Compressive Strength)	MAXIMUM Water Cement Ratio (By Weight)			MINIMUM CEMENT CONTENT (Lbs. Per Cubic Yard FOR COARSE AGGREGATE)				
	Non Air Ent.	Air Ent.		1 ½"		¾"		3/8"
2500 psi	0.65	0.54		425		470		520
3000 psi	0.58	0.46	C*	470		520		565
3500 psi	0.51	0.40	B*	520		565		610
4000 psi	0.48	0.38	A*	565	D*	610	E*	660
5000 psi	0.44	0.35	F*	660	DE*	705		760
Entrained Air	+1.0%			5.0%		6.0%		7.0%

*Alternate Designation (Former Department of Public Works Classification)

Concrete, which will be subjected to conditions of severe exposure, will be minimum class 4000 psi with air-entrained content of 7.0 + 1.0%, when so specified.

The use of an approved additive other than air-entrained additives shall not affect a change in the maximum water-cement ratio or the minimum cement content. The minimum cement content can be changed only with the prior written approval of the Engineer.

Determining Proportions. The proportions of cement, fine and coarse aggregate and water to be used to obtain the specified concrete shall be determined by trial at the site. Proportions may be varied as approved, and shall be varied as required, provided that, in no case, shall the resulting mix violate the limitations set forth above under the heading "Quality and Proportions of Concrete."

Consistence of Concrete. Concrete shall be of plastic consistency such that it can be work readily into all parts of the forms and around embedded work without segregation of constituent materials or collection of free water on the surface.

Measuring Materials. Cement, fine aggregate, coarse aggregate and water for concrete shall be measure separately and with accuracy. Particular care shall be taken that fractional bags of

cement are correctly measured. Aggregates shall be measured by weight or loose in approved boxes, with allowance as directed for bulking of sand. Water shall be measured by volume.

Mixing Concrete. Concrete shall be mixed in an approved batch mixer of suitable capacity except for small quantities, which, by permission, are hand mixed. The volume of the mixed batch shall not exceed the manufacturer's rated capacity of the mixer. Adequate facilities shall be provided for accurate measurement of water and the control of materials entering the drum. The mixer shall revolve at a uniform peripheral speed of above 200 rpm.

The minimum mixing time for each batch (from the time when all solid materials and water are first in the drum) shall be 1-½ minutes for mixers of 1 c.y. capacity or less; for mixers of larger capacity, the mixing time shall be increased 30 seconds for each additional half cubic yard or fraction thereof. The entire batch shall be discharged before the mixer is recharged.

If the concrete is mixed by hand, it shall be done on a suitable surface. The cement and aggregates shall be mixed dry until an even and uniform color has been attained throughout. The proper quantity of water shall then be added and the whole mass turned with square-edged shovels until it has become intimately mixed.

Ready-Mixed Concrete. The use of ready-mixed concrete will be permitted provided that the Engineer shall have the right to inspect the plant of the manufacturer and the proportioning and mixing of the concrete and shall be given every facility therefore, and that the materials and methods of proportioning, mixing and delivering are satisfactory and generally in accordance with the above specifications. The manufacturer shall furnish, from an Independent testing laboratory and through the Contractor, appropriate certificates of tests, materials, proportions mixing and strengths. Such certificates shall have an effective date not more than six months prior to the time when the concrete will be used and shall be furnished to the Engineer at least seven days before the time of use. No ready-mixed concrete shall be ordered before the Engineer has given his approval thereof.

The quantity of concrete to be mixed or delivered in any one batch shall not exceed the rated capacity of the mixer or agitator as stated on the nameplate for the type of mixing in use.

At the time of delivery of each load of concrete, the Engineer shall be given a slip stating the actual quantity of each ingredient in that load.

Attention is directed to the importance of dispatching trucks from the batching plant so that they shall arrive at the site of the work just before the concrete is required, thus avoiding excessive mixing of concrete while waiting or delays in placing successive layers of concrete in the forms. Concrete shall be discharged into forms within 1 ½ hours after water was first added to the mix, and shall be mixed at least five minutes after all water has been added.

Forms. Forms shall be constructed of sound lumber, plywood or metal and shall conform accurately to the dimensions, shapes and elevations indicated on the drawings. They shall be mortar-tight, rigid and unyielding during the placing and compacting of the concrete. The Contractor shall be entirely responsible for the adequacy. Forms for manhole inverts shall be smooth, carefully built to true size and shape and accurately set.

Suitable molding or bevels shall be placed so as to produce a ¾ inch chamber on all exposed projecting corners.

Form surfaces to be in contact with concrete shall be oiled, and if reused, shall first be cleaned, repaired and re-oiled.

Forms shall not be removed until the product of the elapsed number of days after placement and the average daily air temperature at the surface of the concrete equal 100 for walls and vertical surfaces and 500 for slabs.

Embedded Work in Concrete. All embedded work shall be accurately built into or encased in the masonry by the Contractor as directed and all necessary precautions shall be taken to prevent such work from being displaced or deformed.

Placing Concrete. No concrete shall be placed on frozen subgrade or in water. Forms and excavations shall be free from water and all dirt, debris and other foreign matter when concrete is placed.

If chutes are used for conveying concrete, they shall be of metal or shall be metal lined.

Concrete shall be deposited in suitable layers, one layer quickly following another until the placement has been completed. While being deposited, the concrete shall be thoroughly compacted by rodding and spading or by mechanical vibration. If mechanical vibration is used, the concrete consistency as measured by slump shall not exceed 3 inches. Vibration shall be done by experienced operators under close supervision and the duration shall be held at the minimum necessary to produce thorough compaction without segregation. Hand spading shall always be used adjacent to forms to produce a smooth, dense surface. The concrete shall be thoroughly and carefully rodded about embedded materials.

Curing and Protection. Water shall not be permitted to rise on concrete within 24 hours after it is placed, nor shall running water be allowed to flow over complete concrete within four days after it has been placed.

For at least seven days after having been placed, all concrete shall be so protected that the temperature at the surface will not fall below 50 degrees F. The methods of protecting the concrete shall be subject to approval.

Finishing Concrete. Manhole tables and all surfaces shaped without forms and over which liquids will flow shall be smoothly finished by means of a steel trowel without the use of additional cement of sprinkling with water. Troweling shall not be started until all water has disappeared from the surface. Over troweling shall be avoided.

Trimming and Repairs. It is expected that forms, concrete and workmanship shall be such that the quantity of trimming and repair work is kept to a minimum.

Defective concrete shall be cut normal to the surface until sound concrete is reached, but not less than one inch deep; the remaining concrete shall be thoroughly roughened and cleaned. Concrete around the cavity or the form-tie recess shall be thoroughly wetted and promptly painted with a 1/16-inch brush coat of neat cement mixed to the consistency of thick lead paint.

The hole shall then be filled with mortar mixed in the proportions of one part cement and 1 ½ parts sand, both being form the same sources as in the apparent concrete.

Expansion Joints. Performed expansion joints shall be ½" bituminous impregnated expansion joint filler, type conforming to ASTM D994, or approved equal place where shown on the plans. The joint filler material shall be placed according to the manufacturer's recommendations. The joint filler material shall be placed such that it's top surface is one inch below the top surface of the new concrete.

Joint sealant shall be a multi-component polyurethane type and shall comply with ASTM C920, Class 25. Joint sealants shall be installed according to the manufacturer's recommendations. The Contractor shall supply smooth #35 bar dowels at all expansion joints and install the dowels, with expansion caps, 18" on center. Dowels shall be a minimum of 14" long. Depth of the dowels not shown of the plans or specified shall be as directed by the Engineer.

Expansion joints for retaining walls shall be placed 90' on center maximum, intermediate construction joints shall be placed 30' on center maximum.

Construction Joints. All construction joints in retaining walls shall be provided with a keyway and a waterstop. Keyway shall be as indicated on the plans or as specified by the Engineer.

The waterstop material shall be a minimum of 5" wide and of type, size and configuration approved by the Engineer. All waterstop material shall be installed in accordance with manufacturer's instructions and special care shall be taken in jointing the material. Waterstop shall be a diaphragm type of multirib design thermo-plastic material unless otherwise specified.

Concrete in structures shall be placed in such a manner that all construction joints shall be exactly horizontal or vertical, as the case may be, and that they shall be straight and as inconspicuous as possible.

When construction joints are definitely shown on the plans, all concrete between consecutive joints shall be placed in a continuous operation.

In order to allow for shrinkage, concrete shall not be placed against the second side of the construction joints for at least 12 hours after that on the first side has been placed.

Weep Holes. Weep holes shall be provided through all structures as indicated on the plans and as directed. Ends of weep holes that are to be covered by filling material shall be protected by ¼" mesh galvanized wire screen 23 gauge and not less than one (1) cubic yard of crushed stone.

Pipe for weep holes shall be 4" PVC pipe SDR 35 or approved equal, and shall have a minimum pitch of 1/8" per foot.

APPENDIX A

MASSACHUSETTS WAGE RATES

THE COMMONWEALTH OF MASSACHUSETTS
EXECUTIVE OFFICE OF LABOR AND WORKFORCE DEVELOPMENT
DEPARTMENT OF LABOR STANDARDS

Prevailing Wage Rates

As determined by the Director under the provisions of the Massachusetts General Laws, Chapter 149, Sections 26 to 27H

CHARLES D. BAKER
Governor

KARYN E. POLITO
Lt. Governor

ROSALIN ACOSTA
Secretary

WILLIAM D MCKINNEY
Director

Awarding Authority: City of Greenfield

Contract Number: DPW 19-08 **City/Town:** GREENFIELD

Description of Work: Replacement of approximately 600 sq. ft. of concrete sidewalk with new concrete sidewalk to include the replacement of existing metal frames and hatches in the sidewalk.

Job Location: 11 Bank Row

Information about Prevailing Wage Schedules for Awarding Authorities and Contractors

- This wage schedule applies only to the specific project referenced at the top of this page and uniquely identified by the "Wage Request Number" on all pages of this schedule.
- An Awarding Authority must request an updated wage schedule from the Department of Labor Standards ("DLS") if it has not opened bids or selected a contractor within 90 days of the date of issuance of the wage schedule. For CM AT RISK projects (bid pursuant to G.L. c.149A), the earlier of: (a) the execution date of the GMP Amendment, or (b) the bid for the first construction scope of work must be within 90-days of the wage schedule issuance date.
- The wage schedule shall be incorporated in any advertisement or call for bids for the project as required by M.G.L. c. 149, § 27. The wage schedule shall be made a part of the contract awarded for the project. The wage schedule must be posted in a conspicuous place at the work site for the life of the project in accordance with M.G.L. c. 149 § 27. The wages listed on the wage schedule must be paid to employees performing construction work on the project whether they are employed by the prime contractor, a filed sub-bidder, or any sub-contractor.
- All apprentices working on the project are required to be registered with the Massachusetts Department of Labor Standards, Division of Apprentice Standards (DLS/DAS). Apprentice must keep his/her apprentice identification card on his/her person during all work hours on the project. An apprentice registered with DAS may be paid the lower apprentice wage rate at the applicable step as provided on the prevailing wage schedule. **Any apprentice not registered with DLS/DAS regardless of whether or not they are registered with any other federal, state, local, or private agency must be paid the journeyworker's rate for the trade.**
- The wage rates will remain in effect for the duration of the project, except in the case of multi-year public construction projects. For construction projects lasting longer than one year, awarding authorities must request an updated wage schedule. Awarding authorities are required to request these updates no later than two weeks before the anniversary of the date the contract was executed by the awarding authority and the general contractor. For multi-year CM AT RISK projects, awarding authority must request an annual update no later than two weeks before the anniversary date, determined as the earlier of: (a) the execution date of the GMP Amendment, or (b) the execution date of the first amendment to permit procurement of construction services. Contractors are required to obtain the wage schedules from awarding authorities, and to pay no less than these rates to covered workers. The annual update requirement is not applicable to 27F "rental of equipment" contracts.
- Every contractor or subcontractor which performs construction work on the project is required to submit weekly payroll reports and a Statement of Compliance directly to the awarding authority by mail or email and keep them on file for three years. Each weekly payroll report must contain: the employee's name, address, occupational classification, hours worked, and wages paid. Do not submit weekly payroll reports to DLS. A sample of a payroll reporting form may be obtained at http://www.mass.gov/dols/pw.
- Contractors with questions about the wage rates or classifications included on the wage schedule have an affirmative obligation to inquire with DLS at (617) 626-6953.
- Employees not receiving the prevailing wage rate set forth on the wage schedule may report the violation to the Fair Labor Division of the office of the Attorney General at (617) 727-3465.
- Failure of a contractor or subcontractor to pay the prevailing wage rates listed on the wage schedule to all employees who perform construction work on the project is a violation of the law and subjects the contractor or subcontractor to civil and

Classification	Effective Date	Base Wage	Health	Pension	Supplemental Unemployment	Total Rate
Construction						
(2 AXLE) DRIVER - EQUIPMENT *TEAMSTERS JOINT COUNCIL NO. 10 ZONE B*	12/01/2016	$32.15	$10.91	$10.89	$0.00	$53.95
(3 AXLE) DRIVER - EQUIPMENT *TEAMSTERS JOINT COUNCIL NO. 10 ZONE B*	12/01/2016	$32.22	$10.91	$10.89	$0.00	$54.02
(4 & 5 AXLE) DRIVER - EQUIPMENT *TEAMSTERS JOINT COUNCIL NO. 10 ZONE B*	12/01/2016	$32.34	$10.91	$10.89	$0.00	$54.14
ADS/SUBMERSIBLE PILOT *PILE DRIVER LOCAL 56 (ZONE 3)*	08/01/2018	$97.80	$9.90	$21.15	$0.00	$128.85
	08/01/2019	$102.78	$9.90	$21.15	$0.00	$133.83
For apprentice rates see "Apprentice- PILE DRIVER"						
AIR TRACK OPERATOR *LABORERS - ZONE 3 (BUILDING & SITE)*	06/04/2018	$31.75	$7.70	$13.29	$0.00	$52.74
	12/03/2018	$32.52	$7.70	$13.29	$0.00	$53.51
	06/03/2019	$33.33	$7.70	$13.29	$0.00	$54.32
	12/02/2019	$34.14	$7.70	$13.29	$0.00	$55.13
For apprentice rates see "Apprentice- LABORER"						
AIR TRACK OPERATOR (HEAVY & HIGHWAY) *LABORERS - ZONE 3 (HEAVY & HIGHWAY)*	06/01/2018	$31.75	$7.70	$11.28	$0.00	$50.73
	12/01/2018	$32.51	$7.70	$11.28	$0.00	$51.49
	06/01/2019	$33.30	$7.70	$11.28	$0.00	$52.28
	12/01/2019	$34.09	$7.70	$11.28	$0.00	$53.07
	06/01/2020	$34.90	$7.70	$11.28	$0.00	$53.88
	12/01/2020	$35.71	$7.70	$11.28	$0.00	$54.69
	06/01/2021	$36.55	$7.70	$11.28	$0.00	$55.53
	12/01/2021	$37.38	$7.70	$11.28	$0.00	$56.36
For apprentice rates see "Apprentice- LABORER (Heavy and Highway)						
ASBESTOS WORKER (PIPES & TANKS) *HEAT & FROST INSULATORS LOCAL 6 (SPRINGFIELD)*	06/01/2018	$33.21	$11.50	$6.60	$0.00	$51.31
	12/01/2018	$34.11	$11.50	$6.60	$0.00	$52.21
	06/01/2019	$35.01	$11.50	$6.60	$0.00	$53.11
	12/01/2019	$35.91	$11.50	$6.60	$0.00	$54.01
	06/01/2020	$36.81	$11.50	$6.60	$0.00	$54.91
	12/01/2020	$37.71	$11.50	$6.60	$0.00	$55.81
ASPHALT RAKER *LABORERS - ZONE 3 (BUILDING & SITE)*	06/04/2018	$31.25	$7.70	$13.29	$0.00	$52.24
	12/03/2018	$32.02	$7.70	$13.29	$0.00	$53.01
	06/03/2019	$32.83	$7.70	$13.29	$0.00	$53.82
	12/02/2019	$33.64	$7.70	$13.29	$0.00	$54.63
For apprentice rates see "Apprentice- LABORER"						
ASPHALT RAKER (HEAVY & HIGHWAY) *LABORERS - ZONE 3 (HEAVY & HIGHWAY)*	06/01/2018	$31.25	$7.70	$11.28	$0.00	$50.23
	12/01/2018	$32.01	$7.70	$11.28	$0.00	$50.99
	06/01/2019	$32.80	$7.70	$11.28	$0.00	$51.78
	12/01/2019	$33.59	$7.70	$11.28	$0.00	$52.57
	06/01/2020	$34.40	$7.70	$11.28	$0.00	$53.38
	12/01/2020	$35.21	$7.70	$11.28	$0.00	$54.19
	06/01/2021	$36.05	$7.70	$11.28	$0.00	$55.03
	12/01/2021	$36.88	$7.70	$11.28	$0.00	$55.86
For apprentice rates see "Apprentice- LABORER (Heavy and Highway)						

Classification	Effective Date	Base Wage	Health	Pension	Supplemental Unemployment	Total Rate
AUTOMATIC GRADER-EXCAVATOR (RECLAIMER) *OPERATING ENGINEERS LOCAL 98*	06/01/2018	$34.54	$11.19	$13.44	$0.00	$59.17
	12/01/2018	$35.14	$11.19	$13.71	$0.00	$60.04
	06/01/2019	$35.65	$11.19	$13.98	$0.00	$60.82
	12/01/2019	$36.25	$11.19	$14.25	$0.00	$61.69
For apprentice rates see "Apprentice- OPERATING ENGINEERS"						
BACKHOE/FRONT-END LOADER OPERATOR *OPERATING ENGINEERS LOCAL 98*	06/01/2018	$34.54	$11.19	$13.44	$0.00	$59.17
	12/01/2018	$35.14	$11.19	$13.71	$0.00	$60.04
	06/01/2019	$35.65	$11.19	$13.98	$0.00	$60.82
	12/01/2019	$36.25	$11.19	$14.25	$0.00	$61.69
For apprentice rates see "Apprentice- OPERATING ENGINEERS"						
BARCO-TYPE JUMPING TAMPER *LABORERS - ZONE 3 (BUILDING & SITE)*	06/04/2018	$31.25	$7.70	$13.29	$0.00	$52.24
	12/03/2018	$32.02	$7.70	$13.29	$0.00	$53.01
	06/03/2019	$32.83	$7.70	$13.29	$0.00	$53.82
	12/02/2019	$33.64	$7.70	$13.29	$0.00	$54.63
For apprentice rates see "Apprentice- LABORER"						
BATCH/CEMENT PLANT - ON SITE *OPERATING ENGINEERS LOCAL 98*	06/01/2018	$34.01	$11.19	$13.44	$0.00	$58.64
	12/01/2018	$34.61	$11.19	$13.71	$0.00	$59.51
	06/01/2019	$35.12	$11.19	$13.98	$0.00	$60.29
	12/01/2019	$35.72	$11.19	$14.25	$0.00	$61.16
For apprentice rates see "Apprentice- OPERATING ENGINEERS"						
BLOCK PAVER, RAMMER / CURB SETTER *LABORERS - ZONE 3 (BUILDING & SITE)*	06/04/2018	$31.75	$7.70	$13.29	$0.00	$52.74
	12/03/2018	$32.52	$7.70	$13.29	$0.00	$53.51
	06/03/2019	$33.33	$7.70	$13.29	$0.00	$54.32
	12/02/2019	$34.14	$7.70	$13.29	$0.00	$55.13
For apprentice rates see "Apprentice- LABORER"						
BLOCK PAVER, RAMMER / CURB SETTER (HEAVY & HIGHWAY) *LABORERS - ZONE 3 (HEAVY & HIGHWAY)*	06/01/2018	$31.75	$7.70	$11.28	$0.00	$50.73
	12/01/2018	$32.51	$7.70	$11.28	$0.00	$51.49
	06/01/2019	$33.30	$7.70	$11.28	$0.00	$52.28
	12/01/2019	$34.09	$7.70	$11.28	$0.00	$53.07
	06/01/2020	$34.90	$7.70	$11.28	$0.00	$53.88
	12/01/2020	$35.71	$7.70	$11.28	$0.00	$54.69
	06/01/2021	$36.55	$7.70	$11.28	$0.00	$55.53
	12/01/2021	$37.38	$7.70	$11.28	$0.00	$56.36
For apprentice rates see "Apprentice- LABORER (Heavy and Highway)						
BOILER MAKER *BOILERMAKERS LOCAL 29*	03/01/2018	$43.57	$7.07	$17.46	$0.00	$68.10
	01/01/2019	$44.71	$7.07	$17.72	$0.00	$69.50
	01/01/2020	$46.10	$7.07	$17.98	$0.00	$71.15

Classification	Effective Date	Base Wage	Health	Pension	Supplemental Unemployment	Total Rate

Apprentice - *BOILERMAKER - Local 29*

Effective Date - 03/01/2018

Step	percent	Apprentice Base Wage	Health	Pension	Supplemental Unemployment	Total Rate
1	65	$28.32	$7.07	$11.37	$0.00	$46.76
2	65	$28.32	$7.07	$11.37	$0.00	$46.76
3	70	$30.50	$7.07	$12.23	$0.00	$49.80
4	75	$32.68	$7.07	$13.11	$0.00	$52.86
5	80	$34.86	$7.07	$13.97	$0.00	$55.90
6	85	$37.03	$7.07	$14.86	$0.00	$58.96
7	90	$39.21	$7.07	$15.72	$0.00	$62.00
8	95	$41.39	$7.07	$16.61	$0.00	$65.07

Effective Date - 01/01/2019

Step	percent	Apprentice Base Wage	Health	Pension	Supplemental Unemployment	Total Rate
1	65	$29.06	$7.07	$11.52	$0.00	$47.65
2	65	$29.06	$7.07	$11.52	$0.00	$47.65
3	70	$31.30	$7.07	$12.40	$0.00	$50.77
4	75	$33.53	$7.07	$13.30	$0.00	$53.90
5	80	$35.77	$7.07	$14.18	$0.00	$57.02
6	85	$38.00	$7.07	$15.07	$0.00	$60.14
7	90	$40.24	$7.07	$15.95	$0.00	$63.26
8	95	$42.47	$7.07	$16.84	$0.00	$66.38

Notes:

Apprentice to Journeyworker Ratio:1:4

BRICK/STONE/ARTIFICIAL MASONRY (INCL. MASONRY WATERPROOFING) *BRICKLAYERS LOCAL 3 (SPRINGFIELD/PITTSFIELD)*	08/01/2018	$41.41	$10.75	$18.77	$0.00	$70.93
	02/01/2019	$41.96	$10.75	$18.77	$0.00	$71.48
	08/01/2019	$43.31	$10.75	$18.91	$0.00	$72.97
	02/01/2020	$43.86	$10.75	$18.91	$0.00	$73.52
	08/01/2020	$45.21	$10.75	$19.06	$0.00	$75.02
	02/01/2021	$45.76	$10.75	$19.06	$0.00	$75.57
	08/01/2021	$47.16	$10.75	$19.22	$0.00	$77.13
	02/01/2022	$47.69	$10.75	$19.22	$0.00	$77.66

Classification	Effective Date	Base Wage	Health	Pension	Supplemental Unemployment	Total Rate

Apprentice - *BRICK/PLASTER/CEMENT MASON - Local 3 Springfield/Pittsfield*

Effective Date - 08/01/2018

Step	percent	Apprentice Base Wage	Health	Pension	Supplemental Unemployment	Total Rate
1	50	$20.71	$10.75	$18.77	$0.00	$50.23
2	60	$24.85	$10.75	$18.77	$0.00	$54.37
3	70	$28.99	$10.75	$18.77	$0.00	$58.51
4	80	$33.13	$10.75	$18.77	$0.00	$62.65
5	90	$37.27	$10.75	$18.77	$0.00	$66.79

Effective Date - 02/01/2019

Step	percent	Apprentice Base Wage	Health	Pension	Supplemental Unemployment	Total Rate
1	50	$20.98	$10.75	$18.77	$0.00	$50.50
2	60	$25.18	$10.75	$18.77	$0.00	$54.70
3	70	$29.37	$10.75	$18.77	$0.00	$58.89
4	80	$33.57	$10.75	$18.77	$0.00	$63.09
5	90	$37.76	$10.75	$18.77	$0.00	$67.28

Notes:

Apprentice to Journeyworker Ratio:1:5

BULLDOZER/POWER SHOVEL/TREE SHREDDER /CLAM SHELL *OPERATING ENGINEERS LOCAL 98*	06/01/2018	$34.54	$11.19	$13.44	$0.00	$59.17
	12/01/2018	$35.14	$11.19	$13.71	$0.00	$60.04
	06/01/2019	$35.65	$11.19	$13.98	$0.00	$60.82
	12/01/2019	$36.25	$11.19	$14.25	$0.00	$61.69
For apprentice rates see "Apprentice- OPERATING ENGINEERS"						
CAISSON & UNDERPINNING BOTTOM MAN *LABORERS - FOUNDATION AND MARINE*	06/01/2018	$39.10	$7.70	$15.40	$0.00	$62.20
	12/01/2018	$40.05	$7.70	$15.40	$0.00	$63.15
	06/01/2019	$41.05	$7.70	$15.40	$0.00	$64.15
	12/01/2019	$42.05	$7.70	$15.40	$0.00	$65.15
	06/01/2020	$43.04	$7.70	$15.40	$0.00	$66.14
	12/01/2020	$44.02	$7.70	$15.40	$0.00	$67.12
	06/01/2021	$45.04	$7.70	$15.40	$0.00	$68.14
	12/01/2021	$46.05	$7.70	$15.40	$0.00	$69.15
For apprentice rates see "Apprentice- LABORER"						
CAISSON & UNDERPINNING LABORER *LABORERS - FOUNDATION AND MARINE*	06/01/2018	$37.95	$7.70	$15.40	$0.00	$61.05
	12/01/2018	$38.90	$7.70	$15.40	$0.00	$62.00
	06/01/2019	$39.90	$7.70	$15.40	$0.00	$63.00
	12/01/2019	$40.90	$7.70	$15.40	$0.00	$64.00
	06/01/2020	$41.89	$7.70	$15.40	$0.00	$64.99
	12/01/2020	$42.87	$7.70	$15.40	$0.00	$65.97
	06/01/2021	$43.89	$7.70	$15.40	$0.00	$66.99
	12/01/2021	$44.90	$7.70	$15.40	$0.00	$68.00
For apprentice rates see "Apprentice- LABORER"						

Classification	Effective Date	Base Wage	Health	Pension	Supplemental Unemployment	Total Rate
CAISSON & UNDERPINNING TOP MAN *LABORERS - FOUNDATION AND MARINE*	06/01/2018	$37.95	$7.70	$15.40	$0.00	$61.05
	12/01/2018	$38.90	$7.70	$15.40	$0.00	$62.00
	06/01/2019	$39.90	$7.70	$15.40	$0.00	$63.00
	12/01/2019	$40.90	$7.70	$15.40	$0.00	$64.00
	06/01/2020	$41.89	$7.70	$15.40	$0.00	$64.99
	12/01/2020	$42.87	$7.70	$15.40	$0.00	$65.97
	06/01/2021	$43.89	$7.70	$15.40	$0.00	$66.99
	12/01/2021	$44.90	$7.70	$15.40	$0.00	$68.00
For apprentice rates see "Apprentice- LABORER"						
CARBIDE CORE DRILL OPERATOR *LABORERS - ZONE 3 (BUILDING & SITE)*	06/04/2018	$31.25	$7.70	$13.29	$0.00	$52.24
	12/03/2018	$32.02	$7.70	$13.29	$0.00	$53.01
	06/03/2019	$32.83	$7.70	$13.29	$0.00	$53.82
	12/02/2019	$33.64	$7.70	$13.29	$0.00	$54.63
For apprentice rates see "Apprentice- LABORER"						
CARPENTER *CARPENTERS LOCAL 108 - HAMPDEN HAMPSHIRE FRANKLIN*	03/05/2018	$36.56	$8.26	$15.00	$0.00	$59.82
	09/05/2018	$37.60	$8.26	$15.00	$0.00	$60.86
	03/04/2019	$38.64	$8.26	$15.00	$0.00	$61.90

Apprentice - *CARPENTER - Local 108 Hampden Hampshire Franklin*

Effective Date - 03/05/2018

Step	percent	Apprentice Base Wage	Health	Pension	Supplemental Unemployment	Total Rate
1	50	$18.28	$8.26	$1.22	$0.00	$27.76
2	60	$21.94	$8.26	$1.22	$0.00	$31.42
3	70	$25.59	$8.26	$11.34	$0.00	$45.19
4	75	$27.42	$8.26	$11.34	$0.00	$47.02
5	80	$29.25	$8.26	$12.56	$0.00	$50.07
6	80	$29.25	$8.26	$12.56	$0.00	$50.07
7	90	$32.90	$8.26	$13.78	$0.00	$54.94
8	90	$32.90	$8.26	$13.78	$0.00	$54.94

Effective Date - 09/05/2018

Step	percent	Apprentice Base Wage	Health	Pension	Supplemental Unemployment	Total Rate
1	50	$18.80	$8.26	$1.22	$0.00	$28.28
2	60	$22.56	$8.26	$1.22	$0.00	$32.04
3	70	$26.32	$8.26	$11.34	$0.00	$45.92
4	75	$28.20	$8.26	$11.34	$0.00	$47.80
5	80	$30.08	$8.26	$12.56	$0.00	$50.90
6	80	$30.08	$8.26	$12.56	$0.00	$50.90
7	90	$33.84	$8.26	$13.78	$0.00	$55.88
8	90	$33.84	$8.26	$13.78	$0.00	$55.88

Notes:

% Indentured After 10/1/17; 45/45/55/55/70/70/80/80
Step 1&2 $25.93/ 3&4 $30.77/ 5&6 $46.41/ 7&8 $51.29

Apprentice to Journeyworker Ratio:1:5

Classification	Effective Date	Base Wage	Health	Pension	Supplemental Unemployment	Total Rate
CARPENTER WOOD FRAME *CARPENTERS LOCAL 108 - HAMPDEN HAMPSHIRE FRANKLIN*	04/01/2018	$22.33	$7.07	$7.86	$0.00	$37.26
	10/01/2018	$22.71	$7.07	$7.86	$0.00	$37.64
	04/01/2019	$23.10	$7.07	$7.86	$0.00	$38.03
	10/01/2019	$23.49	$7.07	$7.86	$0.00	$38.42

As of 9/1/09 Carpentry work on wood-frame WEATHERIZATION projects shall be paid the WOOD FRAME CARPENTER rate.

Apprentice - *CARPENTER (Wood Frame) - 108 Hampden Hampshire*

Effective Date - 04/01/2018

Step	percent	Apprentice Base Wage	Health	Pension	Supplemental Unemployment	Total Rate
1	60	$13.40	$7.07	$0.00	$0.00	$20.47
2	60	$13.40	$7.07	$0.00	$0.00	$20.47
3	65	$14.51	$7.07	$7.86	$0.00	$29.44
4	70	$15.63	$7.07	$7.86	$0.00	$30.56
5	75	$16.75	$7.07	$7.86	$0.00	$31.68
6	80	$17.86	$7.07	$7.86	$0.00	$32.79
7	85	$18.98	$7.07	$7.86	$0.00	$33.91
8	90	$20.10	$7.07	$7.86	$0.00	$35.03

Effective Date - 10/01/2018

Step	percent	Apprentice Base Wage	Health	Pension	Supplemental Unemployment	Total Rate
1	60	$13.63	$7.07	$0.00	$0.00	$20.70
2	60	$13.63	$7.07	$0.00	$0.00	$20.70
3	65	$14.76	$7.07	$7.86	$0.00	$29.69
4	70	$15.90	$7.07	$7.86	$0.00	$30.83
5	75	$17.03	$7.07	$7.86	$0.00	$31.96
6	80	$18.17	$7.07	$7.86	$0.00	$33.10
7	85	$19.30	$7.07	$7.86	$0.00	$34.23
8	90	$20.44	$7.07	$7.86	$0.00	$35.37

Notes:

% Indentured After 10/1/17; 45/45/55/55/70/70/80/80
Step 1&2 $17.12/ 3&4 $24.10/ 5&6 $30.56/ 7&8 $32.79

Apprentice to Journeyworker Ratio:1:5

CEMENT MASONRY/PLASTERING *BRICKLAYERS LOCAL 3 (SPRINGFIELD/PITTSFIELD)*	07/01/2018	$39.07	$12.37	$17.64	$0.30	$69.38
	01/01/2019	$40.54	$12.37	$17.64	$0.30	$70.85
	07/01/2019	$41.11	$12.37	$17.64	$0.30	$71.42
	01/01/2020	$42.59	$12.37	$17.64	$0.30	$72.90

Classification	Effective Date	Base Wage	Health	Pension	Supplemental Unemployment	Total Rate

Apprentice - *CEMENT MASONRY/PLASTERING - Springfield/Pittsfield*

Effective Date - 07/01/2018

Step	percent	Apprentice Base Wage	Health	Pension	Supplemental Unemployment	Total Rate
1	50	$19.54	$12.37	$15.41	$0.00	$47.32
2	60	$23.44	$12.37	$17.64	$0.30	$53.75
3	65	$25.40	$12.37	$17.64	$0.30	$55.71
4	70	$27.35	$12.37	$17.64	$0.30	$57.66
5	75	$29.30	$12.37	$17.64	$0.30	$59.61
6	80	$31.26	$12.37	$17.64	$0.30	$61.57
7	90	$35.16	$12.37	$17.64	$0.30	$65.47

Effective Date - 01/01/2019

Step	percent	Apprentice Base Wage	Health	Pension	Supplemental Unemployment	Total Rate
1	50	$20.27	$12.37	$15.41	$0.00	$48.05
2	60	$24.32	$12.37	$17.64	$0.30	$54.63
3	65	$26.35	$12.37	$17.64	$0.30	$56.66
4	70	$28.38	$12.37	$17.64	$0.30	$58.69
5	75	$30.41	$12.37	$17.64	$0.30	$60.72
6	80	$32.43	$12.37	$17.64	$0.30	$62.74
7	90	$36.49	$12.37	$17.64	$0.30	$66.80

Notes:

Steps 3,4 are 500 hrs. All other steps are 1,000 hrs.

Apprentice to Journeyworker Ratio:1:3

CHAIN SAW OPERATOR *LABORERS - ZONE 3 (BUILDING & SITE)*	06/04/2018	$31.25	$7.70	$13.29	$0.00	$52.24
	12/03/2018	$32.02	$7.70	$13.29	$0.00	$53.01
	06/03/2019	$32.83	$7.70	$13.29	$0.00	$53.82
	12/02/2019	$33.64	$7.70	$13.29	$0.00	$54.63
For apprentice rates see "Apprentice- LABORER"						
COMPRESSOR OPERATOR *OPERATING ENGINEERS LOCAL 98*	06/01/2018	$34.01	$11.19	$13.44	$0.00	$58.64
	12/01/2018	$34.61	$11.19	$13.71	$0.00	$59.51
	06/01/2019	$35.12	$11.19	$13.98	$0.00	$60.29
	12/01/2019	$35.72	$11.19	$14.25	$0.00	$61.16
For apprentice rates see "Apprentice- OPERATING ENGINEERS"						
CRANE OPERATOR *OPERATING ENGINEERS LOCAL 98*	06/01/2018	$38.04	$11.19	$13.44	$0.00	$62.67
	12/01/2018	$38.64	$11.19	$13.71	$0.00	$63.54
	06/01/2019	$39.15	$11.19	$13.98	$0.00	$64.32
	12/01/2019	$39.75	$11.19	$14.25	$0.00	$65.19
For apprentice rates see "Apprentice- OPERATING ENGINEERS"						

Classification	Effective Date	Base Wage	Health	Pension	Supplemental Unemployment	Total Rate
DELEADER (BRIDGE) *PAINTERS LOCAL 35 - ZONE 3*	07/01/2018	$50.01	$8.15	$20.15	$0.00	$78.31
	01/01/2019	$50.36	$8.15	$20.85	$0.00	$79.36
	07/01/2019	$51.46	$8.15	$20.85	$0.00	$80.46
	01/01/2020	$42.56	$8.15	$20.85	$0.00	$71.56
	07/01/2020	$53.66	$8.15	$20.85	$0.00	$82.66
	01/01/2021	$54.76	$8.15	$20.85	$0.00	$83.76

Apprentice - *PAINTER Local 35 - BRIDGES/TANKS*

Effective Date - 07/01/2018

Step	percent	Apprentice Base Wage	Health	Pension	Supplemental Unemployment	Total Rate
1	50	$25.01	$8.15	$0.00	$0.00	$33.16
2	55	$27.51	$8.15	$5.34	$0.00	$41.00
3	60	$30.01	$8.15	$5.82	$0.00	$43.98
4	65	$32.51	$8.15	$6.31	$0.00	$46.97
5	70	$35.01	$8.15	$17.24	$0.00	$60.40
6	75	$37.51	$8.15	$17.73	$0.00	$63.39
7	80	$40.01	$8.15	$18.21	$0.00	$66.37
8	90	$45.01	$8.15	$19.18	$0.00	$72.34

Effective Date - 01/01/2019

Step	percent	Apprentice Base Wage	Health	Pension	Supplemental Unemployment	Total Rate
1	50	$25.18	$8.15	$0.00	$0.00	$33.33
2	55	$27.70	$8.15	$5.64	$0.00	$41.49
3	60	$30.22	$8.15	$6.15	$0.00	$44.52
4	65	$32.73	$8.15	$6.66	$0.00	$47.54
5	70	$35.25	$8.15	$17.78	$0.00	$61.18
6	75	$37.77	$8.15	$18.29	$0.00	$64.21
7	80	$40.29	$8.15	$18.80	$0.00	$67.24
8	90	$45.32	$8.15	$19.83	$0.00	$73.30

Notes:

Steps are 750 hrs.

Apprentice to Journeyworker Ratio:1:1

DEMO: ADZEMAN *LABORERS - ZONE 3 (BUILDING & SITE)*	06/01/2018	$38.15	$7.70	$15.20	$0.00	$61.05
	12/01/2018	$39.10	$7.70	$15.20	$0.00	$62.00
	06/01/2019	$40.10	$7.70	$15.20	$0.00	$63.00
	12/01/2019	$41.10	$7.70	$15.20	$0.00	$64.00

For apprentice rates see "Apprentice- LABORER"

DEMO: BACKHOE/LOADER/HAMMER OPERATOR *LABORERS - ZONE 3 (BUILDING & SITE)*	06/01/2018	$39.15	$7.70	$15.20	$0.00	$62.05
	12/01/2018	$40.10	$7.70	$15.20	$0.00	$63.00
	06/01/2019	$41.10	$7.70	$15.20	$0.00	$64.00
	12/01/2019	$42.10	$7.70	$15.20	$0.00	$65.00

For apprentice rates see "Apprentice- LABORER"

Classification	Effective Date	Base Wage	Health	Pension	Supplemental Unemployment	Total Rate
DEMO: BURNERS *LABORERS - ZONE 3 (BUILDING & SITE)*	06/01/2018	$38.90	$7.70	$15.20	$0.00	$61.80
	12/01/2018	$39.85	$7.70	$15.20	$0.00	$62.75
	06/01/2019	$40.85	$7.70	$15.20	$0.00	$63.75
	12/01/2019	$41.85	$7.70	$15.20	$0.00	$64.75
For apprentice rates see "Apprentice- LABORER"						
DEMO: CONCRETE CUTTER/SAWYER *LABORERS - ZONE 3 (BUILDING & SITE)*	06/01/2018	$39.15	$7.70	$15.20	$0.00	$62.05
	12/01/2018	$40.10	$7.70	$15.20	$0.00	$63.00
	06/01/2019	$41.10	$7.70	$15.20	$0.00	$64.00
	12/01/2019	$42.10	$7.70	$15.20	$0.00	$65.00
For apprentice rates see "Apprentice- LABORER"						
DEMO: JACKHAMMER OPERATOR *LABORERS - ZONE 3 (BUILDING & SITE)*	06/01/2018	$38.90	$7.70	$15.20	$0.00	$61.80
	12/01/2018	$39.85	$7.70	$15.20	$0.00	$62.75
	06/01/2019	$40.85	$7.70	$15.20	$0.00	$63.75
	12/01/2019	$41.85	$7.70	$15.20	$0.00	$64.75
For apprentice rates see "Apprentice- LABORER"						
DEMO: WRECKING LABORER *LABORERS - ZONE 3 (BUILDING & SITE)*	06/01/2018	$38.15	$7.70	$15.20	$0.00	$61.05
	12/01/2018	$39.10	$7.70	$15.20	$0.00	$62.00
	06/01/2019	$40.10	$7.70	$15.20	$0.00	$63.00
	12/01/2019	$41.10	$7.70	$15.20	$0.00	$64.00
For apprentice rates see "Apprentice- LABORER"						
DIVER *PILE DRIVER LOCAL 56 (ZONE 3)*	08/01/2018	$65.20	$9.90	$21.15	$0.00	$96.25
	08/01/2019	$68.52	$9.90	$21.15	$0.00	$99.57
For apprentice rates see "Apprentice- PILE DRIVER"						
DIVER TENDER *PILE DRIVER LOCAL 56 (ZONE 3)*	08/01/2018	$46.57	$9.90	$21.15	$0.00	$77.62
	08/01/2019	$48.94	$9.90	$21.15	$0.00	$79.99
For apprentice rates see "Apprentice- PILE DRIVER"						
DIVER TENDER (EFFLUENT) *PILE DRIVER LOCAL 56 (ZONE 3)*	08/01/2018	$69.86	$9.90	$21.15	$0.00	$100.91
	08/01/2019	$73.41	$9.90	$21.15	$0.00	$104.46
For apprentice rates see "Apprentice- PILE DRIVER"						
DIVER/SLURRY (EFFLUENT) *PILE DRIVER LOCAL 56 (ZONE 3)*	08/01/2018	$97.80	$9.90	$21.15	$0.00	$128.85
	08/01/2019	$102.78	$9.90	$21.15	$0.00	$133.83
For apprentice rates see "Apprentice- PILE DRIVER"						
ELECTRICIAN (Including Core Drilling) *ELECTRICIANS LOCAL 7*	07/01/2018	$41.21	$10.25	$11.74	$0.00	$63.20
	12/30/2018	$41.91	$10.50	$12.06	$0.00	$64.47
	06/30/2019	$42.66	$10.75	$12.33	$0.00	$65.74
	12/29/2019	$43.41	$11.00	$12.60	$0.00	$67.01

Classification	Effective Date	Base Wage	Health	Pension	Supplemental Unemployment	Total Rate

Apprentice - *ELECTRICIAN - Local 7*

Effective Date - 07/01/2018

Step	percent	Apprentice Base Wage	Health	Pension	Supplemental Unemployment	Total Rate
1	40	$16.48	$5.55	$0.49	$0.00	$22.52
2	45	$18.54	$5.55	$0.56	$0.00	$24.65
3	50	$20.61	$10.25	$6.92	$0.00	$37.78
4	55	$22.67	$10.25	$6.98	$0.00	$39.90
5	65	$26.79	$10.25	$8.10	$0.00	$45.14
6	70	$28.85	$10.25	$9.17	$0.00	$48.27

Effective Date - 12/30/2018

Step	percent	Apprentice Base Wage	Health	Pension	Supplemental Unemployment	Total Rate
1	40	$16.76	$5.70	$0.50	$0.00	$22.96
2	45	$18.86	$5.70	$0.57	$0.00	$25.13
3	50	$20.96	$10.50	$6.93	$0.00	$38.39
4	55	$23.05	$10.50	$6.99	$0.00	$40.54
5	65	$27.24	$10.50	$8.12	$0.00	$45.86
6	70	$29.34	$10.50	$9.18	$0.00	$49.02

Notes:

Steps 1-2 are 1000 hrs; Steps 3-6 are 1500 hrs.

Apprentice to Journeyworker Ratio:2:3**

ELEVATOR CONSTRUCTOR *ELEVATOR CONSTRUCTORS LOCAL 41*	01/01/2018	$51.46	$15.43	$16.61	$0.00	$83.50
	01/01/2019	$53.11	$15.58	$17.51	$0.00	$86.20
	01/01/2020	$54.85	$15.73	$18.41	$0.00	$88.99
	01/01/2021	$56.69	$15.88	$19.31	$0.00	$91.88
	01/01/2022	$58.62	$16.03	$20.21	$0.00	$94.86

Classification	Effective Date	Base Wage	Health	Pension	Supplemental Unemployment	Total Rate

Apprentice - *ELEVATOR CONSTRUCTOR - Local 41*

Effective Date - 01/01/2018

Step	percent	Apprentice Base Wage	Health	Pension	Supplemental Unemployment	Total Rate
1	50	$25.73	$15.43	$0.00	$0.00	$41.16
2	55	$28.30	$15.43	$16.61	$0.00	$60.34
3	65	$33.45	$15.43	$16.61	$0.00	$65.49
4	70	$36.02	$15.43	$16.61	$0.00	$68.06
5	80	$41.17	$15.43	$16.61	$0.00	$73.21

Effective Date - 01/01/2019

Step	percent	Apprentice Base Wage	Health	Pension	Supplemental Unemployment	Total Rate
1	50	$26.56	$15.58	$0.00	$0.00	$42.14
2	55	$29.21	$15.58	$17.51	$0.00	$62.30
3	65	$34.52	$15.58	$17.51	$0.00	$67.61
4	70	$37.18	$15.58	$17.51	$0.00	$70.27
5	80	$42.49	$15.58	$17.51	$0.00	$75.58

Notes:

Steps 1-2 are 6 mos.; Steps 3-5 are 1 year

Apprentice to Journeyworker Ratio:1:1

ELEVATOR CONSTRUCTOR HELPER *ELEVATOR CONSTRUCTORS LOCAL 41*	01/01/2018	$36.02	$15.43	$16.61	$0.00	$68.06
	01/01/2019	$37.18	$15.58	$17.51	$0.00	$70.27
	01/01/2020	$38.40	$15.73	$18.41	$0.00	$72.54
	01/01/2021	$39.68	$15.88	$19.31	$0.00	$74.87
	01/01/2022	$41.03	$16.03	$20.21	$0.00	$77.27
For apprentice rates see "Apprentice - ELEVATOR CONSTRUCTOR"						
FENCE & GUARD RAIL ERECTOR (HEAVY & HIGHWAY) *LABORERS - ZONE 3 (HEAVY & HIGHWAY)*	06/01/2018	$31.25	$7.70	$11.28	$0.00	$50.23
	12/01/2018	$32.01	$7.70	$11.28	$0.00	$50.99
	06/01/2019	$32.80	$7.70	$11.28	$0.00	$51.78
	12/01/2019	$33.59	$7.70	$11.28	$0.00	$52.57
	06/01/2020	$34.40	$7.70	$11.28	$0.00	$53.38
	12/01/2020	$35.21	$7.70	$11.28	$0.00	$54.19
	06/01/2021	$36.05	$7.70	$11.28	$0.00	$55.03
	12/01/2021	$36.88	$7.70	$11.28	$0.00	$55.86
For apprentice rates see "Apprentice- LABORER (Heavy and Highway)						
FIELD ENG.INST/ROD-BLDG,SITE,HVY/HWY *OPERATING ENGINEERS LOCAL 98*	06/01/1999	$18.84	$4.80	$4.10	$0.00	$27.74
FIELD ENG.PARTY CHIEF:BLDG,SITE,HVY/HWY *OPERATING ENGINEERS LOCAL 98*	06/01/1999	$21.33	$4.80	$4.10	$0.00	$30.23
FIELD ENG.SURVEY CHIEF-BLDG,SITE,HVY/HWY *OPERATING ENGINEERS LOCAL 98*	06/01/1999	$22.33	$4.80	$4.10	$0.00	$31.23
FIRE ALARM INSTALLER *ELECTRICIANS LOCAL 7*	07/01/2018	$41.21	$10.25	$11.74	$0.00	$63.20
	12/30/2018	$41.91	$10.50	$12.06	$0.00	$64.47
	06/30/2019	$42.66	$10.75	$12.33	$0.00	$65.74
	12/29/2019	$43.41	$11.00	$12.60	$0.00	$67.01

Classification	Effective Date	Base Wage	Health	Pension	Supplemental Unemployment	Total Rate
For apprentice rates see "Apprentice- ELECTRICIAN"						
FIRE ALARM REPAIR / MAINTENANCE / COMMISSIONING *ELECTRICIANS LOCAL 7*	07/01/2018	$41.21	$10.25	$11.74	$0.00	$63.20
	12/30/2018	$41.91	$10.50	$12.06	$0.00	$64.47
	06/30/2019	$42.66	$10.75	$12.33	$0.00	$65.74
	12/29/2019	$43.41	$11.00	$12.60	$0.00	$67.01
For apprentice rates see "Apprentice- TELECOMMUNICATIONS TECHNICIAN"						
FIREMAN *OPERATING ENGINEERS LOCAL 98*	06/01/2018	$34.01	$11.19	$13.44	$0.00	$58.64
	12/01/2018	$34.61	$11.19	$13.71	$0.00	$59.51
	06/01/2019	$35.12	$11.19	$13.98	$0.00	$60.29
	12/01/2019	$35.72	$11.19	$14.25	$0.00	$61.16

Apprentice - *OPERATING ENGINEERS - Local 98 Class 3*

Effective Date - 06/01/2018

Step	percent	Apprentice Base Wage	Health	Pension	Supplemental Unemployment	Total Rate
1	60	$20.41	$11.19	$13.44	$0.00	$45.04
2	70	$23.81	$11.19	$13.44	$0.00	$48.44
3	80	$27.21	$11.19	$13.44	$0.00	$51.84
4	90	$30.61	$11.19	$13.44	$0.00	$55.24

Effective Date - 12/01/2018

Step	percent	Apprentice Base Wage	Health	Pension	Supplemental Unemployment	Total Rate
1	60	$20.77	$11.19	$13.71	$0.00	$45.67
2	70	$24.23	$11.19	$13.71	$0.00	$49.13
3	80	$27.69	$11.19	$13.71	$0.00	$52.59
4	90	$31.15	$11.19	$13.71	$0.00	$56.05

Notes:

Steps 1-2 are 1000 hrs.; Steps 3-4 are 2000 hrs.

Apprentice to Journeyworker Ratio:1:6

FLAGGER & SIGNALER (HEAVY & HIGHWAY) *LABORERS - ZONE 3 (HEAVY & HIGHWAY)*	06/01/2018	$21.50	$7.70	$11.28	$0.00	$40.48
	12/01/2018	$22.50	$7.70	$11.28	$0.00	$41.48
	06/01/2019	$22.50	$7.70	$11.28	$0.00	$41.48
	12/01/2019	$23.50	$7.70	$11.28	$0.00	$42.48
	06/01/2020	$23.50	$7.70	$11.28	$0.00	$42.48
	12/01/2020	$24.50	$7.70	$11.28	$0.00	$43.48
	06/01/2021	$24.50	$7.70	$11.28	$0.00	$43.48
	12/01/2021	$24.50	$7.70	$11.28	$0.00	$43.48
For apprentice rates see "Apprentice- LABORER (Heavy and Highway)"						
FLOORCOVERER *FLOORCOVERERS LOCAL 2168 ZONE III*	03/01/2016	$32.60	$8.55	$14.42	$0.00	$55.57

Classification	Effective Date	Base Wage	Health	Pension	Supplemental Unemployment	Total Rate

Apprentice - *FLOORCOVERER - Local 2168 Zone III*

Effective Date - 03/01/2016

Step	percent	Apprentice Base Wage	Health	Pension	Supplemental Unemployment	Total Rate
1	50	$16.30	$8.55	$1.20	$0.00	$26.05
2	55	$17.93	$8.55	$1.20	$0.00	$27.68
3	60	$19.56	$8.55	$10.82	$0.00	$38.93
4	65	$21.19	$8.55	$10.82	$0.00	$40.56
5	70	$22.82	$8.55	$12.02	$0.00	$43.39
6	75	$24.45	$8.55	$12.02	$0.00	$45.02
7	80	$26.08	$8.55	$13.22	$0.00	$47.85
8	85	$27.71	$8.55	$13.22	$0.00	$49.48

Notes: Steps are 750 hrs.
% After 09/1/17; 45/45/55/55/70/70/80/80 (1500hr Steps)
Step 1&2 $24.42/ 3&4 $28.84/ 5&6 $43.39/ 7&8 $47.85

Apprentice to Journeyworker Ratio:1:1

FORK LIFT *OPERATING ENGINEERS LOCAL 98*	06/01/2018	$34.23	$11.19	$13.44	$0.00	$58.86
	12/01/2018	$34.83	$11.19	$13.71	$0.00	$59.73
	06/01/2019	$35.34	$11.19	$13.98	$0.00	$60.51
	12/01/2019	$35.94	$11.19	$14.25	$0.00	$61.38
For apprentice rates see "Apprentice- OPERATING ENGINEERS"						
GENERATORS/LIGHTING PLANTS *OPERATING ENGINEERS LOCAL 98*	06/01/2018	$30.78	$11.19	$13.44	$0.00	$55.41
	12/01/2018	$31.38	$11.19	$13.71	$0.00	$56.28
	06/01/2019	$31.89	$11.19	$13.98	$0.00	$57.06
	12/01/2019	$32.49	$11.19	$14.25	$0.00	$57.93
For apprentice rates see "Apprentice- OPERATING ENGINEERS"						
GLAZIER (GLASS PLANK/AIR BARRIER/INTERIOR SYSTEMS) *GLAZIERS LOCAL 1333*	06/01/2018	$37.18	$10.40	$9.35	$0.00	$56.93
	06/01/2019	$38.18	$10.60	$9.90	$0.00	$58.68
	06/01/2020	$39.18	$10.80	$10.45	$0.00	$60.43

Classification	Effective Date	Base Wage	Health	Pension	Supplemental Unemployment	Total Rate

Apprentice - *GLAZIER - Local 1333*

Effective Date - 06/01/2018

Step	percent	Apprentice Base Wage	Health	Pension	Supplemental Unemployment	Total Rate
1	50	$18.59	$10.40	$1.60	$0.00	$30.59
2	56	$20.91	$10.40	$1.60	$0.00	$32.91
3	63	$23.24	$10.40	$2.10	$0.00	$35.74
4	69	$25.56	$10.40	$2.10	$0.00	$38.06
5	75	$27.89	$10.40	$2.60	$0.00	$40.89
6	81	$30.21	$10.40	$2.60	$0.00	$43.21
7	88	$32.53	$10.40	$9.35	$0.00	$52.28
8	94	$34.86	$10.40	$9.35	$0.00	$54.61

Effective Date - 06/01/2019

Step	percent	Apprentice Base Wage	Health	Pension	Supplemental Unemployment	Total Rate
1	50	$19.09	$10.60	$1.80	$0.00	$31.49
2	56	$21.48	$10.60	$1.80	$0.00	$33.88
3	63	$23.86	$10.60	$2.40	$0.00	$36.86
4	69	$26.25	$10.60	$2.40	$0.00	$39.25
5	75	$28.64	$10.60	$2.90	$0.00	$42.14
6	81	$31.02	$10.60	$2.90	$0.00	$44.52
7	88	$33.41	$10.60	$9.90	$0.00	$53.91
8	94	$35.79	$10.60	$9.90	$0.00	$56.29

Notes:

Apprentice to Journeyworker Ratio:1:3

GRADER/TRENCHING MACHINE/DERRICK *OPERATING ENGINEERS LOCAL 98*	06/01/2018	$34.54	$11.19	$13.44	$0.00	$59.17
	12/01/2018	$35.14	$11.19	$13.71	$0.00	$60.04
	06/01/2019	$35.65	$11.19	$13.98	$0.00	$60.82
	12/01/2019	$36.25	$11.19	$14.25	$0.00	$61.69
For apprentice rates see "Apprentice- OPERATING ENGINEERS"						
HVAC (DUCTWORK) *SHEETMETAL WORKERS LOCAL 63*	07/01/2018	$33.74	$10.64	$16.22	$1.77	$62.37
	01/01/2019	$34.74	$10.64	$16.22	$1.77	$63.37
	07/01/2019	$35.74	$10.64	$16.22	$1.77	$64.37
	01/01/2020	$36.99	$10.64	$16.22	$1.77	$65.62
For apprentice rates see "Apprentice- SHEET METAL WORKER"						
HVAC (ELECTRICAL CONTROLS) *ELECTRICIANS LOCAL 7*	07/01/2018	$41.21	$10.25	$11.74	$0.00	$63.20
	12/30/2018	$41.91	$10.50	$12.06	$0.00	$64.47
	06/30/2019	$42.66	$10.75	$12.33	$0.00	$65.74
	12/29/2019	$43.41	$11.00	$12.60	$0.00	$67.01
For apprentice rates see "Apprentice- ELECTRICIAN"						

Classification	Effective Date	Base Wage	Health	Pension	Supplemental Unemployment	Total Rate
HVAC (TESTING AND BALANCING - AIR) *SHEETMETAL WORKERS LOCAL 63*	07/01/2018	$33.74	$10.64	$16.22	$1.77	$62.37
	01/01/2019	$34.74	$10.64	$16.22	$1.77	$63.37
	07/01/2019	$35.74	$10.64	$16.22	$1.77	$64.37
	01/01/2020	$36.99	$10.64	$16.22	$1.77	$65.62
For apprentice rates see "Apprentice- SHEET METAL WORKER"						
HVAC (TESTING AND BALANCING -WATER) *PLUMBERS & PIPEFITTERS LOCAL 104*	03/17/2018	$39.51	$8.50	$15.80	$0.00	$63.81
	09/17/2018	$40.11	$8.50	$15.95	$0.00	$64.56
	03/17/2019	$40.86	$8.50	$15.95	$0.00	$65.31
For apprentice rates see "Apprentice- PIPEFITTER" or "PLUMBER/PIPEFITTER"						
HVAC MECHANIC *PLUMBERS & PIPEFITTERS LOCAL 104*	03/17/2018	$39.51	$8.50	$15.80	$0.00	$63.81
	09/17/2018	$40.11	$8.50	$15.95	$0.00	$64.56
	03/17/2019	$40.86	$8.50	$15.95	$0.00	$65.31
For apprentice rates see "Apprentice- PIPEFITTER" or "PLUMBER/PIPEFITTER"						
HYDRAULIC DRILLS (HEAVY & HIGHWAY) *LABORERS - ZONE 3 (HEAVY & HIGHWAY)*	06/01/2018	$31.75	$7.70	$11.28	$0.00	$50.73
	12/01/2018	$32.51	$7.70	$11.28	$0.00	$51.49
	06/01/2019	$33.30	$7.70	$11.28	$0.00	$52.28
	12/01/2019	$34.09	$7.70	$11.28	$0.00	$53.07
	06/01/2020	$34.90	$7.70	$11.28	$0.00	$53.88
	12/01/2020	$35.71	$7.70	$11.28	$0.00	$54.69
	06/01/2021	$36.55	$7.70	$11.28	$0.00	$55.53
	12/01/2021	$37.38	$7.70	$11.28	$0.00	$56.36
For apprentice rates see "Apprentice- LABORER (Heavy and Highway)"						
INSULATOR (PIPES & TANKS) *HEAT & FROST INSULATORS LOCAL 6 (SPRINGFIELD)*	09/01/2017	$37.67	$11.75	$14.20	$0.00	$63.62
	09/01/2018	$39.47	$11.75	$14.20	$0.00	$65.42
	09/01/2019	$41.47	$11.75	$14.20	$0.00	$67.42

Apprentice - *ASBESTOS INSULATOR (Pipes & Tanks) - Local 6 Springfield*

Effective Date - 09/01/2017

Step	percent	Apprentice Base Wage	Health	Pension	Supplemental Unemployment	Total Rate
1	50	$18.84	$11.75	$10.45	$0.00	$41.04
2	60	$22.60	$11.75	$11.20	$0.00	$45.55
3	70	$26.37	$11.75	$11.95	$0.00	$50.07
4	80	$30.14	$11.75	$12.70	$0.00	$54.59

Effective Date - 09/01/2018

Step	percent	Apprentice Base Wage	Health	Pension	Supplemental Unemployment	Total Rate
1	50	$19.74	$11.75	$10.45	$0.00	$41.94
2	60	$23.68	$11.75	$11.20	$0.00	$46.63
3	70	$27.63	$11.75	$11.95	$0.00	$51.33
4	80	$31.58	$11.75	$12.70	$0.00	$56.03

Notes:

Steps are 1 year

Apprentice to Journeyworker Ratio:1:4

IRONWORKER/WELDER *IRONWORKERS LOCAL 7 (SPRINGFIELD AREA)*	03/16/2017	$32.39	$7.80	$19.60	$0.00	$59.79

Classification	Effective Date	Base Wage	Health	Pension	Supplemental Unemployment	Total Rate

Apprentice - *IRONWORKER - Local 7 Springfield*

Effective Date - 03/16/2017

Step	percent	Apprentice Base Wage	Health	Pension	Supplemental Unemployment	Total Rate
1	60	$19.43	$7.80	$19.60	$0.00	$46.83
2	70	$22.67	$7.80	$19.60	$0.00	$50.07
3	75	$24.29	$7.80	$19.60	$0.00	$51.69
4	80	$25.91	$7.80	$19.60	$0.00	$53.31
5	85	$27.53	$7.80	$19.60	$0.00	$54.93
6	90	$29.15	$7.80	$19.60	$0.00	$56.55

Notes:

Structural 1:6; Ornamental 1:4

Apprentice to Journeyworker Ratio:

JACKHAMMER & PAVING BREAKER OPERATOR *LABORERS - ZONE 3 (BUILDING & SITE)*	06/04/2018	$31.25	$7.70	$13.29	$0.00	$52.24
	12/03/2018	$32.02	$7.70	$13.29	$0.00	$53.01
	06/03/2019	$32.83	$7.70	$13.29	$0.00	$53.82
	12/02/2019	$33.64	$7.70	$13.29	$0.00	$54.63
For apprentice rates see "Apprentice- LABORER"						
LABORER *LABORERS - ZONE 3 (BUILDING & SITE)*	06/04/2018	$31.00	$7.70	$13.29	$0.00	$51.99
	12/03/2018	$31.77	$7.70	$13.29	$0.00	$52.76
	06/03/2019	$32.58	$7.70	$13.29	$0.00	$53.57
	12/02/2019	$33.39	$7.70	$13.29	$0.00	$54.38

Apprentice - *LABORER - Zone 3 Building & Site*

Effective Date - 06/04/2018

Step	percent	Apprentice Base Wage	Health	Pension	Supplemental Unemployment	Total Rate
1	60	$18.60	$7.70	$13.29	$0.00	$39.59
2	70	$21.70	$7.70	$13.29	$0.00	$42.69
3	80	$24.80	$7.70	$13.29	$0.00	$45.79
4	90	$27.90	$7.70	$13.29	$0.00	$48.89

Effective Date - 12/03/2018

Step	percent	Apprentice Base Wage	Health	Pension	Supplemental Unemployment	Total Rate
1	60	$19.06	$7.70	$13.29	$0.00	$40.05
2	70	$22.24	$7.70	$13.29	$0.00	$43.23
3	80	$25.42	$7.70	$13.29	$0.00	$46.41
4	90	$28.59	$7.70	$13.29	$0.00	$49.58

Notes:

Apprentice to Journeyworker Ratio:1:5

Classification	Effective Date	Base Wage	Health	Pension	Supplemental Unemployment	Total Rate
LABORER (HEAVY & HIGHWAY) *LABORERS - ZONE 3 (HEAVY & HIGHWAY)*	06/01/2018	$31.00	$7.70	$11.28	$0.00	$49.98
	12/01/2018	$31.76	$7.70	$11.28	$0.00	$50.74
	06/01/2019	$32.55	$7.70	$11.28	$0.00	$51.53
	12/01/2019	$33.34	$7.70	$11.28	$0.00	$52.32
	06/01/2020	$34.15	$7.70	$11.28	$0.00	$53.13
	12/01/2020	$34.96	$7.70	$11.28	$0.00	$53.94
	06/01/2021	$35.80	$7.70	$11.28	$0.00	$54.78
	12/01/2021	$36.63	$7.70	$11.28	$0.00	$55.61

Apprentice - *LABORER (Heavy & Highway) - Zone 3*

Effective Date - 06/01/2018

Step	percent	Apprentice Base Wage	Health	Pension	Supplemental Unemployment	Total Rate
1	60	$18.60	$7.70	$11.28	$0.00	$37.58
2	70	$21.70	$7.70	$11.28	$0.00	$40.68
3	80	$24.80	$7.70	$11.28	$0.00	$43.78
4	90	$27.90	$7.70	$11.28	$0.00	$46.88

Effective Date - 12/01/2018

Step	percent	Apprentice Base Wage	Health	Pension	Supplemental Unemployment	Total Rate
1	60	$19.06	$7.70	$11.28	$0.00	$38.04
2	70	$22.23	$7.70	$11.28	$0.00	$41.21
3	80	$25.41	$7.70	$11.28	$0.00	$44.39
4	90	$28.58	$7.70	$11.28	$0.00	$47.56

Notes:

Apprentice to Journeyworker Ratio:1:5

LABORER: CARPENTER TENDER *LABORERS - ZONE 3 (BUILDING & SITE)*	06/04/2018	$31.00	$7.70	$13.29	$0.00	$51.99
	12/03/2018	$31.77	$7.70	$13.29	$0.00	$52.76
	06/03/2019	$32.58	$7.70	$13.29	$0.00	$53.57
	12/02/2019	$33.39	$7.70	$13.29	$0.00	$54.38

For apprentice rates see "Apprentice- LABORER"

LABORER: CEMENT FINISHER TENDER *LABORERS - ZONE 3 (BUILDING & SITE)*	06/04/2018	$31.25	$7.70	$13.29	$0.00	$52.24
	12/03/2018	$32.02	$7.70	$13.29	$0.00	$53.01
	06/03/2019	$32.83	$7.70	$13.29	$0.00	$53.82
	12/02/2019	$33.64	$7.70	$13.29	$0.00	$54.63

For apprentice rates see "Apprentice- LABORER"

LABORER: HAZARDOUS WASTE/ASBESTOS REMOVER *LABORERS - ZONE 3 (BUILDING & SITE)*	06/01/2018	$31.10	$7.70	$13.29	$0.00	$52.09
	12/01/2018	$31.87	$7.70	$13.29	$0.00	$52.86
	06/01/2019	$32.68	$7.70	$13.29	$0.00	$53.67
	12/01/2019	$33.49	$7.70	$13.29	$0.00	$54.48

For apprentice rates see "Apprentice- LABORER"

Classification	Effective Date	Base Wage	Health	Pension	Supplemental Unemployment	Total Rate
LABORER: MASON TENDER *LABORERS - ZONE 3 (BUILDING & SITE)*	06/04/2018	$32.00	$7.70	$13.29	$0.00	$52.99
	12/03/2018	$32.77	$7.70	$13.29	$0.00	$53.76
	06/03/2019	$33.58	$7.70	$13.29	$0.00	$54.57
	12/02/2019	$34.39	$7.70	$13.29	$0.00	$55.38
For apprentice rates see "Apprentice- LABORER"						
LABORER: MASON TENDER (HEAVY & HIGHWAY) *LABORERS - ZONE 3 (HEAVY & HIGHWAY)*	06/01/2018	$31.25	$7.70	$11.28	$0.00	$50.23
	12/01/2018	$32.01	$7.70	$11.28	$0.00	$50.99
	06/01/2019	$32.80	$7.70	$11.28	$0.00	$51.78
	12/01/2019	$33.59	$7.70	$11.28	$0.00	$52.57
	06/01/2020	$34.40	$7.70	$11.28	$0.00	$53.38
	12/01/2020	$35.21	$7.70	$11.28	$0.00	$54.19
	06/01/2021	$36.05	$7.70	$11.28	$0.00	$55.03
	12/01/2021	$36.88	$7.70	$11.28	$0.00	$55.86
For apprentice rates see "Apprentice- LABORER (Heavy and Highway)						
LABORER: MULTI-TRADE TENDER *LABORERS - ZONE 3 (BUILDING & SITE)*	06/04/2018	$31.00	$7.70	$13.29	$0.00	$51.99
	12/03/2018	$31.77	$7.70	$13.29	$0.00	$52.76
	06/03/2019	$32.58	$7.70	$13.29	$0.00	$53.57
	12/02/2019	$33.39	$7.70	$13.29	$0.00	$54.38
For apprentice rates see "Apprentice- LABORER"						
LABORER: TREE REMOVER *LABORERS - ZONE 3 (BUILDING & SITE)*	06/04/2018	$31.00	$7.70	$13.29	$0.00	$51.99
	12/03/2018	$31.77	$7.70	$13.29	$0.00	$52.76
	06/03/2019	$32.58	$7.70	$13.29	$0.00	$53.57
	12/02/2019	$33.39	$7.70	$13.29	$0.00	$54.38
This classification applies to all tree work associated with the removal of standing trees, and trimming and removal of branches and limbs when the work is not done for a utility company for the purpose of operation, maintenance or repair of utility company equipment. For apprentice rates see "Apprentice- LABORER"						
LASER BEAM OPERATOR *LABORERS - ZONE 3 (BUILDING & SITE)*	06/04/2018	$31.25	$7.70	$13.29	$0.00	$52.24
	12/03/2018	$32.02	$7.70	$13.29	$0.00	$53.01
	06/03/2019	$32.83	$7.70	$13.29	$0.00	$53.82
	12/02/2019	$33.64	$7.70	$13.29	$0.00	$54.63
For apprentice rates see "Apprentice- LABORER"						
LASER BEAM OPERATOR (HEAVY & HIGHWAY) *LABORERS - ZONE 3 (HEAVY & HIGHWAY)*	06/01/2018	$31.25	$7.70	$11.28	$0.00	$50.23
	12/01/2018	$32.01	$7.70	$11.28	$0.00	$50.99
	06/01/2019	$32.80	$7.70	$11.28	$0.00	$51.78
	12/01/2019	$33.59	$7.70	$11.28	$0.00	$52.57
	06/01/2020	$34.40	$7.70	$11.28	$0.00	$53.38
	12/01/2020	$35.21	$7.70	$11.28	$0.00	$54.19
	06/01/2021	$36.05	$7.70	$11.28	$0.00	$55.03
	12/01/2021	$36.88	$7.70	$11.28	$0.00	$55.86
For apprentice rates see "Apprentice- LABORER (Heavy and Highway)						
MARBLE & TILE FINISHERS *BRICKLAYERS LOCAL 3 (SPR/PITT) - MARBLE & TILE*	08/01/2018	$34.17	$10.75	$18.26	$0.00	$63.18
	02/01/2019	$34.67	$10.75	$18.26	$0.00	$63.68
	08/01/2019	$35.67	$10.75	$18.37	$0.00	$64.79
	02/01/2020	$36.17	$10.75	$18.37	$0.00	$65.29
	08/01/2020	$37.17	$10.75	$18.49	$0.00	$66.41
	02/01/2021	$37.67	$10.75	$18.49	$0.00	$66.91
	08/01/2021	$38.67	$10.75	$18.62	$0.00	$68.04
	02/01/2022	$39.12	$10.75	$18.62	$0.00	$68.49

Classification	Effective Date	Base Wage	Health	Pension	Supplemental Unemployment	Total Rate

Apprentice - *MARBLE-TILE FINISHER-Local 3 Marble/Tile (Spr/Pitt)*

Effective Date - 08/01/2018

Step	percent	Apprentice Base Wage	Health	Pension	Supplemental Unemployment	Total Rate
1	50	$17.09	$10.75	$18.26	$0.00	$46.10
2	60	$20.50	$10.75	$18.26	$0.00	$49.51
3	70	$23.92	$10.75	$18.26	$0.00	$52.93
4	80	$27.34	$10.75	$18.26	$0.00	$56.35
5	90	$30.75	$10.75	$18.26	$0.00	$59.76

Effective Date - 02/01/2019

Step	percent	Apprentice Base Wage	Health	Pension	Supplemental Unemployment	Total Rate
1	50	$17.34	$10.75	$18.26	$0.00	$46.35
2	60	$20.80	$10.75	$18.26	$0.00	$49.81
3	70	$24.27	$10.75	$18.26	$0.00	$53.28
4	80	$27.74	$10.75	$18.26	$0.00	$56.75
5	90	$31.20	$10.75	$18.26	$0.00	$60.21

Notes:

Apprentice to Journeyworker Ratio:1:5

MARBLE MASON/TILE LAYER(SP/PT)SeeBrick
BRICKLAYERS LOCAL 3 (SPR/PITT) - MARBLE & TILE

See "BRICK/STONE/ARTIFICIAL MASONRY(INCL.MASONRY WATERPROOFING)

MECH. SWEEPER OPERATOR (ON CONST. SITES) *OPERATING ENGINEERS LOCAL 98*	06/01/2018	$34.54	$11.19	$13.44	$0.00	$59.17
	12/01/2018	$35.14	$11.19	$13.71	$0.00	$60.04
	06/01/2019	$35.65	$11.19	$13.98	$0.00	$60.82
	12/01/2019	$36.25	$11.19	$14.25	$0.00	$61.69

For apprentice rates see "Apprentice- OPERATING ENGINEERS"

MECHANIC/WELDER/BOOM TRUCK *OPERATING ENGINEERS LOCAL 98*	06/01/2018	$34.01	$11.19	$13.44	$0.00	$58.64
	12/01/2018	$34.61	$11.19	$13.71	$0.00	$59.51
	06/01/2019	$35.12	$11.19	$13.98	$0.00	$60.29
	12/01/2019	$35.72	$11.19	$14.25	$0.00	$61.16

For apprentice rates see "Apprentice- OPERATING ENGINEERS"

MILLWRIGHT (Zone 3) *MILLWRIGHTS LOCAL 1121 - Zone 3*	04/01/2018	$35.46	$9.90	$18.50	$0.00	$63.86
	10/01/2018	$36.29	$9.90	$18.50	$0.00	$64.69
	04/01/2019	$37.11	$9.90	$18.50	$0.00	$65.51

Classification	Effective Date	Base Wage	Health	Pension	Supplemental Unemployment	Total Rate

Apprentice - *MILLWRIGHT - Local 1121 Zone 3*

Effective Date - 04/01/2018

Step	percent	Apprentice Base Wage	Health	Pension	Supplemental Unemployment	Total Rate
1	55	$19.50	$9.90	$5.31	$0.00	$34.71
2	65	$23.05	$9.90	$15.13	$0.00	$48.08
3	75	$26.60	$9.90	$16.10	$0.00	$52.60
4	85	$30.14	$9.90	$17.06	$0.00	$57.10

Notes:

Steps are 2,000 hours

Apprentice to Journeyworker Ratio:1:5

MORTAR MIXER *LABORERS - ZONE 3 (BUILDING & SITE)*	06/04/2018	$31.25	$7.70	$13.29	$0.00	$52.24
	12/03/2018	$32.02	$7.70	$13.29	$0.00	$53.01
	06/03/2019	$32.83	$7.70	$13.29	$0.00	$53.82
	12/02/2019	$33.64	$7.70	$13.29	$0.00	$54.63
For apprentice rates see "Apprentice- LABORER"						
OILER *OPERATING ENGINEERS LOCAL 98*	06/01/2018	$29.70	$11.19	$13.44	$0.00	$54.33
	12/01/2018	$30.30	$11.19	$13.71	$0.00	$55.20
	06/01/2019	$30.81	$11.19	$13.98	$0.00	$55.98
	12/01/2019	$31.41	$11.19	$14.25	$0.00	$56.85
For apprentice rates see "Apprentice- OPERATING ENGINEERS"						
OTHER POWER DRIVEN EQUIPMENT - CLASS VI *OPERATING ENGINEERS LOCAL 98*	06/01/2018	$27.72	$11.19	$13.44	$0.00	$52.35
	12/01/2018	$28.32	$11.19	$13.71	$0.00	$53.22
	06/01/2019	$28.83	$11.19	$13.98	$0.00	$54.00
	12/01/2019	$29.43	$11.19	$14.25	$0.00	$54.87
For apprentice rates see "Apprentice- OPERATING ENGINEERS"						
PAINTER (BRIDGES/TANKS) *PAINTERS LOCAL 35 - ZONE 3*	07/01/2018	$50.01	$8.15	$20.15	$0.00	$78.31
	01/01/2019	$50.36	$8.15	$20.85	$0.00	$79.36
	07/01/2019	$51.46	$8.15	$20.85	$0.00	$80.46
	01/01/2020	$52.56	$8.15	$20.85	$0.00	$81.56
	07/01/2020	$53.66	$8.15	$20.85	$0.00	$82.66
	01/01/2021	$54.76	$8.15	$20.85	$0.00	$83.76

Classification	Effective Date	Base Wage	Health	Pension	Supplemental Unemployment	Total Rate

Apprentice - *PAINTER Local 35 - BRIDGES/TANKS*

Effective Date - 07/01/2018

Step	percent	Apprentice Base Wage	Health	Pension	Supplemental Unemployment	Total Rate
1	50	$25.01	$8.15	$0.00	$0.00	$33.16
2	55	$27.51	$8.15	$5.34	$0.00	$41.00
3	60	$30.01	$8.15	$5.82	$0.00	$43.98
4	65	$32.51	$8.15	$6.31	$0.00	$46.97
5	70	$35.01	$8.15	$17.24	$0.00	$60.40
6	75	$37.51	$8.15	$17.73	$0.00	$63.39
7	80	$40.01	$8.15	$18.21	$0.00	$66.37
8	90	$45.01	$8.15	$19.18	$0.00	$72.34

Effective Date - 01/01/2019

Step	percent	Apprentice Base Wage	Health	Pension	Supplemental Unemployment	Total Rate
1	50	$25.18	$8.15	$0.00	$0.00	$33.33
2	55	$27.70	$8.15	$5.64	$0.00	$41.49
3	60	$30.22	$8.15	$6.15	$0.00	$44.52
4	65	$32.73	$8.15	$6.66	$0.00	$47.54
5	70	$35.25	$8.15	$17.78	$0.00	$61.18
6	75	$37.77	$8.15	$18.29	$0.00	$64.21
7	80	$40.29	$8.15	$18.80	$0.00	$67.24
8	90	$45.32	$8.15	$19.83	$0.00	$73.30

Notes:

Steps are 750 hrs.

Apprentice to Journeyworker Ratio:1:1

PAINTER (SPRAY OR SANDBLAST, NEW) *	07/01/2018	$33.38	$8.15	$16.25	$0.00	$57.78
* If 30% or more of surfaces to be painted are new construction, NEW paint rate shall be used.*PAINTERS LOCAL 35 - ZONE 3*	01/01/2019	$33.73	$8.15	$16.95	$0.00	$58.83
	07/01/2019	$34.83	$8.15	$16.95	$0.00	$59.93
	01/01/2020	$35.93	$8.15	$16.95	$0.00	$61.03
	07/01/2020	$37.03	$8.15	$16.95	$0.00	$62.13
	01/01/2021	$38.13	$8.15	$16.95	$0.00	$63.23

Classification	Effective Date	Base Wage	Health	Pension	Supplemental Unemployment	Total Rate

Apprentice - *PAINTER Local 35 Zone 3 - Spray/Sandblast - New*

Effective Date - 07/01/2018

Step	percent	Apprentice Base Wage	Health	Pension	Supplemental Unemployment	Total Rate
1	50	$16.69	$8.15	$0.00	$0.00	$24.84
2	55	$18.36	$8.15	$3.19	$0.00	$29.70
3	60	$20.03	$8.15	$3.48	$0.00	$31.66
4	65	$21.70	$8.15	$3.77	$0.00	$33.62
5	70	$23.37	$8.15	$14.51	$0.00	$46.03
6	75	$25.04	$8.15	$14.80	$0.00	$47.99
7	80	$26.70	$8.15	$15.09	$0.00	$49.94
8	90	$30.04	$8.15	$15.67	$0.00	$53.86

Effective Date - 01/01/2019

Step	percent	Apprentice Base Wage	Health	Pension	Supplemental Unemployment	Total Rate
1	50	$16.87	$8.15	$0.00	$0.00	$25.02
2	55	$18.55	$8.15	$3.49	$0.00	$30.19
3	60	$20.24	$8.15	$3.81	$0.00	$32.20
4	65	$21.92	$8.15	$4.13	$0.00	$34.20
5	70	$23.61	$8.15	$15.05	$0.00	$46.81
6	75	$25.30	$8.15	$15.36	$0.00	$48.81
7	80	$26.98	$8.15	$15.68	$0.00	$50.81
8	90	$30.36	$8.15	$16.32	$0.00	$54.83

Notes:

Steps are 750 hrs.

Apprentice to Journeyworker Ratio:1:1

PAINTER (SPRAY OR SANDBLAST, REPAINT) *PAINTERS LOCAL 35 - ZONE 3*	07/01/2018	$30.70	$8.15	$16.25	$0.00	$55.10
	01/01/2019	$31.05	$8.15	$16.95	$0.00	$56.15
	07/01/2019	$32.15	$8.15	$16.95	$0.00	$57.25
	01/01/2020	$33.25	$8.15	$16.95	$0.00	$58.35
	07/01/2020	$34.35	$8.15	$16.95	$0.00	$59.45
	01/01/2021	$35.45	$8.15	$16.95	$0.00	$60.55

Classification	Effective Date	Base Wage	Health	Pension	Supplemental Unemployment	Total Rate

Apprentice - *PAINTER Local 35 Zone 3 - Spray/Sandblast - Repaint*

Effective Date - 07/01/2018

Step	percent	Apprentice Base Wage	Health	Pension	Supplemental Unemployment	Total Rate
1	50	$15.35	$8.15	$0.00	$0.00	$23.50
2	55	$16.89	$8.15	$3.19	$0.00	$28.23
3	60	$18.42	$8.15	$3.48	$0.00	$30.05
4	65	$19.96	$8.15	$3.77	$0.00	$31.88
5	70	$21.49	$8.15	$14.51	$0.00	$44.15
6	75	$23.03	$8.15	$14.80	$0.00	$45.98
7	80	$24.56	$8.15	$15.09	$0.00	$47.80
8	90	$27.63	$8.15	$15.67	$0.00	$51.45

Effective Date - 01/01/2019

Step	percent	Apprentice Base Wage	Health	Pension	Supplemental Unemployment	Total Rate
1	50	$15.53	$8.15	$0.00	$0.00	$23.68
2	55	$17.08	$8.15	$3.49	$0.00	$28.72
3	60	$18.63	$8.15	$3.81	$0.00	$30.59
4	65	$20.18	$8.15	$4.13	$0.00	$32.46
5	70	$21.74	$8.15	$15.05	$0.00	$44.94
6	75	$23.29	$8.15	$15.36	$0.00	$46.80
7	80	$24.84	$8.15	$15.68	$0.00	$48.67
8	90	$27.95	$8.15	$16.32	$0.00	$52.42

Notes:

Steps are 750 hrs.

Apprentice to Journeyworker Ratio:1:1

PAINTER / TAPER (BRUSH, NEW) *	07/01/2018	$31.98	$8.15	$16.25	$0.00	$56.38
* If 30% or more of surfaces to be painted are new construction, NEW paint rate shall be used.*PAINTERS LOCAL 35 - ZONE 3*	01/01/2019	$32.33	$8.15	$16.95	$0.00	$57.43
	07/01/2019	$34.43	$8.15	$16.95	$0.00	$59.53
	01/01/2020	$34.53	$8.15	$16.95	$0.00	$59.63
	07/01/2020	$35.63	$8.15	$16.95	$0.00	$60.73
	01/01/2021	$36.73	$8.15	$16.95	$0.00	$61.83

Classification	Effective Date	Base Wage	Health	Pension	Supplemental Unemployment	Total Rate

Apprentice - *PAINTER - Local 35 Zone 3 - BRUSH NEW*

Effective Date - 07/01/2018

Step	percent	Apprentice Base Wage	Health	Pension	Supplemental Unemployment	Total Rate
1	50	$15.99	$8.15	$0.00	$0.00	$24.14
2	55	$17.59	$8.15	$3.19	$0.00	$28.93
3	60	$19.19	$8.15	$3.48	$0.00	$30.82
4	65	$20.79	$8.15	$3.77	$0.00	$32.71
5	70	$22.39	$8.15	$14.51	$0.00	$45.05
6	75	$23.99	$8.15	$14.80	$0.00	$46.94
7	80	$25.58	$8.15	$15.09	$0.00	$48.82
8	90	$28.78	$8.15	$15.67	$0.00	$52.60

Effective Date - 01/01/2019

Step	percent	Apprentice Base Wage	Health	Pension	Supplemental Unemployment	Total Rate
1	50	$16.17	$8.15	$0.00	$0.00	$24.32
2	55	$17.78	$8.15	$3.49	$0.00	$29.42
3	60	$19.40	$8.15	$3.81	$0.00	$31.36
4	65	$21.01	$8.15	$4.13	$0.00	$33.29
5	70	$22.63	$8.15	$15.05	$0.00	$45.83
6	75	$24.25	$8.15	$15.36	$0.00	$47.76
7	80	$25.86	$8.15	$15.68	$0.00	$49.69
8	90	$29.10	$8.15	$16.32	$0.00	$53.57

Notes:

Steps are 750 hrs.

Apprentice to Journeyworker Ratio:1:1

PAINTER / TAPER (BRUSH, REPAINT) *PAINTERS LOCAL 35 - ZONE 3*	07/01/2018	$29.30	$8.15	$16.25	$0.00	$53.70
	01/01/2019	$29.65	$8.15	$16.95	$0.00	$54.75
	07/01/2019	$30.81	$8.15	$16.95	$0.00	$55.91
	01/01/2020	$31.85	$8.15	$16.95	$0.00	$56.95
	07/01/2020	$32.95	$8.15	$16.95	$0.00	$58.05
	01/01/2021	$34.05	$8.15	$16.95	$0.00	$59.15

Classification	Effective Date	Base Wage	Health	Pension	Supplemental Unemployment	Total Rate

Apprentice - *PAINTER Local 35 Zone 3 - BRUSH REPAINT*

Effective Date - 07/01/2018

Step	percent	Apprentice Base Wage	Health	Pension	Supplemental Unemployment	Total Rate
1	50	$14.65	$8.15	$0.00	$0.00	$22.80
2	55	$16.12	$8.15	$3.19	$0.00	$27.46
3	60	$17.58	$8.15	$3.48	$0.00	$29.21
4	65	$19.05	$8.15	$3.77	$0.00	$30.97
5	70	$20.51	$8.15	$14.51	$0.00	$43.17
6	75	$21.98	$8.15	$14.80	$0.00	$44.93
7	80	$23.44	$8.15	$15.09	$0.00	$46.68
8	90	$26.37	$8.15	$15.67	$0.00	$50.19

Effective Date - 01/01/2019

Step	percent	Apprentice Base Wage	Health	Pension	Supplemental Unemployment	Total Rate
1	50	$14.83	$8.15	$0.00	$0.00	$22.98
2	55	$16.31	$8.15	$3.49	$0.00	$27.95
3	60	$17.79	$8.15	$3.81	$0.00	$29.75
4	65	$19.27	$8.15	$4.13	$0.00	$31.55
5	70	$20.76	$8.15	$15.05	$0.00	$43.96
6	75	$22.24	$8.15	$15.36	$0.00	$45.75
7	80	$23.72	$8.15	$15.68	$0.00	$47.55
8	90	$26.69	$8.15	$16.32	$0.00	$51.16

Notes:

Steps are 750 hrs.

Apprentice to Journeyworker Ratio:1:1

PAINTER TRAFFIC MARKINGS (HEAVY/HIGHWAY) *LABORERS - ZONE 3 (HEAVY & HIGHWAY)*	06/01/2018	$31.00	$7.70	$11.28	$0.00	$49.98
	12/01/2018	$31.76	$7.70	$11.28	$0.00	$50.74
	06/01/2019	$32.55	$7.70	$11.28	$0.00	$51.53
	12/01/2019	$33.34	$7.70	$11.28	$0.00	$52.32
	06/01/2020	$34.15	$7.70	$11.28	$0.00	$53.13
	12/01/2020	$34.96	$7.70	$11.28	$0.00	$53.94
	06/01/2021	$35.80	$7.70	$11.28	$0.00	$54.78
	12/01/2021	$36.63	$7.70	$11.28	$0.00	$55.61
For apprentice rates see "Apprentice- LABORER (Heavy and Highway)						
PANEL & PICKUP TRUCKS DRIVER *TEAMSTERS JOINT COUNCIL NO. 10 ZONE B*	12/01/2012	$30.28	$9.07	$8.00	$0.00	$47.35
PIER AND DOCK CONSTRUCTOR (UNDERPINNING AND DECK) *PILE DRIVER LOCAL 56 (ZONE 3)*	08/01/2018	$41.57	$9.90	$21.15	$0.00	$72.62
	08/01/2019	$43.79	$9.90	$21.15	$0.00	$74.84
For apprentice rates see "Apprentice- PILE DRIVER"						
PILE DRIVER *PILE DRIVER LOCAL 56 (ZONE 3)*	08/01/2018	$41.57	$9.90	$21.15	$0.00	$72.62
	08/01/2019	$43.79	$9.90	$21.15	$0.00	$74.84

Classification	Effective Date	Base Wage	Health	Pension	Supplemental Unemployment	Total Rate

Apprentice - *PILE DRIVER - Local 56 Zone 3*

Effective Date - 08/01/2018

Step	percent	Apprentice Base Wage	Health	Pension	Supplemental Unemployment	Total Rate
1	0	$0.00	$0.00	$0.00	$0.00	$0.00

Notes: Apprentice wages shall be no less than the following Steps;
(Same as set in Zone 1)
1$54.34/2$58.99/3$63.65/4$65.98/5$68.31/6$68.31/7$72.96/8$72.96

Apprentice to Journeyworker Ratio:1:5

PIPELAYER *LABORERS - ZONE 3 (BUILDING & SITE)*	06/04/2018	$31.25	$7.70	$13.29	$0.00	$52.24
	12/03/2018	$32.02	$7.70	$13.29	$0.00	$53.01
	06/03/2019	$32.83	$7.70	$13.29	$0.00	$53.82
	12/02/2019	$33.64	$7.70	$13.29	$0.00	$54.63
For apprentice rates see "Apprentice- LABORER"						
PIPELAYER (HEAVY & HIGHWAY) *LABORERS - ZONE 3 (HEAVY & HIGHWAY)*	06/01/2018	$31.25	$7.70	$11.28	$0.00	$50.23
	12/01/2018	$32.01	$7.70	$11.28	$0.00	$50.99
	06/01/2019	$32.80	$7.70	$11.28	$0.00	$51.78
	12/01/2019	$33.59	$7.70	$11.28	$0.00	$52.57
	06/01/2020	$34.40	$7.70	$11.28	$0.00	$53.38
	12/01/2020	$35.21	$7.70	$11.28	$0.00	$54.19
	06/01/2021	$36.05	$7.70	$11.28	$0.00	$55.03
	12/01/2021	$36.88	$7.70	$11.28	$0.00	$55.86
For apprentice rates see "Apprentice- LABORER (Heavy and Highway)						
PLUMBER & PIPEFITTER *PLUMBERS & PIPEFITTERS LOCAL 104*	03/17/2018	$39.51	$8.50	$15.80	$0.00	$63.81
	09/17/2018	$40.11	$8.50	$15.95	$0.00	$64.56
	03/17/2019	$40.86	$8.50	$15.95	$0.00	$65.31

Classification	Effective Date	Base Wage	Health	Pension	Supplemental Unemployment	Total Rate

Apprentice - *PLUMBER/PIPEFITTER - Local 104*

Effective Date - 03/17/2018

Step	percent	Apprentice Base Wage	Health	Pension	Supplemental Unemployment	Total Rate
1	45	$17.78	$8.50	$9.30	$0.00	$35.58
2	50	$19.76	$8.50	$9.30	$0.00	$37.56
3	55	$21.73	$8.50	$9.30	$0.00	$39.53
4	60	$23.71	$8.50	$9.30	$0.00	$41.51
5	65	$25.68	$8.50	$9.30	$0.00	$43.48
6	70	$27.66	$8.50	$9.30	$0.00	$45.46
7	75	$29.63	$8.50	$9.30	$0.00	$47.43
8	80	$31.61	$8.50	$9.30	$0.00	$49.41
9	80	$31.61	$8.50	$15.80	$0.00	$55.91
10	80	$31.61	$8.50	$15.80	$0.00	$55.91

Effective Date - 09/17/2018

Step	percent	Apprentice Base Wage	Health	Pension	Supplemental Unemployment	Total Rate
1	45	$18.05	$8.50	$9.45	$0.00	$36.00
2	50	$20.06	$8.50	$9.45	$0.00	$38.01
3	55	$22.06	$8.50	$9.45	$0.00	$40.01
4	60	$24.07	$8.50	$9.45	$0.00	$42.02
5	65	$26.07	$8.50	$9.45	$0.00	$44.02
6	70	$28.08	$8.50	$9.45	$0.00	$46.03
7	75	$30.08	$8.50	$9.45	$0.00	$48.03
8	80	$32.09	$8.50	$9.45	$0.00	$50.04
9	80	$32.09	$8.50	$15.95	$0.00	$56.54
10	80	$32.09	$8.50	$15.95	$0.00	$56.54

Notes: **1:1,2:5,3:9,4:12

Apprentice to Journeyworker Ratio:**

PNEUMATIC CONTROLS (TEMP.) *PLUMBERS & PIPEFITTERS LOCAL 104*	03/17/2018	$39.51	$8.50	$15.80	$0.00	$63.81
	09/17/2018	$40.11	$8.50	$15.95	$0.00	$64.56
	03/17/2019	$40.86	$8.50	$15.95	$0.00	$65.31
For apprentice rates see "Apprentice- PIPEFITTER" or "PLUMBER/PIPEFITTER"						
PNEUMATIC DRILL/TOOL OPERATOR (HEAVY & HIGHWAY) *LABORERS - ZONE 3 (HEAVY & HIGHWAY)*	06/01/2018	$31.25	$7.70	$11.28	$0.00	$50.23
	12/01/2018	$32.01	$7.70	$11.28	$0.00	$50.99
	06/01/2019	$32.80	$7.70	$11.28	$0.00	$51.78
	12/01/2019	$33.59	$7.70	$11.28	$0.00	$52.57
	06/01/2020	$34.40	$7.70	$11.28	$0.00	$53.38
	12/01/2020	$35.21	$7.70	$11.28	$0.00	$54.19
	06/01/2021	$36.05	$7.70	$11.28	$0.00	$55.03
	12/01/2021	$36.88	$7.70	$11.28	$0.00	$55.86
For apprentice rates see "Apprentice- LABORER (Heavy and Highway)						

Classification	Effective Date	Base Wage	Health	Pension	Supplemental Unemployment	Total Rate
POWDERMAN & BLASTER *LABORERS - ZONE 3 (BUILDING & SITE)*	06/04/2018	$32.00	$7.70	$13.29	$0.00	$52.99
	12/03/2018	$32.77	$7.70	$13.29	$0.00	$53.76
	06/03/2019	$33.58	$7.70	$13.29	$0.00	$54.57
	12/02/2019	$34.39	$7.70	$13.29	$0.00	$55.38
For apprentice rates see "Apprentice- LABORER"						
POWDERMAN & BLASTER (HEAVY & HIGHWAY) *LABORERS - ZONE 3 (HEAVY & HIGHWAY)*	06/01/2018	$32.00	$7.70	$11.28	$0.00	$50.98
	12/01/2018	$32.76	$7.70	$11.28	$0.00	$51.74
	06/01/2019	$33.55	$7.70	$11.28	$0.00	$52.53
	12/01/2019	$34.34	$7.70	$11.28	$0.00	$53.32
	06/01/2020	$35.15	$7.70	$11.28	$0.00	$54.13
	12/01/2020	$35.96	$7.70	$11.28	$0.00	$54.94
	06/01/2021	$36.80	$7.70	$11.28	$0.00	$55.78
	12/01/2021	$37.63	$7.70	$11.28	$0.00	$56.61
For apprentice rates see "Apprentice- LABORER (Heavy and Highway)						
PUMP OPERATOR (CONCRETE) *OPERATING ENGINEERS LOCAL 98*	06/01/2018	$34.54	$11.19	$13.44	$0.00	$59.17
	12/01/2018	$35.14	$11.19	$13.71	$0.00	$60.04
	06/01/2019	$35.65	$11.19	$13.98	$0.00	$60.82
	12/01/2019	$36.25	$11.19	$14.25	$0.00	$61.69
For apprentice rates see "Apprentice- OPERATING ENGINEERS"						
PUMP OPERATOR (DEWATERING, OTHER) *OPERATING ENGINEERS LOCAL 98*	06/01/2018	$34.01	$11.19	$13.44	$0.00	$58.64
	12/01/2018	$34.61	$11.19	$13.71	$0.00	$59.51
	06/01/2019	$35.12	$11.19	$13.98	$0.00	$60.29
	12/01/2019	$35.72	$11.19	$14.25	$0.00	$61.16
For apprentice rates see "Apprentice- OPERATING ENGINEERS"						
READY-MIX CONCRETE DRIVER *TEAMSTERS LOCAL 404*	05/01/2016	$21.01	$10.23	$9.40	$0.00	$40.64
RIDE-ON MOTORIZED BUGGY OPERATOR *LABORERS - ZONE 3 (BUILDING & SITE)*	06/04/2018	$31.25	$7.70	$13.29	$0.00	$52.24
	12/03/2018	$32.02	$7.70	$13.29	$0.00	$53.01
	06/03/2019	$32.83	$7.70	$13.29	$0.00	$53.82
	12/02/2019	$33.64	$7.70	$13.29	$0.00	$54.63
For apprentice rates see "Apprentice- LABORER"						
ROLLER OPERATOR *OPERATING ENGINEERS LOCAL 98*	06/01/2018	$33.40	$11.19	$13.44	$0.00	$58.03
	12/01/2018	$34.00	$11.19	$13.71	$0.00	$58.90
	06/01/2019	$34.51	$11.19	$13.98	$0.00	$59.68
	12/01/2019	$35.11	$11.19	$14.25	$0.00	$60.55
For apprentice rates see "Apprentice- OPERATING ENGINEERS"						
ROOFER (Coal tar pitch) *ROOFERS LOCAL 248*	07/16/2018	$32.31	$10.00	$15.10	$0.00	$57.41
	07/16/2019	$33.96	$10.00	$15.20	$0.00	$59.16
For apprentice rates see "Apprentice- ROOFER"						
ROOFER (Inc.Roofer Waterproofng &Roofer Damproofg) *ROOFERS LOCAL 248*	07/16/2018	$31.81	$10.00	$14.60	$0.00	$56.41
	07/16/2019	$33.46	$10.00	$14.70	$0.00	$58.16

Classification	Effective Date	Base Wage	Health	Pension	Supplemental Unemployment	Total Rate

Apprentice - *ROOFER - Local 248*

Effective Date - 07/16/2018

Step	percent	Apprentice Base Wage	Health	Pension	Supplemental Unemployment	Total Rate
1	60	$19.09	$10.00	$0.00	$0.00	$29.09
2	65	$20.68	$10.00	$14.60	$0.00	$45.28
3	70	$22.27	$10.00	$14.60	$0.00	$46.87
4	75	$23.86	$10.00	$14.60	$0.00	$48.46
5	80	$25.45	$10.00	$14.60	$0.00	$50.05
6	85	$27.04	$10.00	$14.60	$0.00	$51.64
7	90	$28.63	$10.00	$14.60	$0.00	$53.23
8	95	$30.22	$10.00	$14.60	$0.00	$54.82

Notes:

Steps are 750 hrs.Roofer(Tear Off)1:1; Same as above

Apprentice to Journeyworker Ratio:1:3

ROOFER SLATE / TILE / PRECAST CONCRETE *ROOFERS LOCAL 248*	07/16/2018	$32.31	$10.00	$15.10	$0.00	$57.41
	07/16/2019	$33.96	$10.00	$15.20	$0.00	$59.16
For apprentice rates see "Apprentice- ROOFER"						
SCRAPER *OPERATING ENGINEERS LOCAL 98*	06/01/2018	$34.01	$11.19	$13.44	$0.00	$58.64
	12/01/2018	$34.61	$11.19	$13.71	$0.00	$59.51
	06/01/2019	$35.12	$11.19	$13.98	$0.00	$60.29
	12/01/2019	$35.72	$11.19	$14.25	$0.00	$61.16
For apprentice rates see "Apprentice- OPERATING ENGINEERS"						
SELF-POWERED ROLLERS AND COMPACTORS (TAMPERS) *OPERATING ENGINEERS LOCAL 98*	06/01/2018	$33.40	$11.19	$13.44	$0.00	$58.03
	12/01/2018	$34.00	$11.19	$13.71	$0.00	$58.90
	06/01/2019	$34.51	$11.19	$13.98	$0.00	$59.68
	12/01/2019	$35.11	$11.19	$14.25	$0.00	$60.55
For apprentice rates see "Apprentice- OPERATING ENGINEERS"						
SELF-PROPELLED POWER BROOM *OPERATING ENGINEERS LOCAL 98*	06/01/2018	$30.78	$11.19	$13.44	$0.00	$55.41
	12/01/2018	$31.38	$11.19	$13.71	$0.00	$56.28
	06/01/2019	$31.89	$11.19	$13.98	$0.00	$57.06
	12/01/2019	$32.49	$11.19	$14.25	$0.00	$57.93
For apprentice rates see "Apprentice- OPERATING ENGINEERS"						
SHEETMETAL WORKER *SHEETMETAL WORKERS LOCAL 63*	07/01/2018	$33.74	$10.64	$16.22	$1.77	$62.37
	01/01/2019	$34.74	$10.64	$16.22	$1.77	$63.37
	07/01/2019	$35.74	$10.64	$16.22	$1.77	$64.37
	01/01/2020	$36.99	$10.64	$16.22	$1.77	$65.62

Classification	Effective Date	Base Wage	Health	Pension	Supplemental Unemployment	Total Rate

Apprentice - *SHEET METAL WORKER - Local 63*

Effective Date - 07/01/2018

Step	percent	Apprentice Base Wage	Health	Pension	Supplemental Unemployment	Total Rate
1	45	$15.18	$6.21	$4.67	$0.00	$26.06
2	50	$16.87	$6.55	$5.19	$0.00	$28.61
3	55	$18.56	$6.88	$9.33	$1.04	$35.81
4	60	$20.24	$7.22	$9.33	$1.10	$37.89
5	65	$21.93	$7.55	$9.33	$1.16	$39.97
6	70	$23.62	$7.88	$9.33	$1.22	$42.05
7	75	$25.31	$8.22	$9.33	$1.29	$44.15
8	80	$26.99	$9.30	$15.18	$1.54	$53.01
9	85	$28.68	$9.64	$15.18	$1.61	$55.11
10	90	$30.37	$9.98	$15.18	$1.67	$57.20

Effective Date - 01/01/2019

Step	percent	Apprentice Base Wage	Health	Pension	Supplemental Unemployment	Total Rate
1	45	$15.63	$6.21	$4.67	$0.00	$26.51
2	50	$17.37	$6.55	$5.19	$0.00	$29.11
3	55	$19.11	$6.88	$9.33	$1.06	$36.38
4	60	$20.84	$7.22	$9.33	$1.12	$38.51
5	65	$22.58	$7.55	$9.33	$1.18	$40.64
6	70	$24.32	$7.88	$9.33	$1.25	$42.78
7	75	$26.06	$8.22	$9.33	$1.31	$44.92
8	80	$27.79	$9.30	$15.18	$1.57	$53.84
9	85	$29.53	$9.64	$15.18	$1.63	$55.98
10	90	$31.27	$9.98	$15.18	$1.69	$58.12

Notes:

Apprentice to Journeyworker Ratio:1:3

SIGN ERECTOR *PAINTERS LOCAL 35 - ZONE 3*	06/01/2013	$25.81	$7.07	$7.05	$0.00	$39.93

Classification	Effective Date	Base Wage	Health	Pension	Supplemental Unemployment	Total Rate

Apprentice - *SIGN ERECTOR - Local 35 Zone 3*

Effective Date - 06/01/2013

Step	percent	Apprentice Base Wage	Health	Pension	Supplemental Unemployment	Total Rate
1	50	$12.91	$7.07	$0.00	$0.00	$19.98
2	55	$14.20	$7.07	$2.45	$0.00	$23.72
3	60	$15.49	$7.07	$2.45	$0.00	$25.01
4	65	$16.78	$7.07	$2.45	$0.00	$26.30
5	70	$18.07	$7.07	$7.05	$0.00	$32.19
6	75	$19.36	$7.07	$7.05	$0.00	$33.48
7	80	$20.65	$7.07	$7.05	$0.00	$34.77
8	85	$21.94	$7.07	$7.05	$0.00	$36.06
9	90	$23.23	$7.07	$7.05	$0.00	$37.35

Notes:

Steps are 4 mos.

Apprentice to Journeyworker Ratio:1:1

SPECIALIZED EARTH MOVING EQUIP < 35 TONS *TEAMSTERS JOINT COUNCIL NO. 10 ZONE B*	12/01/2016	$32.44	$10.91	$10.89	$0.00	$54.24
SPECIALIZED EARTH MOVING EQUIP > 35 TONS *TEAMSTERS JOINT COUNCIL NO. 10 ZONE B*	12/01/2016	$32.73	$10.91	$10.89	$0.00	$54.53
SPRINKLER FITTER *SPRINKLER FITTERS LOCAL 669*	04/01/2018	$41.51	$9.67	$12.88	$0.00	$64.06
	01/01/2019	$41.51	$10.02	$13.08	$0.00	$64.61

Classification	Effective Date	Base Wage	Health	Pension	Supplemental Unemployment	Total Rate

Apprentice - *SPRINKLER FITTER - Local 669*

Effective Date - 04/01/2018

Step	percent	Apprentice Base Wage	Health	Pension	Supplemental Unemployment	Total Rate
1	45	$18.68	$7.75	$0.00	$0.00	$26.43
2	50	$20.76	$7.75	$0.00	$0.00	$28.51
3	55	$22.83	$9.67	$7.05	$0.00	$39.55
4	60	$24.91	$9.67	$7.05	$0.00	$41.63
5	65	$26.98	$9.67	$7.30	$0.00	$43.95
6	70	$29.06	$9.67	$7.30	$0.00	$46.03
7	75	$31.13	$9.67	$7.30	$0.00	$48.10
8	80	$33.21	$9.67	$7.30	$0.00	$50.18
9	85	$35.28	$9.67	$7.30	$0.00	$52.25
10	90	$37.36	$9.67	$7.30	$0.00	$54.33

Effective Date - 01/01/2019

Step	percent	Apprentice Base Wage	Health	Pension	Supplemental Unemployment	Total Rate
1	45	$18.68	$7.75	$0.00	$0.00	$26.43
2	50	$20.76	$7.75	$0.00	$0.00	$28.51
3	55	$22.83	$10.02	$7.25	$0.00	$40.10
4	60	$24.91	$10.02	$7.25	$0.00	$42.18
5	65	$26.98	$10.02	$7.50	$0.00	$44.50
6	70	$29.06	$10.02	$7.50	$0.00	$46.58
7	75	$31.13	$10.02	$7.50	$0.00	$48.65
8	80	$33.21	$10.02	$7.50	$0.00	$50.73
9	85	$35.28	$10.02	$7.50	$0.00	$52.80
10	90	$37.36	$10.02	$7.50	$0.00	$54.88

Notes:

Apprentice to Journeyworker Ratio:1:1

TELECOMMUNICATION TECHNICIAN *ELECTRICIANS LOCAL 7*	07/01/2018	$41.21	$10.25	$11.74	$0.00	$63.20
	12/30/2018	$41.91	$10.50	$12.06	$0.00	$64.47
	06/30/2019	$42.66	$10.75	$12.33	$0.00	$65.74
	12/29/2019	$43.41	$11.00	$12.60	$0.00	$67.01

Classification	Effective Date	Base Wage	Health	Pension	Supplemental Unemployment	Total Rate

Apprentice - *TELECOMMUNICATION TECHNICIAN - Local 7*

Effective Date - 07/01/2018

Step	percent	Apprentice Base Wage	Health	Pension	Supplemental Unemployment	Total Rate
1	40	$16.48	$5.55	$0.49	$0.00	$22.52
2	45	$18.54	$5.55	$0.56	$0.00	$24.65
3	50	$20.61	$10.25	$6.92	$0.00	$37.78
4	55	$22.67	$10.25	$6.98	$0.00	$39.90
5	65	$26.79	$10.25	$8.10	$0.00	$45.14
6	70	$28.85	$10.25	$9.17	$0.00	$48.27

Effective Date - 12/30/2018

Step	percent	Apprentice Base Wage	Health	Pension	Supplemental Unemployment	Total Rate
1	40	$16.76	$5.70	$0.50	$0.00	$22.96
2	45	$18.86	$5.70	$0.57	$0.00	$25.13
3	50	$20.96	$10.50	$6.93	$0.00	$38.39
4	55	$23.05	$10.50	$6.99	$0.00	$40.54
5	65	$27.24	$10.50	$8.12	$0.00	$45.86
6	70	$29.34	$10.50	$9.18	$0.00	$49.02

Notes:

Steps are 800 hours

Apprentice to Journeyworker Ratio:1:1

TERRAZZO FINISHERS *BRICKLAYERS LOCAL 3 (SPR/PITT) - MARBLE & TILE*	08/01/2018	$51.85	$10.75	$20.66	$0.00	$83.26
	02/01/2019	$52.49	$10.75	$20.66	$0.00	$83.90
	08/01/2019	$53.84	$10.75	$20.80	$0.00	$85.39
	02/01/2020	$54.48	$10.75	$20.80	$0.00	$86.03
	08/01/2020	$55.83	$10.75	$20.95	$0.00	$87.53
	02/01/2021	$56.47	$10.75	$20.95	$0.00	$88.17
	08/01/2021	$57.87	$10.75	$21.11	$0.00	$89.73
	02/01/2022	$58.46	$10.75	$21.11	$0.00	$90.32

Classification	Effective Date	Base Wage	Health	Pension	Supplemental Unemployment	Total Rate

Apprentice - *TERRAZZO FINISHER-Local 3 Marble/Tile (Spr/Ptt)*

Effective Date - 08/01/2018

Step	percent	Apprentice Base Wage	Health	Pension	Supplemental Unemployment	Total Rate
1	50	$25.93	$10.75	$20.66	$0.00	$57.34
2	60	$31.11	$10.75	$20.66	$0.00	$62.52
3	70	$36.30	$10.75	$20.66	$0.00	$67.71
4	80	$41.48	$10.75	$20.66	$0.00	$72.89
5	90	$46.67	$10.75	$20.66	$0.00	$78.08

Effective Date - 02/01/2019

Step	percent	Apprentice Base Wage	Health	Pension	Supplemental Unemployment	Total Rate
1	50	$26.25	$10.75	$20.66	$0.00	$57.66
2	60	$31.49	$10.75	$20.66	$0.00	$62.90
3	70	$36.74	$10.75	$20.66	$0.00	$68.15
4	80	$41.99	$10.75	$20.66	$0.00	$73.40
5	90	$47.24	$10.75	$20.66	$0.00	$78.65

Notes:

Apprentice to Journeyworker Ratio:1:5

TERRAZZO MECHANIC *BRICKLAYERS LOCAL 3 (SPR/PITT) - MARBLE & TILE*	08/01/2018	$52.95	$10.75	$20.66	$0.00	$84.36
	02/01/2019	$53.57	$10.75	$20.66	$0.00	$84.98
	08/01/2019	$54.92	$10.75	$20.80	$0.00	$86.47
	02/01/2020	$55.55	$10.75	$20.80	$0.00	$87.10
	08/01/2020	$56.90	$10.75	$20.95	$0.00	$88.60
	02/01/2021	$57.54	$10.75	$20.95	$0.00	$89.24
	08/01/2021	$58.94	$10.75	$21.11	$0.00	$90.80
	02/01/2022	$59.51	$10.75	$21.11	$0.00	$91.37

Classification	Effective Date	Base Wage	Health	Pension	Supplemental Unemployment	Total Rate

Apprentice - *TERRAZZO MECH - Local 3 Marble/Tile (Spr/Pitt)*

Effective Date - 08/01/2018

Step	percent	Apprentice Base Wage	Health	Pension	Supplemental Unemployment	Total Rate
1	50	$26.48	$10.75	$20.66	$0.00	$57.89
2	60	$31.77	$10.75	$20.66	$0.00	$63.18
3	70	$37.07	$10.75	$20.66	$0.00	$68.48
4	80	$42.36	$10.75	$20.66	$0.00	$73.77
5	90	$47.66	$10.75	$20.66	$0.00	$79.07

Effective Date - 02/01/2019

Step	percent	Apprentice Base Wage	Health	Pension	Supplemental Unemployment	Total Rate
1	50	$26.79	$10.75	$20.66	$0.00	$58.20
2	60	$32.14	$10.75	$20.66	$0.00	$63.55
3	70	$37.50	$10.75	$20.66	$0.00	$68.91
4	80	$42.86	$10.75	$20.66	$0.00	$74.27
5	90	$48.21	$10.75	$20.66	$0.00	$79.62

Notes:

Apprentice to Journeyworker Ratio:1:5

TEST BORING DRILLER *LABORERS - FOUNDATION AND MARINE*	06/01/2018	$39.35	$7.70	$15.40	$0.00	$62.45
	12/01/2018	$40.30	$7.70	$15.40	$0.00	$63.40
	06/01/2019	$41.30	$7.70	$15.40	$0.00	$64.40
	12/01/2019	$42.30	$7.70	$15.40	$0.00	$65.40
	06/01/2020	$43.29	$7.70	$15.40	$0.00	$66.39
	12/01/2020	$44.27	$7.70	$15.40	$0.00	$67.37
	06/01/2021	$45.29	$7.70	$15.40	$0.00	$68.39
	12/01/2021	$46.30	$7.70	$15.40	$0.00	$69.40

For apprentice rates see "Apprentice- LABORER"

TEST BORING DRILLER HELPER *LABORERS - FOUNDATION AND MARINE*	06/01/2018	$38.07	$7.70	$15.40	$0.00	$61.17
	12/01/2018	$39.02	$7.70	$15.40	$0.00	$62.12
	06/01/2019	$40.02	$7.70	$15.40	$0.00	$63.12
	12/01/2019	$41.02	$7.70	$15.40	$0.00	$64.12
	06/01/2020	$42.01	$7.70	$15.40	$0.00	$65.11
	12/01/2020	$42.99	$7.70	$15.40	$0.00	$66.09
	06/01/2021	$44.01	$7.70	$15.40	$0.00	$67.11
	12/01/2021	$45.02	$7.70	$15.40	$0.00	$68.12

For apprentice rates see "Apprentice- LABORER"

Classification	Effective Date	Base Wage	Health	Pension	Supplemental Unemployment	Total Rate
TEST BORING LABORER *LABORERS - FOUNDATION AND MARINE*	06/01/2018	$37.95	$7.70	$15.40	$0.00	$61.05
	12/01/2018	$38.90	$7.70	$15.40	$0.00	$62.00
	06/01/2019	$39.90	$7.70	$15.40	$0.00	$63.00
	12/01/2019	$40.90	$7.70	$15.40	$0.00	$64.00
	06/01/2020	$41.89	$7.70	$15.40	$0.00	$64.99
	12/01/2020	$42.87	$7.70	$15.40	$0.00	$65.97
	06/01/2021	$43.89	$7.70	$15.40	$0.00	$66.99
	12/01/2021	$44.90	$7.70	$15.40	$0.00	$68.00
For apprentice rates see "Apprentice- LABORER"						
TRACTORS *OPERATING ENGINEERS LOCAL 98*	06/01/2018	$33.40	$11.19	$13.44	$0.00	$58.03
	12/01/2018	$34.00	$11.19	$13.71	$0.00	$58.90
	06/01/2019	$34.51	$11.19	$13.98	$0.00	$59.68
	12/01/2019	$35.11	$11.19	$14.25	$0.00	$60.55
For apprentice rates see "Apprentice- OPERATING ENGINEERS"						
TRAILERS FOR EARTH MOVING EQUIPMENT *TEAMSTERS JOINT COUNCIL NO. 10 ZONE B*	12/01/2016	$33.02	$10.91	$10.89	$0.00	$54.82
TUNNEL WORK - COMPRESSED AIR *LABORERS (COMPRESSED AIR)*	06/01/2018	$50.23	$7.70	$15.80	$0.00	$73.73
	12/01/2018	$51.18	$7.70	$15.80	$0.00	$74.68
	06/01/2019	$52.18	$7.70	$15.80	$0.00	$75.68
	12/01/2019	$53.18	$7.70	$15.80	$0.00	$76.68
	06/01/2020	$54.17	$7.70	$15.80	$0.00	$77.67
	12/01/2020	$55.15	$7.70	$15.80	$0.00	$78.65
	06/01/2021	$56.17	$7.70	$15.80	$0.00	$79.67
	12/01/2021	$57.18	$7.70	$15.80	$0.00	$80.68
For apprentice rates see "Apprentice- LABORER"						
TUNNEL WORK - COMPRESSED AIR (HAZ. WASTE) *LABORERS (COMPRESSED AIR)*	06/01/2018	$52.23	$7.70	$15.80	$0.00	$75.73
	12/01/2018	$53.18	$7.70	$15.80	$0.00	$76.68
	06/01/2019	$54.18	$7.70	$15.80	$0.00	$77.68
	12/01/2019	$55.18	$7.70	$15.80	$0.00	$78.68
	06/01/2020	$56.17	$7.70	$15.80	$0.00	$79.67
	12/01/2020	$57.15	$7.70	$15.80	$0.00	$80.65
	06/01/2021	$58.17	$7.70	$15.80	$0.00	$81.67
	12/01/2021	$59.18	$7.70	$15.80	$0.00	$82.68
For apprentice rates see "Apprentice- LABORER"						
TUNNEL WORK - FREE AIR *LABORERS (FREE AIR TUNNEL)*	06/01/2018	$42.30	$7.70	$15.80	$0.00	$65.80
	12/01/2018	$43.25	$7.70	$15.80	$0.00	$66.75
	06/01/2019	$44.25	$7.70	$15.80	$0.00	$67.75
	12/01/2019	$45.25	$7.70	$15.80	$0.00	$68.75
	06/01/2020	$46.24	$7.70	$15.80	$0.00	$69.74
	12/01/2020	$47.22	$7.70	$15.80	$0.00	$70.72
	06/01/2021	$48.24	$7.70	$15.80	$0.00	$71.74
	12/01/2021	$49.25	$7.70	$15.80	$0.00	$72.75
For apprentice rates see "Apprentice- LABORER"						

Classification	Effective Date	Base Wage	Health	Pension	Supplemental Unemployment	Total Rate
TUNNEL WORK - FREE AIR (HAZ. WASTE) *LABORERS (FREE AIR TUNNEL)*	06/01/2018	$44.30	$7.70	$15.80	$0.00	$67.80
	12/01/2018	$45.25	$7.70	$15.80	$0.00	$68.75
	06/01/2019	$46.25	$7.70	$15.80	$0.00	$69.75
	12/01/2019	$47.25	$7.70	$15.80	$0.00	$70.75
	06/01/2020	$48.24	$7.70	$15.80	$0.00	$71.74
	12/01/2020	$49.22	$7.70	$15.80	$0.00	$72.72
	06/01/2021	$50.24	$7.70	$15.80	$0.00	$73.74
	12/01/2021	$51.25	$7.70	$15.80	$0.00	$74.75
For apprentice rates see "Apprentice- LABORER"						
VAC-HAUL *TEAMSTERS JOINT COUNCIL NO. 10 ZONE B*	12/01/2016	$32.44	$10.91	$10.89	$0.00	$54.24
WAGON DRILL OPERATOR *LABORERS - ZONE 3 (BUILDING & SITE)*	06/04/2018	$31.25	$7.70	$13.29	$0.00	$52.24
	12/03/2018	$32.02	$7.70	$13.29	$0.00	$53.01
	06/03/2019	$32.83	$7.70	$13.29	$0.00	$53.82
	12/02/2019	$33.64	$7.70	$13.29	$0.00	$54.63
For apprentice rates see "Apprentice- LABORER"						
WAGON DRILL OPERATOR (HEAVY & HIGHWAY) *LABORERS - ZONE 3 (HEAVY & HIGHWAY)*	06/01/2018	$31.25	$7.70	$11.28	$0.00	$50.23
	12/01/2018	$32.01	$7.70	$11.28	$0.00	$50.99
	06/01/2019	$32.80	$7.70	$11.28	$0.00	$51.78
	12/01/2019	$33.59	$7.70	$11.28	$0.00	$52.57
	06/01/2020	$34.40	$7.70	$11.28	$0.00	$53.38
	12/01/2020	$35.21	$7.70	$11.28	$0.00	$54.19
	06/01/2021	$36.05	$7.70	$11.28	$0.00	$55.03
	12/01/2021	$36.88	$7.70	$11.28	$0.00	$55.86
For apprentice rates see "Apprentice- LABORER (Heavy and Highway)						
WATER METER INSTALLER *PLUMBERS & PIPEFITTERS LOCAL 104*	03/17/2018	$39.51	$8.50	$15.80	$0.00	$63.81
	09/17/2018	$40.11	$8.50	$15.95	$0.00	$64.56
	03/17/2019	$40.86	$8.50	$15.95	$0.00	$65.31
For apprentice rates see "Apprentice- PLUMBER/PIPEFITTER" or "PLUMBER/GASFITTER"						
Outside Electrical - West						
EQUIPMENT OPERATOR *OUTSIDE ELECTRICAL WORKERS - WEST LOCAL 42*	09/03/2017	$39.92	$8.00	$12.41	$0.00	$60.33
	09/02/2018	$42.26	$8.00	$12.50	$0.00	$62.76
	09/01/2019	$44.67	$8.00	$12.55	$0.00	$65.22
For apprentice rates see "Apprentice- LINEMAN"						
GROUNDMAN *OUTSIDE ELECTRICAL WORKERS - WEST LOCAL 42*	09/03/2017	$25.83	$8.00	$5.33	$0.00	$39.16
	09/02/2018	$28.17	$8.00	$5.41	$0.00	$41.58
	09/01/2019	$30.58	$8.00	$5.48	$0.00	$44.06
For apprentice rates see "Apprentice- LINEMAN"						
GROUNDMAN / TRUCK DRIVER *OUTSIDE ELECTRICAL WORKERS - WEST LOCAL 42*	09/03/2017	$35.22	$8.00	$10.82	$0.00	$54.04
	09/02/2018	$37.56	$8.00	$10.89	$0.00	$56.45
	09/01/2019	$39.97	$8.00	$10.96	$0.00	$58.93
For apprentice rates see "Apprentice- LINEMAN"						
HEAVY EQUIPMENT OPERATOR *OUTSIDE ELECTRICAL WORKERS - WEST LOCAL 42*	09/03/2017	$42.26	$8.00	$13.08	$0.00	$63.34
	09/02/2018	$44.60	$8.00	$13.15	$0.00	$65.75
	09/01/2019	$47.01	$8.00	$13.22	$0.00	$68.23
For apprentice rates see "Apprentice- LINEMAN"						

Classification	Effective Date	Base Wage	Health	Pension	Supplemental Unemployment	Total Rate
JOURNEYMAN LINEMAN *OUTSIDE ELECTRICAL WORKERS - WEST LOCAL 42*	09/03/2017	$46.96	$8.00	$15.41	$0.00	$70.37
	09/02/2018	$49.30	$8.00	$15.48	$0.00	$72.78
	09/01/2019	$51.71	$8.00	$15.55	$0.00	$75.26

Apprentice - *LINEMAN (Outside Electrical) - West Local 42*

Effective Date - 09/03/2017

Step	percent	Apprentice Base Wage	Health	Pension	Supplemental Unemployment	Total Rate
1	60	$28.18	$8.00	$3.35	$0.00	$39.53
2	65	$30.52	$8.00	$3.42	$0.00	$41.94
3	70	$32.87	$8.00	$3.49	$0.00	$44.36
4	75	$35.22	$8.00	$5.06	$0.00	$48.28
5	80	$37.57	$8.00	$5.13	$0.00	$50.70
6	85	$39.92	$8.00	$5.20	$0.00	$53.12
7	90	$42.26	$8.00	$7.28	$0.00	$57.54

Effective Date - 09/02/2018

Step	percent	Apprentice Base Wage	Health	Pension	Supplemental Unemployment	Total Rate
1	60	$29.58	$8.00	$3.39	$0.00	$40.97
2	65	$32.05	$8.00	$3.46	$0.00	$43.51
3	70	$34.51	$8.00	$3.54	$0.00	$46.05
4	75	$36.98	$8.00	$5.11	$0.00	$50.09
5	80	$39.44	$8.00	$5.18	$0.00	$52.62
6	85	$41.91	$8.00	$5.26	$0.00	$55.17
7	90	$44.37	$8.00	$7.33	$0.00	$59.70

Notes:

Apprentice to Journeyworker Ratio:1:2

TELEDATA CABLE SPLICER *OUTSIDE ELECTRICAL WORKERS - WEST LOCAL 42*	02/05/2018	$29.98	$4.70	$3.15	$0.00	$37.83
	02/04/2019	$30.73	$4.70	$3.17	$0.00	$38.60
TELEDATA LINEMAN/EQUIPMENT OPERATOR *OUTSIDE ELECTRICAL WORKERS - WEST LOCAL 42*	02/05/2018	$28.22	$4.70	$3.10	$0.00	$36.02
	02/04/2019	$28.93	$4.70	$3.14	$0.00	$36.77
TELEDATA WIREMAN/INSTALLER/TECHNICIAN *OUTSIDE ELECTRICAL WORKERS - WEST LOCAL 42*	02/05/2018	$28.22	$4.70	$3.10	$0.00	$36.02
	02/04/2019	$28.93	$4.70	$3.14	$0.00	$36.77
TRACTOR-TRAILER DRIVER *OUTSIDE ELECTRICAL WORKERS - WEST LOCAL 42*	09/03/2017	$39.92	$8.00	$12.41	$0.00	$60.33
	09/02/2018	$42.26	$8.00	$12.50	$0.00	$62.76
	09/01/2019	$44.67	$8.00	$12.55	$0.00	$65.22
TREE TRIMMER *OUTSIDE ELECTRICAL WORKERS - WEST LOCAL 42*	01/31/2016	$18.51	$3.55	$0.00	$0.00	$22.06

This classification applies only to tree work done: (a) for a utility company, R.E.A. cooperative, or railroad or coal mining company, and (b) for the purpose of operating, maintaining, or repairing the utility company's equipment, and (c) by a person who is using hand or mechanical cutting methods and is not on the ground. This classification does not apply to wholesale tree removal.

TREE TRIMMER GROUNDMAN *OUTSIDE ELECTRICAL WORKERS - WEST LOCAL 42*	01/31/2016	$16.32	$3.55	$0.00	$0.00	$19.87

This classification applies only to tree work done: (a) for a utility company, R.E.A. cooperative, or railroad or coal mining company, and (b) for the purpose of operating, maintaining, or repairing the utility company's equipment, and (c) by a person who is using hand or mechanical cutting methods and is on the ground. This classification does not apply to wholesale tree removal.

Classification	Effective Date	Base Wage	Health	Pension	Supplemental Unemployment	Total Rate

Additional Apprentice Information:

Minimum wage rates for apprentices employed on public works projects are listed above as a percentage of the pre-determined hourly wage rate established by the Commissioner under the provisions of the M.G.L. c. 149, ss. 26-27D. Apprentice ratios are established by the Division of Apprenticeship Training pursuant to M.G.L. c. 23, ss. 11E-11L.

All apprentices must be registered with the Division of Apprenticeship Training in accordance with M.G.L. c. 23, ss. 11E-11L.

All steps are six months (1000 hours.)
Ratios are expressed in allowable number of apprentices to journeymen or fraction thereof, unless otherwise specified.

** Multiple ratios are listed in the comment field.
*** APP to JM; 1:1, 2:2, 2:3, 3:4, 4:4, 4:5, 4:6, 5:7, 6:7, 6:8, 6:9, 7:10, 8:10, 8:11, 8:12, 9:13, 10:13, 10:14, etc.
**** APP to JM; 1:1, 1:2, 2:3, 2:4, 3:5, 4:6, 4:7, 5:8, 6:9, 6:10, 7:11, 8:12, 8:13, 9:14, 10:15, 10:16, etc.

APPENDIX B

FEDERAL LABOR STANDARDS PROVISIONS

Federal Labor Standards Provisions
(Reproduced from HUD-4010 (2-84)

The Project or Program to which the construction work covered by this contract pertains is being assisted by the United States of America and the following Federal Labor Standards Provisions are included in this Contract pursuant to the provisions applicable to such Federal assistance.

A. 1. (i) Minimum Wages.
All laborers and mechanics employed or working upon the site of the work (or under the United States Housing Act of 1937 or under the Housing Act of 1949 in the construction or development of the project), will be paid unconditionally and not less often than once a week, and without subsequent deduction or rebate on any account (except such payroll deductions as are permitted by regulations issued by the Secretary of Labor under the Copeland Act (29 CFR Part 3), the full amount of wages and bona fide fringe benefits (or cash equivalents thereof) due at time of payment computed at rates not less than those contained in the wage determination of the Secretary of Labor which is attached hereto and made a part hereof, regardless of any contractual relationship which may be alleged to exist between the contractor and such laborers and mechanics. Contributions made or costs reasonably anticipated for bona fide fringe benefits under Section 1(b)(2) of the Davis-Bacon Act on behalf of laborers or mechanics are considered wages paid to such laborers or mechanics, subject to the provisions of 29 CFR 5.5(a)(1)(iv); also, regular contributions made or costs incurred for more than a weekly period (but not less often than quarterly) under plans, funds, or programs, which cover the particular weekly period, are deemed to be constructively made or incurred during such weekly period.

Such laborers and mechanics shall be paid the appropriate wage rate and fringe benefits on the wage determination for the classification of work actually performed, without regard to skill, except as provided in 29 CFR Part 5.5(a)(4). Laborers or mechanics performing work in more than one classification may be compensated at the rate specified for each classification for the time actually worked therein: Provided, That the employer's pay-roll records accurately set forth the time spent in each classification in which work is performed. The wage determination (including any additional classification and wage rates conformed under 29 CFR Part 5.5(a)t1)(ii) and the Davis-Bacon poster (WH-1321) shall be posted at all times by the contractor and its subcontractors at the site of the work in a prominent and accessible place where it can be easily seen by the workers.

(ii)(a) Any class of laborers or mechanics which is not listed in the wage determination and which is to be employed under the contract shall be classified in conformance with the wage determination. HUD shall approve an additional classification and wage rate and fringe benefits therefore only when the following criteria have been met

(1) The work to be performed by the classification requested is not performed by a classification in the wage determination; and

(2) The classification is utilized in the area by the construction industry, and

(3) The proposed wage rate, including any bona fide fringe benefits, bears a reasonable relationship to the wage, rates contained in the wage determination

(b) It the contractor and the laborers and mechanics to be employed In the classification (if known), or their representatives, and HUD or its designee agree on the classification and wage rate (including the amount designated for fringe benefits where appropriate). a report of the action taken shall be sent by HUD or its designee to the Administrator of the Wage and Hour Division, Employment Standards Administration, US Department of Labor, Washington, DC 20210 The Administrator, or an authorized representative, will approve, modify, or disapprove every additional classification action within 30 days of receipt and so advise HUD or its designee or will notify HUD or its designee within the 30-day period that additional time is necessary. (Approved by the Office of Management and Budget under OMB control number 1215-0140.)

(c) In the event the contractor, the laborers or mechanics to be employed in the classification or their representatives, and HUD or its designee do not agree on the proposed classification and wage rate (Including the amount designated for fringe benefits, where appropriate), HUD or its designee shall refer the questions, including the views of all interested parties and the recommendation of HUD or its designee, to the Administrator for determination. The Administrator, or an authorized

representative, will issue a determination within 30 days of receipt and so advise HUD or its designee or will notify HUD or its designee within the 30-day period that additional time is necessary. (Approved by the Office of Management and Budget under OMB Control Number 1215-0140.)

(d) The wage rate (including fringe benefits where appropriate) determined pursuant to subparagraphs (l)(b) or (c) of this paragraph, shall be paid to all workers performing work in the classification under this contract from the first day on which work is performed in the classification.

(iii) Whenever the minimum wage rate prescribed in the contract for a class of laborers or mechanics includes a fringe benefit which is not expressed as an hourly rate, the contractor shall either pay the benefit as stated in the wage determination or shall pay another bona fide fringe benefit or an hourly cash equivalent thereof.

(iv) If the contractor does not make payments to a trustee or other third person, the contractor may consider as part of the wages of any laborer or mechanic the amount of any costs reasonably anticipated in providing bona fide fringe benefits under a plan or program, Provided, That the Secretary of Labor has found, upon the written request of the contractor, that the applicable standards of the Davis-Bacon Act have been met. The Secretary of Labor may require the contractor to set aside in a separate account assets for the meeting of obligations under the plan or program. (Approved by the Office of Management and Budget under OMB Control Number 1215-0140.)

2. Withholding. HUD or its designee shall upon Its own action or upon written request of an authorized representative of the Department of Labor withhold or cause to be withheld from the contractor under this contract or any other Federal contract with the same prime contractor, or any other Federally-assisted contract subject to Davis-Bacon prevailing wage requirements, which is held by the same prime contractor so much of the accrued payments or advances as may be considered necessary to pay laborers and mechanics, including apprentices, trainees and helpers, employed by the contractor or any subcontractor the full amount of wages required by the contract In the event of failure to pay any laborer or mechanic, including any apprentice, trainee or helper, employed or working on the site of the work (or under the United States Housing Act of 1937 or under the Housing Act of 1949 in the construction or development of the project), all or part of the wages required by the contract. HUD or its designee may, after written notice to the contractor, sponsor, applicant or owner, take such action as may be necessary to cause the suspension of any further payment advance, or guarantee of funds under such violations have ceased. HUD or its designee may, after written notice to the contractor, disburse such amounts withheld for and on account of the contractor or subcontractor to the respective employees to whom they are due. The Comptroller General shall make such disbursements in the case of direct Davis-Bacon Act contracts.

3. (i) Payrolls and basic records. Payrolls and basic records relating thereto shall be maintained by the contractor during the course of the work preserved for a period of three years thereafter for all laborers and mechanics working at the site of the work (or under the United States Housing Act of 1937, or under the Housing Act of 1949, in the construction or development of the project). Such records shall contain the name, address, and social security number of each such worker, his or her correct classification, hourly rates or wages paid (Including rates of contributions or costs anticipated for bona fide fringe benefits or cash equivalents thereof of the types described in Section 1 (b) (2) (B) of the Davis-Bacon Act), daily and weekly number of hours worked, deductions made and actual wages paid. Whenever the Secretary of Labor has found under 29 CFR 5.5 (a)(1)(iv) that the wages of any laborer or mechanic include the amount of any costs reasonably anticipated in providing benefits under a plan or program described in Section 1(b)(2)(B) of the Davis-Bacon Act the contractor shall maintain records which show that the commitment to provide such benefits is enforceable that the plan or program is financially responsible and that the plan or program has been communicated in writing to the laborers or mechanics affected and records which show the costs anticipated or me actual cost incurred in providing such benefits. Contractors employing apprentices or trainees under approved programs shall maintain written evidence of the registration of apprenticeship programs and certification of trainee programs the registration of the apprentices and trainees. and the ratios and wage rates prescribed in the applicable programs (Approved by the Office of Management and Budget under OMB Control Numbers 1215-0140 and 1215-0017.)

(ii) (a) The contractor shall submit weekly for each week in which any contract work is performed a copy of all payrolls to HUD or its designee if the agency is a party to the contract but if the agency is not such a party, the contractor will submit the payrolls to the applicant sponsor, or owner, as the case may be, for transmission to HUD or its designee. The payrolls submitted shall set out accurately and completely all of the information required to be maintained under 29 CFR Part 5.5(a)(3)(i). This information may be submitted in any form desired. Optional Form WH-347 is available for this purpose and may be purchased from the Superintendent of Documents (Federal Stock Number 029-005-00014-1), U.S. Government Printing Office, Washington, DC. 20402. The prime contractor is responsible for the submission of copies of payrolls by all subcontractors. (Approved by the Office of Management and Budget under OMB Control Number 1215-0149)

(b) Each payroll submitted shall be accompanied by a Statement of Compliance, signed by the contractor or subcontractor or his or her agent who pays or supervises the payment of the persons employed under the contract and shall certify the following:

(1) That the payroll for the payroll period contains the information required to be maintained under 29 CFR Part 5.5 (a)(3)(i) and that such information is correct and complete;

(2) That each laborer or mechanic (including each helper, apprentice, and trainee) employed on the contract during the payroll period has been paid the full weekly wages earned, without rebate, either directly or indirectly, and that no deductions have been made either directly or indirectly from the full wages earned. other than permissible deductions as set forth in 29 CFR Part 3;

(3) That each laborer or mechanic has been paid not less than the applicable wage rates and fringe benefits or cash equivalents for the classification of work performed, as specified in the applicable wage determination incorporated into the contract

(c) The weekly submission of a properly executed certification set forth on the reverse side of Optional Form WH-347 shall satisfy the requirement for submission of the Statement of Compliance required by paragraph A.3.(ii)(b) of this section.

(d) The falsification of any of the above certifications may subject the contractor or subcontractor to civil or criminal prosecution under Section 1001 of Title 18 and Section 231 of Title 31 of the United States Code.

(iii) The contractor or subcontractor shall make the records required under paragraph A.3.(i) of this section available for inspection, copying, or transcription by authorized representatives of HUD or its designee or the Department of Labor, and shall permit such representatives to interview employees during working hours on the job. If the contractor or subcontractor fails to submit the required records or to make them available, HUD or its designee may, after written notice to the contractor, sponsor, applicant, or owner, take such action as may be necessary to cause the suspension of any further payment, advance, or guarantee of funds. Furthermore, failure to submit the required records upon request or to make such records available may be grounds for debarment action pursuant to 29 CFR Part 5.12.

4. (i) Apprentices and Trainees. Apprentices will be permitted to work at less than the predetermined rate for the work they performed when they are employed pursuant to and individually registered in a bona fide apprenticeship program registered with the U.S. Department of Labor, Employment and Training Administration, Bureau of Apprenticeship and Training, or with a State Apprenticeship Agency recognized by the Bureau, or it a person is employed in his or her first 90 days of probationary employment as an apprentice in such an apprenticeship program, who is not individually registered in the program, but who has been certified by the Bureau of Apprenticeship and Training or a State Apprenticeship Agency (where appropriate) to be eligible for probationary employment as an
apprentice. The allowable ratio of apprentices to journeymen on the job site in any craft classification shall not be greater than the ratio permitted to the contractor as to the entire work force under the registered program. Any worker listed on a payroll at an apprentice wage rate. who is not registered or otherwise employed as stated above, shall be paid not less than the applicable wage rate on the wage determination for the classification of work actually performed. In addition. any apprentice performing work on the job site in excess of the ratio permitted under the registered program shall be paid not less than the applicable wage rate on the wage

determination for the work actually performed. Where a contractor is performing construction on a project in a locality other than that in which its program is registered, the ratios and wage rates (expressed in percentages of the journeyman s hourly rate) specified in the contractor's or subcontractor's registered program shall be observed. Every apprentice must be paid at not less than the rate specified in the registered program for the apprentice's level of progress, expressed as a percentage of the journeyman hourly rate specified in the applicable wage determination. Apprentices shall be paid fringe benefits in accordance with the provisions d the apprenticeship program. If the apprenticeship program does not specify fringe benefits, apprentices must be paid the full amount of fringe benefits listed on the wage determination for the applicable classification. If the Administrator determines that a different practice prevails for the applicable apprentice classification, fringes shall be paid in accordance with that determination. In the event the Bureau of Apprenticeship and Training, or a State Apprenticeship Agency recognized by the Bureau, withdraws approval of an apprenticeship program, the contractor will no longer be permitted to utilize apprentices at less than the applicable predetermined rate for the work performed until an acceptable program is approved.

(ii) Trainees. Except as provided in 29 CFR 5.16, trainees will not be permitted to work at less than the predetermined rate for the work performed unless they are employed pursuant to and individually registered in a program which has received prior approval, evidenced by formal certification by the U.S. Department of Labor, Employment and Training Administration. The ratio of trainees to journeymen on the job site shall not be greater than permitted under the plan approved by the Employment and Training Administration. Every trainee must be paid at not less than the rate specified in the approved program for the trainee's level of progress, expressed as a percentage of the journeyman hourly rate specified in the applicable wage determination. Trainees shall be paid fringe benefits in accordance with the provisions of the trainee program. If the trainee program does not mention fringe benefits, trainees shall be paid the full amount of fringe benefits listed on the wage determination unless the Administrator of the Wage and Hour Division determines that there is an apprenticeship program associated with the corresponding journeyman wage rate on the wage determination which provides for less than full fringe benefits for apprentices. Any employee listed on the payroll at a trainee rate who is not registered and participating in a training plan approved by the Employment and Training Administration shall be paid not less than the applicable wage rate on the wage determination for the work actually performed. In addition, any trainee performing work on the job site in excess of the ratio permitted under the registered program shall be paid not less than the applicable wage rate on the wage determination for the work actually performed. In the event the Employment and Training Administration withdraws approval of a training program, the contractor will no longer be permitted to utilize trainees at less than the applicable predetermined rate for the work performed until an acceptable program is approved.

(iii) Equal employment opportunity. The utilization of apprentices, trainees and journeymen under this part shall be in conformity with the equal employment opportunity requirements of Executive Order 11246, as amended, and 23 CFR Part 30.

5. Compliance with Copeland Act Requirements The contractor shall comply with the requirements of 29 CFR Part 3 which are incorporated by reference in this contract.

6. Subcontracts. The contractor or subcontractor will insert in any subcontracts the clauses contained in 29 CFR 5.5(a)(1) through (10) and such other clauses as HUD or its designee may by appropriate instructions require, and also a clause requiring the subcontractors to include these clauses in any lower tier subcontracts. The prime contractor shall be responsible for the compliance by any subcontractor or lower tier subcontractor with all the contract clauses in 29 CFR Part 5.5.

7. Contract Termination; debarment. A breach of the contract clauses in 29 CFR 5.5 may be grounds for termination of the contract and for debarment as a contractor and a subcontractor as provided in 29 CFR 5.12

8. Compliance with Davis-Bacon and Related Act Requirements. All rulings and interpretations of the Davis-Bacon and Related Acts contained in 29 CFR Parts 1, 3, and 5 are herein incorporated by reference in this contract

9. Disputes concerning labor standards. Disputes arising out of the labor standards provisions of this contract shall not be subject to the

general disputes clause of this contract. Such disputes shall be resolved in accordance with the procedures of the Department of Labor set forth in 29 CFR Parts 5, 6, and 7. Disputes within the meaning of this clause include disputes between the contractor (or any of its subcontractors) and HUD or its designee, the U.S. Department of Labor, or the employees or their representatives.

10. (i) Certification of Eligibility. By entering into this contract, the contractor certifies that neither it (nor he or she) nor any person or firm who has an interest in the contractor's firm is a person or firm ineligible to be awarded Government contracts by virtue of Section 3(a) of the Davis-Bacon Act or 29 CFR 5.12(a)(1) or to be awarded HUD contracts or participate in HUD programs pursuant to 24 CFR Part 24.

(ii) No part of this contract shall be subcontracted to any person or firm ineligible for award of a Government contract by virtue of Section 3(a) of the Davis-Bacon Act or 29 CFR 5.12(a)(1) or to be awarded HUD contracts or participate in HUD programs pursuant to 24 CFR Part 24.

(iii) The penalty for making false statements is prescribed in the U.S. Criminal Code. 18 U.S.C. 1001. Additionally, U.S. Criminal Code, Section 1010, Title 18, U.S.C., "Federal Housing Administration transactions", provides in part "Whoever, for the purpose of influencing in any way the action of such Administration makes, utters or publishes any statement knowing the same to be false shall be fined not more than $5,000 or imprisoned not more than two years, or both."

11. Complaints, Proceedings, or testimony by Employees. No laborer or mechanic to whom the wage, salary. or other labor standards provisions of this Contract are applicable shall be discharged or in any other manner discriminated against by the Contractor or any subcontractor because such employee has filed any complaint or instituted or caused to be instituted any proceeding or has testified or is about to testify in any proceeding under or relating to the labor standards applicable under this Contract to his employer.

B Contract Work Hours and Safety Standards Act. As used in this paragraph, the terms "laborers" and "mechanics" include watchmen and guards.

(1) Overtime requirements. No contractor or subcontractor contracting for any part of the contract work which may require or involve the employment of laborers or mechanics shall require or permit any such laborer or mechanic in any workweek in which he or she is employed on such work to work in excess of forty hours in such workweek unless such laborer or mechanic receives compensation at a rate not less than one and one-half times the basic rate of pay for all hours worked in excess of eight hours in any calendar day or in excess of forty hours in such workweek, whichever is greater

(2) Violation; liability for unpaid wages; liquidated damages. In the event of any violation of the clause set forth in subparagraph (1) of this paragraph, the contractor and any subcontractor responsible therefor shall be liable for the unpaid wages. In addition, such contractor and subcontractor shall be liable to the United States (in the case of work done under contract for the District of Columbia or a territory, to such District or to such territory), for liquidated damages. Such liquidated damages shall be computed with respect to each individual laborer or mechanic, including watchmen and guards, employed in violation of the clause set forth in subparagraph (1) of this paragraph, in the sum of $10 for each calendar day on which such individual was required or permitted to work in excess of eight hours or in excess of the standard workweek of forty hours without payment of the overtime wages required by the clause set forth in subparagraph (1) of this paragraph.

(3) Withholding for unpaid Wages and liquidated damages. HUD or its designee shall upon its own action or upon written request of an authorized representative of the Department of Labor withhold or cause to be withheld, from any moneys payable on account of work performed by the contractor or subcontractor under any such contract or any other Federal contract with the same prime contract, or any other Federally-assisted contract subject to me Contract Work Hours and Safety Standards Act which is held by the same prime contractor such sums as may be determined to be necessary to satisfy any liabilities of such contractor or subcontractor for unpaid wages and liquidated damages as provided in the clause set forth in subparagraph (2) of this paragraph.

(4) Subcontracts. The contractor or subcontractor shall insert in any subcontracts the clauses set forth in subparagraph (1) through (4) of this paragraph

and also a clause requiring the subcontractors to include these clauses in any lower tier subcontracts. The prime contractor shall be responsible for compliance by any subcontractor or lower tier subcontractor with the clauses set forth in subparagraphs (1) through (4) of this paragraph.

C. Health and Safety.

(1) No laborer or mechanic shall be required to work in surroundings or under working conditions which are unsanitary, hazardous, or dangerous to his health and safety as determined under construction safety and health standards promulgated by the Secretary of Labor by regulation.

(2) The Contractor shall comply with all regulations issued by the Secretary of Labor pursuant to Title 29 Part 1926 (formerly part 1518) and failure to comply may result in imposition of sanctions pursuant to the Contract Work Hours and Safety Standards Act (Public Law 91-54, 83 Stat. 96).

(3) The Contractor shall include the provisions of this Article in every subcontract so that such provisions will be binding on each subcontractor. The Contractor shall take such action with respect to any subcontract as the Secretary of Housing and Urban Development or the Secretary of Labor shall direct as a means of enforcing such provisions.

Attachment to Federal Labor Standards Provisions

So-Called "Antikickback Act" and Regulations Promulgated Pursuant Thereto by The Secretary of Labor. United States Department of Labor. Title 18, U.S.C., Section 874 (HUD-4010.1, 2-76) (Replaces section I of the Act of June 13, 1934 (48 Stat. 948, 40 U.S.C., section 276B) pursuant to the Act of June 25, 1948, 62 Stat. 862).

Kickbacks from Public Works Employees

Whoever, by force, intimidation, or threat of procuring dismissal from employment, or by any other manner whatsoever induces any person employed in the construction, prosecution, completion or repair of any public building, public work, or building or work financed in whole or in part by loans or grants from the United States, to give up any part of the compensation to which he is entitled under his contract of employment, shall be fined not more than $5,000 or imprisoned not more than five years, or both.

Section 2 of the Act of June 13, 1934, as amended (48 Stat. 948, 62 Stat. 862, 63 Stat. 108, 72 Stat. 967, 40 U.S.C., section 276c)

The Secretary of Labor shall make reasonable regulations for contractors and subcontractors engaged in the construction, prosecution, completion or repair of buildings, public works or buildings or works financed in whole or in part by loans or grants from the United States, including a provision that each contractor shall furnish weekly a statement with respect to the wages paid each employee during the preceding week. Section 1001 of Title 18 (United States Code) shall apply to such statements.

-xxx- -

Pursuant to the aforesaid Anti-Kickback Act, the Secretary of Labor, United States Department of Labor, has promulgated the regulations hereinafter set forth, which regulations are found in Title 29, Subtitle A, Code of Federal Regulations, Part 3. The term "this part," as used in the regulations hereinafter set forth, refers to Part 3 last above mentioned. Said regulations are as follows:

Title 29- Labor, Subtitle A- Office of the Secretary of Labor, Part 3 Contractors and Subcontractors on Public Building or Public Work Financed in Whole or in part by loans or grants from the United States

Section 3.1 - Purpose and scope.

This part prescribes "anti-kickback" regulations under section 2 of the Act of June 13, 1934, as amended (40 U.S.C. 276c), popularly known as the Copeland Act. This part applies to any contract which is subject to Federal wage standards and which is for the construction, prosecution, completion, or repair of public buildings, public works or buildings or works financed in whole or in part by loans or grants from the United States. The part is intended to aid in the enforcement of the minimum wage provisions of the Davis-Bacon Act and the various statutes dealing with Federally assisted construction that contain similar minimum wage provisions, including those provisions which are not subject to Reorganization Plan No. 14 (e.g., the College Housing Act of 1950, the Federal Water Pollution Control Act, and the Housing Act of l959), and in the enforcement of the overtime provisions of the Contract Work Hours Standards Act whenever they are applicable to construction work. The part details the obligation

of contractors and subcontractors relative to the weekly submission of statements regarding the wages paid on work covered thereby; sets forth the circumstances and procedures governing the making of payroll deductions from the wages of those employed on such work; and delineates the methods of payment permissible on such work.

Section 3.2- Definitions.

As used in the regulations in this part:

(a) The terms "building" or "work" generally include construction activity as distinguished from manufacturing, furnishing of materials, or servicing and maintenance work. The terms include, without limitation, buildings, structures, and improvements of all types, such as bridges, dams, plants, highways, parkways, streets, subways, tunnels, sewers, mains, powerlines, pumping stations, railways, airports, terminals, docks, piers, wharves, ways, lighthouses, buoys, jetties, breakwaters, levees, and canals; dredging, shoring, scaffolding, drilling, blasting, excavating, clearing, and landscaping. Unless conducted in connection with and at the site of such a building or work as is described in the foregoing sentence, the manufacture or furnishing of materials, articles, supplies, or equipment (whether or not a Federal or State agency acquires title to such materials, articles, supplies, or equipment during the course of the manufacture or furnishing, or owns the materials from which they are manufactured or furnished) is not a "building" or "work" within the meaning of the regulations in this part.

(b) The terms "construction," "prosecution," "completion," or "repair" mean all types of work done on a particular building or work at the site thereof, including, without limitation, altering, remodeling, painting and decorating, the transporting of materials and supplies to or from the building or work by the employees of the construction contractor or construction subcontractor, and the manufacturing or furnishing of materials, articles, supplies, or equipment on the site of the building or work, by persons employed at the site by the contractor or subcontractor.

(c) The terms "public building" or "public work" include building or work for whose construction, prosecution, completion, or repair, as defined above, a Federal agency is a contracting party, regardless of whether title thereof is in a Federal agency.

(d) The term "building or work financed in whole or in part by loans or grants from the United States" includes building or work for whose construction, prosecution, completion, or repair, as defined above, payment or part payment is made directly or indirectly from funds provided by loans or grants by a Federal agency. The term does not include building or work for which Federal assistance is limited solely to loan guarantees or insurance.

(e) Every person paid by a contractor or subcontractor in any manner for his labor in the construction, prosecution, completion, or repair of a public building or public work or building or work financed in whole or in part by loans or grants from the United States is "employed" and receiving · wages," regardless of any contractual relationship alleged to exist between him and the real employer.

(f) The term any affiliated person" includes a spouse, child, parent, or other close relative of the contractor or subcontractor; a partner or officer of the contractor or subcontractor; a corporation closely connected with the contractor or subcontractor as parent, subsidiary or otherwise, and an officer or agent of such corporation.

(g) The term "Federal agency" means the United States, the District of Columbia, and all executive departments, independent establishments, administrative agencies, and instrumentalities of the United States and of the District of Columbia, including corporations, all

or substantially all of the stock of which is beneficially owned by the United States, by the District of Columbia, or any of the foregoing departments, establishments, agencies, and instrumentalities.

Section 3.3 - Weekly statement with respect to payment of wages.

(a) As used in this section, the term "employee" shall not apply to persons in classifications higher than that of laborer or mechanic and those who are the immediate supervisors of such employees.

(b) Each contractor or subcontractor engaged in the construction, prosecution, completion, or repair of any public building or public work, or building or work financed in whole or in part by loans or grants from the United States, shall furnish each week a statement with respect to the wages paid each of its employees engaged on work covered by 29 CFR Parts 3 and 5 during the preceding weekly payroll period. This statement shall be executed by the contractor or subcontractor or by an authorized officer or employee of the contractor or subcontractor who supervises the payment of wages and shall be on form WH 348, "Statement of Compliance," or on an identical form on the back of WH 347, "Payroll (For Contractors Optional Use)" or on any form with identical wording. Sample copies of WH 347 and WH 348 may be obtained from the Government contracting or sponsoring agency, and copies of these forms may be purchased at the Government Printing Office.

(c) The requirements of this section shall not apply to any contract of $2,000 or less.

(d) Upon a written finding by the head of a Federal agency, the Secretary of Labor may provide reasonable limitations, variations, tolerances and exemptions from the requirements of this section subject to such conditions as the secretary of Labor may specify.

(29 CFR. 9S, Jan. 4, 1964, as amended at 33 CFR 10186, July 17, 1968)

Section 3.4. - Submission of weekly statements and the preservation and inspection of weekly payroll records.

(a) Each weekly statement required under section 3.3 shall be delivered by the contractor or subcontractor, within seven days after the regular payment date of the payroll period, to the owner, representative of a Federal or State agency at the site of the building or work, the statement shall be mailed by the contractor or subcontractor, within such time, to the owner contracting for or financing the building or work. After such examination and check as may be made, such statement, or a copy thereof, shall be kept available, or shall be transmitted together with a report of any violation, in accordance with applicable procedures prescribed by the United States Department of Labor.

(b) Each contractor or subcontractor shall preserve his weekly payroll records for a period of three years from date of completion of the contract. The payroll records shall set out accurately and completely the name and address of each laborer and mechanic, his correct classification, rate of pay, daily and weekly number of hours worked, deductions made, and actual wages paid. Such payroll records shall be made available at all times for inspection by the contracting officer or his authorized representative, and by authorized representatives of the Department of Labor.

Section 3.5- Payroll deductions permissible without application to or approval of the Secretary of Labor.

Deductions made under the circumstances or in the situations described in the paragraphs of this section may be made without application to and approval of the Secretary of Labor.

(a) Any deduction made in compliance with the requirements of Federal, State or local law, such as Federal or State withholding income taxes and Federal social security taxes.

(b) Any deduction of sums previously paid to the employee as a bona fide prepayment of wages when such prepayment is made without discount or interest. A "bona fide prepayment of wages" is considered to have been made only when cash or its equivalent has been advanced to the person employed in such manner as to give him complete freedom of disposition of the advanced funds.

(c) Any deduction amounts required by court process to be paid to another, unless the deduction is in favor of the contractor, subcontractor or any affiliated person, or when collusion or collaboration exists.

(d) Any deduction constituting a contribution on behalf of the person employed to funds established by the employer or representatives of employees, or both, for the purpose of providing either from principal or income, or both, medical or hospital care, pensions or annuities on retirement, death benefits, compensation for injuries, illness, accidents, sickness, or disability, or for insurance to provide any of the foregoing, or unemployment benefits, vacation pay, savings accounts, or similar payments for the benefit of employees, their families and dependents: Provided, however, That the following standards are met: (I) The deduction is not otherwise prohibited by law; (2) it is either: (i) Voluntarily consented to by the employee in writing and in advance of the period in which the work is to be done and such consent is not a condition either for the obtaining of or for the continuation of employment, or (ii) provided for in a bona fide collective bargaining agreement between the contractor or subcontractor and representatives of its employees; (3) no profit or other benefit is otherwise obtained, directly or indirectly, by the contractor or subcontractor or any affiliated person in the form of commission, dividend, or otherwise; and (4) the deductions shall serve the convenience and interest of the employee.

(e) Any deduction contributing toward the purchase of United States Defense Stamps and Bonds when voluntarily authorized by the employee.

(f) Any deduction requested by the employee to enable him to repay loans to or to purchase shares in credit unions organized and operated in accordance with Federal and State credit union statutes.

(g) Any deduction voluntarily authorized by the employee for the making of contributions to governmental or quasi-governmental agencies, such as the American Red Cross.

(h) Any deduction voluntarily authorized by the employee for the making of contributions to Community Chests, United Givers Funds, and similar charitable organizations.

(i) Any deductions to pay regular union initiation fees and membership dues, not including finds or special assessments: Provided, however, That a collective bargaining agreement between the contractor or subcontractor and representatives of its employees provides for such deductions and the deductions are not otherwise prohibited by law.

(j) Any deduction not more than for the "reasonable cost" of board, lodging, or other facilities meeting the requirements of section 3(m) of the Fair Labor Standards Act of 1938, as amended,

and Part 431 of this title. When such a deduction is made the additional records required under section S16.27(a) of this title shall be kept.

Section 3.6- Payroll deductions permissible with the approval of the Secretary of Labor.

Any contractor or subcontractor may apply to the Secretary of Labor for permission to make any deduction not permitted under section 3.5. The Secretary may grant permission whenever he finds that:

(a) The contractor, subcontractor, or any affiliated person does not make a profit or benefit directly or indirectly from the deduction either in the form of a commission, dividend, or otherwise;

(b) The deduction is not otherwise prohibited by law;

(c) The deduction is either (1) voluntarily consented to by the employee in writing and in advance of the period in which the work is to be done and such consent is not a condition either for the obtaining of employment or its continuance, or (2) provided for in a bona fide collective bargaining agreement between the contractor or subcontractor and representatives of its employees; and

(d) The deduction serves the convenience and interest of the employee.

Section 3.7 - Applications for the approval of the Secretary of Labor.

Any application for the making of payroll deductions under section 3.6 shall comply with the requirements prescribed in the following paragraphs of this section:

(a) The application shall be in writing and shall be addressed to the Secretary of Labor.

(b) The application shall identify the contract or contracts under which the work in question is to be performed. Permission will be given for deductions only on specific, identified contracts, except upon a showing of exceptional circumstances.

(c) The application shall state affirmatively that there is compliance with the standards set forth in the provisions of section 3.6. The affirmation shall be accompanied by a full statement of the facts indicating such compliance.

(d) The application shall include a description of the proposed deduction, the purpose to be served thereby, and the classes of laborers or mechanics from whose wages the proposed deduction would be made.

(e) The application shall state the name and business of any third person to whom any funds obtained from the proposed deductions are to be transmitted and the affiliation of such person, if any, with the applicant.

Section 3.8 - Action by the Secretary of Labor upon applications.

The Secretary of Labor shall decide whether or not the requested deduction is permissible under provisions of section 3.6; and shall notify the applicant in writing of his decision.

Section 3.9 - Prohibited payroll deductions.

Deductions not elsewhere provided for by this part and which are not found to be permissible under section 3.6 are prohibited.

Section 3.10 - Methods of payment of wages.

The payment of wages shall be by cash, negotiable instruments payable on demand, or the additional forms of compensation for which deductions are permissible under this part. No other methods of payment shall be recognized on work subject to the Copeland Act.

Section 3.11- Regulations part of contract.

All contracts made with respect to the construction, prosecution, completion, or repair of any public building or public work or building or work financed in whole or in part by loans or grants from the United States covered by the regulations in this part shall expressly bind the contractor or subcontractor to comply with such of the regulations in this part as may be applicable.

Special Equal Opportunity Provisions:

A. 3-Paragraph Equal Opportunity Clause for Activities and Contracts Not Subject to Executive Order 11246, as Amended (applicable to Federally assisted construction contracts and related subcontracts $10,00 and under)

During the performance of this Contract, the Contractor agrees as follows:

1. The Contractor shall not discriminate against any employee or applicant for employment because of race, color, religion, sex or national origin. The Contractor shall take affirmative action to ensure that applicants for employment are employed, and that employees are treated during employment, without regard to their race, color, religion, sex or national origin. Such action shall include, but not be limited to, the following: employment, upgrading, demotion or transfer; recruitment or recruitment advertising; layoff or termination; rates of pay or other forms of compensation; and selection for training, including apprenticeship.

2. The Contractor shall post in conspicuous places, available to employees and applicants for employment, notices to be provided by contracting officer setting forth the provisions of this nondiscrimination clause. The Contractor **shall state that** all qualified applicants will receive consideration for employment without regard to race, color, religion, sex or national origin.

3. Contractors shall incorporate foregoing requirements in all subcontracts.

B. Executive Order 11246 (contracts/subcontracts above $10,000)

1. Section 202 Equal Opportunity Clause

During the performance of this Contract, the Contractor agrees as follows:

a) The Contractor will not discriminate against any employee or applicant for employment because of race, color, religion, sex or national origin. The Contractor will take affirmative action to ensure that applicants are employed, and that employees are treated during employment, without regard to their race,

color, religion, sex or national origin. Such action shall include, but not be limited to, the following: employment, upgrading, demotion or transfer; recruitment or recruitment advertising; layoff or termination; rates of pay or other forms of compensation; and selection for training, including apprenticeship. The Contractor agrees to post in conspicuous places, available to employees and applicants for employment, notices to be provided setting forth the provisions of this nondiscrimination clause.

b) The Contractor will, in all solicitations or advertisements for employees placed by or on behalf of the Contractor, state that all qualified applicants will receive consideration without regard to race, color, religion, sex or national origin.

c) The Contractor will send to each labor union or representative of workers with which he has a collective bargaining agreement or other contract or understanding, a notice to be provided by the Contract Compliance Officer advising the said labor union or workers' representatives of the Contractor's commitment under this section, and shall post copies of the notice in conspicuous places available to employees and applicants for employment.

d) The Contractor will comply with all provisions of Executive Order 11246 of September 24, 1965, and of the rules, regulations and relevant order of, the Secretary of Labor.

e) The Contractor will furnish all information and reports required by Executive Order 11246 of September 24, 1965, and by rules, regulations and orders of the Secretary of Labor, or pursuant thereto, and will permit access to his books, records and accounts by the Department and the Secretary of Labor for purposes of investigation to ascertain compliance with such rules, regulations and others.

f) In the event of the Contractor's non-compliance with the nondiscrimination clauses of this Contract or with any of the said rules, regulations or orders, this Contract may be canceled, terminated or suspended in whole or in part and the Contractor may be declared ineligible for further Government contracts in accordance with procedures authorized in Executive Order 11246 of September 24, 1965, or by rule, regulation or order of the Secretary of Labor, or as otherwise provided by law.

g) The Contractor will include the provisions of the sentence immediately preceding paragraph a. and the provisions of paragraphs a. through g. in every subcontract or purchase order unless exempted by rules, regulations or orders of the Secretary of Labor issued pursuant to Section 204 of Executive Order 11246 of September 24, 1965, so that such provisions will be binding upon each Subcontractor or vendor. The Contractor will take such action with respect to any subcontract or purchase order as the Department may direct as a means of enforcing such provisions, including sanctions for non-compliance.

Provided, however, that in the event a Contractor becomes involved in, or is threatened with, litigation with a Subcontractor or vendor as a result of such direction by the Department, the Contractor may request the United States to enter into such litigation to protect the interest of the United States.

Notice of Requirement for Affirmative Action to Ensure Equal Employment Opportunity (Executive Order 11246) (applicable to contract/subcontracts exceeding $10,000)

a) The Contractor's attention is called to the "Equal Opportunity Clause" and the "Standard Federal Equal Employment Opportunity Construction Contract Specifications" set forth herein.

b) The goals and timetables for minority and female participation, expressed in percentage terms for the Contractor's aggregate workforce in each trade on all construction work in the covered area, are as follows:

Goals for Minority Participation	Goals for Female Participation
(Insert Goals)	Insert Goals for current year

These goals are applicable to all the Contractor's construction work (whether or not it is Federal or Federally assisted) performed in the covered area. If the Contractor performs construction work in a geographic area located outside of the covered area, it shall apply the goals established for such geographic area where the work is actually performed. With regard to this second area, the Contractor also is subject to the goals for both its Federally involved and non-Federally involved construction.

The Contractor's compliance with the Executive Order and the regulations in 41 CFR part 60-4 shall be based on its implementation of the Equal Opportunity Clause, specific affirmative action obligations required by the specifications set forth in 41 CFR 60-4.3(a), and its efforts to meet the goals established for the geographical area where the contract resulting from this solicitation is to be performed. The hours of minority and female employment and training must be substantially uniform throughout the length of the contract, and in each trade, and the Contractor shall make a good faith effort to employ minorities and women evenly on each of its projects. The transfer of minority or female employees or trainees from Contractor to Contractor or from project to project for the sole purpose of meeting the Contractor's goals shall be a violation of the Contract, the Executive Order and the regulations in 41 CFR 60-4. Compliance with the goals will be measured against the total work hours performed.

c) As used in this notice, and in the contract resulting from the solicitation, the "covered area" is (insert description of the geographical areas where the contract is to be performed giving the state, county, and city, if any).

Standard CDBG Assisted Equal Employment Opportunity Construction Contract Specifications (Executive Order 11246)

a. As used in these specifications:

(1) "Covered area" means the geographical area described in the solicitation from which this Contract resulted.

(2) "Director" means Director, Office of Federal Contract Compliance Program, United States Department of Labor, or any person to whom the Director delegates authority.

(3) "Employer identification number" means the Federal Social Security number used on the Employer's Quarterly Federal Tax Return, U. S. Treasury Department Form 941.

(4) "Minority" includes:

(a) Black (all persons having origins in any of the black African racial groups not of Hispanic origin).

(b) Hispanic (all persons of Mexican, Puerto Rican, Cuban, Central or South American or other Spanish culture or origin, regardless of race).

(c) Asian and Pacific Islander (all persons having origins in any of the original peoples of the Far East, Southeast Asia, the Indian Subcontinent or the Pacific Islands).

(d) American Indian or Alaskan Native (all persons having origins in any of the original peoples of North America and maintaining identifiable tribal affiliations through membership and participation or community identification).

(5) Whenever the Contractor, or any Subcontractor at any tier, subcontracts a portion of the work involving any construction trade, it shall physically include in each subcontract in excess of $10,000 the provisions of these specifications and the notice which contains the applicable goals for minority and female participation and which is set forth in the solicitations from which this Contract resulted. **NOT APPLICABLE TO FILED SUBCONTRACTORS AS DEFINED BY MGL c.149 §44F**

(6) If the Contractor is participating (pursuant to 41 CFR 60-4.5) in a “Hometown Plan” approved by the U. S. Department of Labor in the covered area either individually or through an association, its affirmative action obligations on all work in the plan area (including goals and timetables) shall be in accordance with that plan for those trades which have unions participating in the plan. Contractors must be able to demonstrate their participation in and compliance with the provisions of any such Hometown Plan. Each Contractor or Subcontractor participating in an approved plan is individually required to comply with its obligations under the EEO clause, and to make a good faith effort to achieve each goal under the plan in each trade in which it has employees. The overall good faith performance by other Contractors or Subcontractors toward a goal in an approved Plan does not excuse any covered Contractor's or Subcontractor's failure to take good faith efforts to achieve the plan goals and timetables.

(7) The Contractor shall implement the specific affirmative action standards provided in paragraphs 7a through p of these specifications. The goals set forth in the solicitation from which this Contract resulted are expressed as percentages of the total hours of employment and training of minority and female utilization the Contractor should reasonably be able to achieve in each construction trade in which it has employees in the covered area. Covered construction Contractors performing contracts in geographical areas

where they do not have a Federal or Federally-assisted construction contract shall apply the minority and female goals established for the geographic area where the contract is being performed. Goals are published periodically in the Federal Register in notice form and such notices may be obtained from any Office of Federal Contract Compliance Programs office or from Federal procurement contracting officers. The Contractor is expected to make substantially uniform progress in meeting its goals in each craft during the period specified.

(8) Neither the provisions of any collective bargaining agreement, nor the failure by a union with whom the Contractor has a collective bargaining agreement, to refer either minorities or women shall excuse the Contractor's obligations under these specifications, Executive Order 11246, or the regulations promulgated pursuant thereto.

(9) In order for the nonworking training hours of apprentices and trainees to be counted in meeting the goals, such apprentices and trainees must be employed by the Contractor during the training period, and the Contractor must have made a commitment to employ the apprentices and trainees at the completion of their training, subject to the availability of employment opportunities. Trainees must be trained pursuant to training programs approved by the U. S. Department of Labor.

(10) The Contractor shall take specific affirmative actions to ensure equal employment opportunity. The evaluation of the Contractor's compliance with these specifications shall be based upon its effort to achieve maximum results from its actions. The Contractor shall document these efforts fully, and shall implement affirmative action steps at least as extensive as the following:

(a) Ensure and maintain a working environment free of harassment, intimidation and coercion at all sites, and in all facilities at which the Contractor's employees are assigned to work. The Contractor, where possible, will assign two or more women to each construction project. The Contractor shall specifically ensure that all foremen, superintendents and other on-site supervisory personnel are aware of and carry out the Contractor's obligation to maintain such a working environment, with specific attention to minority or female individuals working at such sites or in such facilities.

(b) Establish and maintain a current list of minority and female recruitment sources, provide written notification to minority and female recruitment sources and to community organizations when the Contractor or its unions have employment opportunities available, and maintain a record of the organizations' responses.

(c) Maintain a current file of the names, addresses and telephone numbers of each minority and female off-the-street applicant and minority or female referral from a union, a recruitment source or community organization and of what action was taken with respect to each such individual. If such individual was sent to the union hiring hall for referral and was not referred back to the Contractor by the union or, if referred, not employed by the Contractor, this shall be documented in the file with the reason

therefor, along with whatever additional actions the Contractor may have taken.

(d) Provide immediate written notification to the Director when the union or unions with which the Contractor has a collective bargaining agreement has nor referred to the Contractor a minority person or woman sent by the Contractor, or when the Contractor has other information that the union referral process has impeded the Contractor's efforts to meet its obligations.

(e) Develop on-the-job training opportunities and/or participate in training programs for the area which expressly include minorities and women, including upgrading programs and apprenticeship and trainee programs relevant to the Contractor's employment needs, especially those programs funded or approved by the Department of Labor. The Contractor shall provide notice of these programs to the sources compiled under 7b above.

(f) Disseminate the Contractor's EEO policy by providing notice of the policy to unions and training programs and requesting their cooperation in assisting the Contractor in meeting its EEO obligations; by including it in any policy manual and collective bargaining agreement; by publicizing it in the company newspaper, annual report, etc.; by specific review of the policy with all management personnel and with all minority and female employees at least once a year; and by posting the company EEO policy on bulletin boards accessible to all employees at each location where construction work is performed.

(g) Review, the company’s EEO policy and affirmative action obligations under these specifications with all employees having any responsibility for hiring, assignment, layoff, termination or other employment decisions including specific review of these items with on-site supervisory personnel such as superintendents, general foremen, etc., prior to the initiation of construction work at any job site. A written record shall be made and maintained identifying the time and place of these meetings, persons attending, subject matter discussed and disposition of the subject matter.

(h) Disseminate the Contractor's EEO policy externally by including it in any advertising in the news media, specifically including minority and female news media, and providing written notification to and discussing the Contractor's EEO policy with other Contractors and Subcontractors with whom the Contractor does or anticipates doing business.

(i) Direct its recruitment efforts, both oral and written, to minority, female and community organizations, to schools with minority and female students and to minority and female recruitment and training organizations serving the Contractor's recruitment area and employment needs. Not later than one month prior to the date for the acceptance of applications for apprenticeship or other training by any recruitment source, the Contractor shall send written notification to organizations such as the above, describing the openings, screening procedures and tests to be used in the selection process.

(j) Encourage present minority and female employees to recruit other minority persons and women and, where reasonable, provide after school, summer and vacation employment to minority and female youth both on the site and in other areas of a Contractor's work force.

(k) Validate all tests and other selection requirements where there is an obligation to do so under 41 CFR Part 60-3.

(I) Conduct, an inventory and evaluation at least of all minority and female personnel for promotional opportunities and encourage these employees to seek or to prepare for, through appropriate training, etc., such opportunities.

(m) Ensure that seniority practices, job classifications, work assignments and other personnel practices, do not have a discriminatory effect by continually monitoring all personnel and employment related activities to ensure that the EEO policy and the Contractor's obligations under these specifications are being carried out.

(n) Ensure that all facilities and company activities are nonsegregated except that separate or single-use toilet and necessary changing facilities shall be provided to assure privacy between the sexes.

(o) Document and maintain a record of all solicitations of offers for subcontracts from minority and female construction contractors and suppliers, including circulation of solicitations to minority and female contractor associations and other business associations.

(p) Conduct a review of all supervisors' adherence to and performance under the Contractor's EEO policies and affirmative action obligations.

(11) Contractors are encouraged to participate in voluntary associations which assist in fulfilling one or more of their affirmative action obligations (7a through p). The efforts of a contractor association, joint contractor-union, contractor-community, or other similar group of which the Contractor is a member and participant, may be asserted as fulfilling any one or more of its obligations under 7a through p of these specifications provided that the Contractor actively participates in the group, makes every effort to assure that the group has a positive impact on the employment of minorities and women in the industry, ensures that the concrete benefits of the program are reflected in the Contractor's minority and female workforce participation, makes a good faith effort to meet its individual goals and timetables, and can provide access to documentation which demonstrates the effectiveness of actions taken on behalf, of the Contractor. The obligation shall not be a defense for the Contractor's non-compliance.

(I2) A single goal for minorities and a separate single goal for women have been established. The Contractor, however, is required to provide equal employment opportunity and to take affirmative action for all minority groups, both male and female, and all women, both minority and nonminority. Consequently, the Contractor may be in violation of the Executive Order if a particular group is employed in a substantially disparate manner (for example, even through the Contractor has achieved its goals for women

generally, the Contractor may be in violation of the Executive Order if a specific minority group of women is underutilized).

(13) The Contractor shall not use the goals and timetables or affirmative action standards to discriminate against any person because of race, color, religion, sex or national origin.

(14) The Contractor shall not enter into any subcontract with any person or firm debarred from Government contracts pursuant to Executive Order 11246.

(15) The Contractor shall carry out such sanctions and penalties for violation of these specifications and of the Equal Opportunity Clause, including suspension, termination and cancellation of existing subcontracts as may be imposed or ordered pursuant to Executive Order 11246, as amended, and its implementing regulations, by the Office of Federal Contract Compliance Programs. Any Contractor who fails to carry out such sanctions and penalties shall be in violation of these specifications and Executive Order 11246, as amended.

(16) The Contractor, in fulfilling its obligations under these specifications, shall implement specific affirmative action steps, at **least as extensive as** those standards prescribed in paragraph 7 of these specifications, so as to achieve maximum results from its efforts to ensure equal employment opportunity. If the Contractor fails to comply with the requirements of the Executive Order, the implementing regulations or these specifications, the Director shall proceed in accordance with 41 CFR 60-4.8.

(17) The Contractor shall designate a responsible official to monitor all employment related activity to ensure that the company EEO policy is being carried out, to submit reports relating to the provisions hereof as may be required by the Government and to keep records. Records shall at least include for each employee the name, address, telephone numbers, construction trade, union affiliation if any, employee identification number when assigned, social security number, race, sex, status (e.g., mechanic, apprentice, trainee, helper or laborer), dates of changes in status, hours worked per week in the indicated trade, rate of pay, and locations at which the work was performed. Records shall be maintained in an easily understandable and retrievable form; however, to the degree that existing records satisfy this requirement, Contractors shall not be required to maintain separate records.

(18) Nothing herein provided shall be construed as a limitation upon the application of other laws which establish different standards of compliance or upon the application of requirements for the hiring of local or other area residents (e.g., those under the Public Works Employment Act of 1977 and the Community Development Block Grant Program).

D. Title VI Clause, Civil Rights Act of 1964

Under Title Vl of the Civil Rights Act of 1964, no person shall, on the grounds of race, color or national origin be excluded from participation in, be denied the benefits of, or be subjected to discrimination under any program or activity receiving Federal financial assistance.

E. Section 109 Clause, Housing and Community Development Act of 1974

No person in the United States shall on the grounds of race, color, national origin or sex be excluded from participation in, be denied the benefits of, or be subjected to discrimination under any program or activity funded in whole or in part with funds made available under this title.

F. "Section 3" Compliance in the Provision of Training, Employment and Business Opportunities (from Federal Register 6/30/94)

The work to be performed under this Contract is subject to the requirements of section 3 of the Housing and Urban Development Act of 1968, as amended, 12 U.S.C. 1701u. (section 3). The purpose of section 3 is to ensure that employment and other economic opportunities generated by HUD assistance or HUD assisted projects covered by section 3 shall, to the greatest extent feasible, be directed to low and very low income persons, particularly persons who are recipients of HUD assistance for housing.

The parties to this contract agree to comply HUD's regulations in 24 CFR 135, which implement section 3. As evidenced by their execution of this contract, the parties to this contract certify that they are under no contractual or other impediment that would prevent them from complying with the part 135 regulations.

The Contractor agrees to send to each labor organization or representative of workers with which the contractor has a collective bargaining agreement or other understanding, if any, a notice advising the said labor organization or workers' representative of the contractor's commitments under this section 3 clause and will post copies of the notice in conspicuous places at the worksite where both employees and applicants for employment or training positions can see the notice. The notice shall describe the section 3 preference, shall set forth minimum number and job titles subject to hire, availability of apprenticeship and training positions, the qualifications for each, and the name and location of the person(s) taking applications for each of the positions; and the anticipated date that the work shall begin.

The Contractor agrees to include this section 3 clause in every subcontract subject to compliance with regulations in 24 CFR part 135, and agrees to take the appropriate action, as provided in an applicable provision of the subcontract or in this section 3 clause, upon finding that the subcontractor is in violation of the regulations in 24 CFR part 135. The contractor will not subcontract with any subcontractor where it has notice or knowledge that the subcontractor has been found in violation of the regulations in 24 CFR Part 135.

The contractor will certify that any vacant employment positions, including training positions, including training positions, that are filled (1) after the contractor is selected but before the contract is executed, and (2) with persons other than those to whom the regulations of 24 CFR part 135 require employment opportunities to be directed, were not filled to circumvent the contractors obligations under 24 CFR part 135.

Non compliance with HUD's regulations in 24 CFR part 135 may result in sanctions, termination of this contract for default, and debarment or suspension from future HUD assisted contracts.

With respect to work performed in connection with section 3 covered Indian Housing Assistance, section 7(b) of the Indian Self Determination and Education Assistance Act (25 USC 450e) also applies to the work to be performed under this contract. Section 7(b)

requires that to the greatest extent feasible (i) preference and opportunities for training and employment shall be given to Indians, and (ii) preference in the award of contracts and subcontracts shall be given to Indian organizations and Indian-owned Economic Enterprises. Parties to this contract that are subject to the provisions of section 3 and section 7(b) agree to comply with section 3 to the maximum extent feasible, but not in derogation of compliance with section 7(b).

The contractor will include the paragraphs of this clause in every subcontract or purchase order unless exempted by rules, regulations, or orders of the Secretary of Labor issued pursuant to section 204 of Executive Order 11246 of 9/25/65, so that such provisions will be binding upon each subcontractor or vendor. The contractor will take such action with respect to any subcontract or purchase order as the Owner, HUD, and MASS. CDBG may direct as a means of enforcing such provisions, including sanctions for noncompliance. Provided however, that in the event a Contractor becomes involved in, or is threatened with, litigation, with a subcontractor or vendor as a result of such direction by the Department, the contractor may request the United States to enter into such litigation to protect the interest of the United States.

The paragraphs of this clause shall be included in any subcontracts for construction, demolition or landscaping over $100,000. If this is a construction, demolition, or landscaping contract for $50,000 or more, and the contractor has over 50 employees, the contractor shall develop a written Affirmative Action Program. The program shall provide detailed steps to guarantee equal employment opportunity for minority groups and shall include a table of job classifications.

G. Rehabilitation Act of 1973, Section 504 Handicapped (if $2,500 or over)

Affirmative Action for Handicapped Workers

1. The Contractor will not discriminate against any employee or applicant for employment because of physical or mental handicap in regard to any position for which the employee or applicant for employment is qualified. The Contractor agrees to take affirmative action to employ, advance in employment and otherwise treat qualified handicapped individuals without discrimination based upon their physical or mental handicap in all employment practices such as the following: employment, upgrading, demotion or transfer, recruitment, advertising, layoff or termination, rates of pay or other forms of compensation, and selection for training, including apprenticeship.

2. The Contractor agrees to comply with the rules, regulations and relevant orders of the Secretary of Labor issued pursuant to the Act.

3. In the event of the Contractor's non-compliance with the requirements of this clause, actions for non-compliance may be taken in accordance with the rules, regulations, and relevant orders of the Secretary of Labor issued pursuant to the Act.

   The Contractor agrees to post in conspicuous places, available to employees and applicants for employment, notices in a form to be prescribed by the Director, provided by or through the contracting officer. Such notices shall state the Contractor's obligation under the law to take affirmative action to employ and advance in employment qualified handicapped employees and applicants for employment, and the rights of applicants and employees.

5. The Contractor will notify each labor union or representative of workers with which it has a collective bargaining agreement or other contract understanding, that the Contractor is bound by the terms of Section 503 of the Rehabilitation Act of 1973, and is committed to take affirmative action to employ and advance in employment physically and mentally handicapped individuals.

6. The Contractor will include the provisions of this clause in every subcontract or purchase order of $2,500 or more unless exempted by rules, regulations or orders of the Secretary issued pursuant to Section 503 of the Act, so that such provisions will be binding upon each Subcontractor or vendor. The Contractor will take such action with respect to any subcontract or purchase order as the Director of the Office of Federal Contract Compliance Programs may direct to enforce such provisions, including action for non-compliance.

H. Section 402 Veterans of the Vietnam Era (if $10,000 or over)
Affirmative Action for Disabled Veterans and Veterans of the Vietnam Era
(Updated clause from 1/5/95 Federal Register Pages 1985-1987 as follows; first paragraph of number 2 and number 8 a-c)

1. The Contractor will not discriminate against any employee or applicant for employment because he or she is a disabled veteran or veteran of the Vietnam era in regard to any position for which the employee or applicant for employment is qualified. The Contractor agrees to take affirmative action to employ, advance in employment and otherwise treat qualified disabled veterans and veterans of the Vietnam era without discrimination based on their disability or veteran status in all employment practices such as the following: employment upgrading, demotion or transfer, recruitment, advertising, layoff or termination, rates of pay or other forms of compensation, and selection for training, including apprenticeship.

2. The Contractor agrees to list all employment openings which exist at the time of the execution of this contract and those which occur during the performance of this contract, including those not generated by this contract and including those occurring at an establishment of the Contractor other than the one wherein the contract is being performed but excluding those of independently operated corporate affiliates, at an appropriate local office of the State employment service system wherein the opening occurs.

   State and local government agencies holding Federal contracts of S10,000 or more shall also list all their suitable openings with the appropriate office of the State employment service, but are not required to provide those reports set forth in paragraphs 4 and 5.

3. Listing of employment openings with the employment service system pursuant to this clause shall be made at least concurrently with the use of any other recruitment source or effort and shall involve the normal obligations which attach to the placing of a bona fide job order, including the acceptance of referrals of veterans and non-veterans. The listing of employment openings does not require the hiring of any particular job applicant or from any particular group of job applicants, and nothing herein is intended to relieve the Contractor from any requirements in Executive Orders or regulations regarding nondiscrimination in employment.

4. The reports required by paragraph 2 of this clause shall include, but not be limited to, periodic reports which shall be filed at least quarterly with the appropriate local office or, where the Contractor has more than one hiring location in a State, with the central office of that State employment service. Such reports shall indicate for each hiring location
   (1) the number of individuals hired during the reporting period,
   (2) the number of nondisabled veterans of the Vietnam era hired,
   (3) the number of disabled veterans of the Vietnam era hired, and
   (4) the total number of disabled veterans hired.

   The reports should include covered veterans hired for on-the-job training under 38 U.S.C. 1987. The Contractor shall submit a report within 30 days after the end of each reporting period wherein any performance is made on this Contract identifying data for each hiring location copies of the reports submitted until the expiration of one year after final payment under the Contract, during which time these reports and related documentation shall be made available, upon request, for examination by any authorized representatives of the contracting officer or of the Secretary of Labor. Documentation would include personnel records respecting job openings, recruitment and placement.

5. Whenever the Contractor becomes contractually bound to the listing provisions of this clause, it shall advise the employment service system in each State where it has establishments of the name and location of each hiring location in the State. As long as the Contractor is contractually bound to these provisions and has so advised the State system, there is no need to advise the State system of subsequent contracts. The Contractor may advise the State system when it is no longer bound by the contract clause.

xxx

7. The provisions of paragraphs 2, 3, 4 and 5 of this clause do not apply to openings which the Contractor proposes to fill from within his own organization or to fill pursuant to a customary and traditional employer-union hiring arrangement. This exclusion does not apply to a particular opening once an employer decides to consider applicants outside of his own organization or employer-union arrangement for that opening.

8. As used in this clause:

   a. "All employment openings" includes all positions except executive and top management, those positions will be filled from within the contractor’s organization or positions lasting three days or less. This term includes full time employment, temporary employment of more than three days’ duration, and part time employment.

   b. "Appropriate office of the State employment service system" means the local office of the Federal-State national system of public employment offices with assigned responsibility for serving the area where the employment opening is to be filled...

   c. "Positions that will be filled from within the contractor’s own organization" means employment openings for which no consideration will be given to persons outside the Contractor's organization (Including any affiliates,

subsidiaries, and the parent companies) and includes any openings which the Contractor proposes to fill from regularly established "recall" lists. The exception does not apply to a particular opening once an employer decides to consider applicants outside his or her own organization.

d. "Openings which the Contractor proposes to fill pursuant to a customary- and traditional employer-union hiring arrangement" means employment openings which the Contractor proposes to fill from union halls, which is part of the customary and traditional hiring relationship which exists between the Contractor and representatives of his employees.

9. The Contractor agrees to comply with the rules, regulations and relevant orders of the Secretary of Labor issued pursuant to the Act.

10. In the event of the Contractor's non-compliance with the requirements of this clause, actions for non-compliance may be taken in accordance with the rules, regulations and relevant orders of the Secretary of Labor issued pursuant to the Act.

11. The Contractor agrees to post in conspicuous places, available to employees and applicants for employment, notices in a form to be prescribed by the Director, provided by or through the contracting officer. Such notice shall state the Contractor's obligation under the law to take affirmative action to employ and advance in employment qualified disabled veterans and veterans of the Vietnam era for employment, and the rights of applicants and employees.

12. The Contractor will notify each labor union or representative of workers with which it has a collective bargaining agreement or other contract understanding, that the Contractor is bound by the terms of the Vietnam Era Veterans Readjustment Assistance Act, and is committed to take affirmative action to employ and advance in employment qualified disabled veterans and veterans of the Vietnam era.

13. The Contractor will include the provisions of this clause in every subcontract or purchase order of $10,000 or more unless exempted by rules, regulations or orders of the Secretary issued pursuant to the Act, so that such provisions will be binding upon each Subcontractor or vendor. The Contractor will take such action with respect to any subcontract or purchase order as the Director of the Office of Federal Contract Compliance Programs may direct to enforce such provisions, including action for non-compliance.

Community Development Block Grant Program

Contractor's Certification
Concerning Labor Standards and Prevailing Wage Requirements

This is to certify that:

_____
(Company Name and Address)

has executed a contract with _____
(Grantee)

for the construction of _____
(Project)

identified as Project Number _____ and acknowledges that:
(Grant #)

a. The Federal Labor Standards Provisions (HUD-4010) are attached to the contract;
b. Correction of any infractions of the Federal Labor Standards Provisions, including infractions by any subcontractor or lower tier subcontractors is this contractor's responsibility;
c. Neither this contractor, any subcontractor or any affiliates have been declared ineligible to participate in federally funded construction projects;
d. Contractor agrees to obtain and forward to the Grantee or Grantee's Representative within ten (10) days after the execution of any subcontract, a Subcontractor's Certification concerning Federal Labor Standards and Prevailing Wage requirements.

Type of Entity: (Check One)

_____ Single Proprietorship _____ Partnership
_____ Corporation _____ Other Organization

List Below the name, title and address of the owner, partner or officers of the entity:

Name	Title	Address

Signature of Owner or Officer of the Company: _____

Date Signed: _____

Telephone Number: _____

This form is no longer required by the U. S. Department of Housing and Urban Development but is required by the Office of Community and Rural Affairs on federally funded construction projects.

Community Development Block Grant Program

Subcontractor's Certification
Concerning Labor Standards and Prevailing Wage Requirements

This is to certify that:

_____
(Subcontractor's Name and Address)

has executed a subcontract with _____
(Prime Contractor)

In the amount of $ _____ for _____
(Nature of Work)

on Project Number _____ and acknowledges that:
(Grant #)

a. The Federal Labor Standards Provisions (HUD-4010) are attached to the contract;
b. Neither this subcontractor or any second or third tier subcontractors or any affiliates have been declared ineligible to participate in federally funded construction projects;
c. Contractor agrees to provide this completed document to the Prime Contractor within ten (10) days after the execution of any subcontract and to adhere to the Federal Labor Standards Provisions in the execution of this subcontract.

Subcontractor is a:
Type of Entity: (Check One)

_____ Single Proprietorship
_____ Partnership
_____ Corporation
_____ Other Organization

List Below the name, title and address of the owner, partner or officers of the entity:

Name	Title	Address

Signature of Owner or Officer of the Subcontractor: _____

Date Signed: _____

Telephone Number: _____

This form is no longer required by the U. S. Department of Housing and Urban Development but is required by the Office of Community and Rural Affairs on federally funded construction projects.

Wage/Fringe Benefit Certification

(To Be Completed by Contractor/Subcontractors Prior to Contract Award.)

GRANTEE:	GRANT:	PROJECT:

This is to certify that _____ plans to use the following classifications of workers on the above referenced project:

From Applicable Wage Decision				Base Wage to be paid by Contractor	Fringe Benefits to be provided by Contractor		Total Package to be paid by Contractor
Classification	Base Wage Due	Fringe Benefits Due	Total Package Due		Benefit	Hourly Amount	

Certified by:	Title:	Date:
(Must be Certified by Owner or Chief Financial Officer)		

U.S. Department of Labor
Employment Standards Administration
Wage and Hour Division

PAYROLL

(For Contractor's Optional Use; See Instructions at www.dol.gov/esa/whd/forms/wh347instr.htm)

Persons are not required to respond to the collection of information unless it displays a currently valid OMB control number.

U.S. Wage and Hour Division
Rev. Dec. 2008

OMB No.: 1215-0149
Expires: 12/31/2011

NAME OF CONTRACTOR ☐ OR SUBCONTRACTOR ☐ ADDRESS

PAYROLL NO. FOR WEEK ENDING PROJECT AND LOCATION PROJECT OR CONTRACT NO.

(1) NAME AND INDIVIDUAL IDENTIFYING NUMBER (e.g., LAST FOUR DIGITS OF SOCIAL SECURITY NUMBER) OF WORKER	(2) NO. OF WITHHOLDING EXEMPTIONS	(3) WORK CLASSIFICATION	OT. OR ST.	(4) DAY AND DATE / HOURS WORKED EACH DAY							(5) TOTAL HOURS	(6) RATE OF PAY	(7) GROSS AMOUNT EARNED	(8) DEDUCTIONS: FICA	WITH-HOLDING TAX			OTHER	TOTAL DEDUCTIONS	(9) NET WAGES PAID FOR WEEK
			O																	
			S																	
			O																	
			S																	
			O																	
			S																	
			O																	
			S																	
			O																	
			S																	
			O																	
			S																	
			O																	
			S																	

While completion of Form WH-347 is optional, it is mandatory for covered contractors and subcontractors performing work on Federally financed or assisted construction contracts to respond to the information collection contained in 29 C.F.R. §§ 3.3, 5.5(a). The Copeland Act (40 U.S.C. § 3145) contractors and subcontractors performing work on Federally financed or assisted construction contracts to "furnish weekly a statement with respect to the wages paid each employee during the preceding week." U.S. Department of Labor (DOL) regulations at 29 C.F.R. § 5.5(a)(3)(ii) require contractors to submit weekly a copy of all payrolls to the Federal agency contracting for or financing the construction project, accompanied by a signed "Statement of Compliance" indicating that the payrolls are correct and complete and that each laborer or mechanic has been paid not less than the proper Davis-Bacon prevailing wage rate for the work performed. DOL and federal contracting agencies receiving this information review the information to determine that employees have received legally required wages and fringe benefits.

Public Burden Statement

We estimate that is will take an average of 55 minutes to complete this collection, including time for reviewing instructions, searching existing data sources, gathering and maintaining the data needed, and completing and reviewing the collection of information. If you have any comments regarding these estimates or any other aspect of this collection, including suggestions for reducing this burden, send them to the Administrator, Wage and Hour Division, ESA, U.S. Department of Labor, Room S3502, 200 Constitution Avenue, N.W. Washington, D.C. 20210

(over)

Date _____

I, _____ _____
(Name of Signatory Party) (Title)

do hereby state:

(1) That I pay or supervise the payment of the persons employed by

_____ on the
(Contractor or Subcontractor)

_____; that during the payroll period commencing on the
(Building or Work)

_____ day of _____, _____, and ending the _____ day of _____, _____,

all persons employed on said project have been paid the full weekly wages earned, that no rebates have been or will be made either directly or indirectly to or on behalf of said

_____ from the full
(Contractor or Subcontractor)

weekly wages earned by any person and that no deductions have been made either directly or indirectly from the full wages earned by any person, other than permissible deductions as defined in Regulations, Part 3 (29 C.F.R. Subtitle A), issued by the Secretary of Labor under the Copeland Act, as amended (48 Stat. 948, 63 Start. 108, 72 Stat. 967; 76 Stat. 357; 40 U.S.C. § 3145), and described below:

(2) That any payrolls otherwise under this contract required to be submitted for the above period are correct and complete; that the wage rates for laborers or mechanics contained therein are not less than the applicable wage rates contained in any wage determination incorporated into the contract; that the classifications set forth therein for each laborer or mechanic conform with the work he performed.

(3) That any apprentices employed in the above period are duly registered in a bona fide apprenticeship program registered with a State apprenticeship agency recognized by the Bureau of Apprenticeship and Training, United States Department of Labor, or if no such recognized agency exists in a State, are registered with the Bureau of Apprenticeship and Training, United States Department of Labor.

(4) That:

(a) WHERE FRINGE BENEFITS ARE PAID TO APPROVED PLANS, FUNDS, OR PROGRAMS

☐ – in addition to the basic hourly wage rates paid to each laborer or mechanic listed in the above referenced payroll, payments of fringe benefits as listed in the contract have been or will be made to appropriate programs for the benefit of such employees, except as noted in section 4(c) below.

(b) WHERE FRINGE BENEFITS ARE PAID IN CASH

☐ – Each laborer or mechanic listed in the above referenced payroll has been paid, as indicated on the payroll, an amount not less than the sum of the applicable basic hourly wage rate plus the amount of the required fringe benefits as listed in the contract, except as noted in section 4(c) below.

(c) EXCEPTIONS

EXCEPTION (CRAFT)	EXPLANATION

REMARKS:	
NAME AND TITLE	SIGNATURE

THE WILLFUL FALSIFICATION OF ANY OF THE ABOVE STATEMENTS MAY SUBJECT THE CONTRACTOR OR SUBCONTRACTOR TO CIVIL OR CRIMINAL PROSECUTION. SEE SECTION 1001 OF TITLE 18 AND SECTION 231 OF TITLE 31 OF THE UNITED STATES CODE.

U.S. DEPARTMENT OF LABOR
WAGE AND HOUR DIVISION

INSTRUCTION FOR COMPLETING PAYROLL FORM, WH-347

General: The use of WH-347, payroll form, is not mandatory. This form has been made available for the convienience of contractors and subcontractors required by their Federal or Federally-aided construction-type contracts and subcontracts to submit weekly payrolls. Properly filled out, this form will satisfy the requirements of Regulations, Parts 3 and 5 (29 CFR, Subtitle A), as to payrolls submitted in connection with contracts subject to the Davis-Bacon and related Acts.

This form meets needs resulting from the amendment of the Davis-Bacon Act to include fringe benefits provisions. Under this amended law, the contractor is required to pay not less than fringe benefits as predetermined by the Department of Labor, in addition to payment of not less than the predetermined rates. The contrator's obligation to pay fringe benefits may be met either by payment of the fringes to the various plans, funds, or programs or by making these payments to the employee as cash in lieu of fringes.

This payroll provides for the contractor's showing on the face of the payroll all monies paid to the employees, whether as basic rates or as cash in lieu of fringes and provides for the contractor's representation in the statement of compliance on the rear of the payroll that he is paying to others fringes required by the contract and not paid as cash in lieu of fringes. Detailed instructions concerning the preparation of the payroll follow:

Contractor or Subcontractor: Fill in your firm's name and check appropriate box.

Address: Fill in your firms's address.

Column 1 - Name, address, and Social Security number of Employee: The employee's full name and Social Security Number must be shown on each weekly payroll submitted. The employee's address must also be shown on the payroll covering the first week in which the employee works on the project. The address need not be shown on subsequent payrolls unless the address changes.

Column 2 - Withholding Exemptions: This column is merely inserted for the employer's convience and is not a requirement of Regulations, Parts 3 and 5.

Column 3 - Work Classifications: List classification descriptive of work actually performed by employees. Consult classifications and minimum wage schedule set forth in contract specifications. If additional classifications are deemed necessary, see Contracting Officer of Agency representative. Employee may be shown as having worked in more than one classification provided accurate breakdown of hours so worked is maintained and shown on submitted payroll by use of separate line entries.

Column 4 - Hours Worked: On all contracts subject to the Contract Work Hours Standards Act enter as overtime hours all hours worked in excess of 8 hours per day and 40 hours in a week.

Column 5 - Total: Self-explanatory.

Column 6 - Rate of Pay: In straight time box, list actual hourly rate paid the employee for straight time worked plus any cash in lieu of fringes paid the employee. When recording the straight time hourly rate, any cash paid in lieu of fringes may be shown separately from the basic rate, thus $3.25/.40. This is of assistance in correctly computing overtime. See "Fringe Benefits" below. In overtime box show overtime hourly rate paid, plus any cash in lieu of fringes paid the employee. See "Fringe Benefits" below. Payment of not less than time and one-half the basic or regular rate paid is required for overtime under the Contract Work Hours Standards Act of 1962. In addition to paying not less than the predetermined rate for the classification in which the employee works, the contractor shall pay to approved plans, funds, or programs or shall pay as cash in lieu of fringes amounts predetermined as fringe benefits in the wage decision made part of the contract. See "FRINGE BENEFITS" below.

Fringe Benefits - Contractors who pay all required fringe benefits: A contractor who pays fringe benefits to approved plans, funds, or programs in the amounts not less than were determined in the applicable wage decisions of the Secretary of Labor shall continue to show on the face of the payroll the basic cash hourly rate and overtime rate paid to his employees just as he has always done. Such a contractor shall check paragraph 4(a) of the statement on the reverse of the payroll to indicate that he is also paying to approved plans, funds, or programs not less than the amount predetermined as fringe benefits for each craft. Any exceptions shall be noted in Section 4(c).

Contractors who pay no fringe benefits: A contractor who pays no fringe benefits shall pay to the employee, and insert in the straight time hourly rate column of the payroll, an amount not less than the predetermined rate for each classification plus the amount of fringe benefits determined for each classification in the applicable wage decision. Inasmuch as it is not necessary to pay time and a half on cash paid in lieu of fringes, the overtime rate shall be not les than the sum of the basic perdetermined rate, plus the half time premium on basic or regular rate, plus the required cash in lieu of fringes at the straight time rate. In addition, the contractor shall check paragraph 4(b) of the statement on the reverse of the payroll to indicate that he is paying fringe benefits in cash directly to his employees. Any exceptions shall be noted in Section 4(c).

Use of Section 4(c), Exceptions

Any contractor who is making payment to approved plans, funds, or programs in amounts less than the wage determination requires is obliged to pay the deficiency directly to the employees as cash in lieu of fringes. Any exceptions to Section 4(a) or 4(b), whichever the contractor may check, shall be entered in Section 4(c). Enter in the Exception column the craft, and enter in the Explanation column the hourly amount paid the employee as cash in lieu of fringes and the hourly amount paid to plans, funds, or programs as fringes. The contractor shall pay, and shall show that he is paying to each such employee for all hours (unless otherwise provided by applicable determination) worked on Federal or Federally assisted project an amount not less than the predetermined rate plus cash in lieu of fringes as shown in Section 4(c). The rate paid and amount of cash paid in lieu of fringe benefits per hour should be entered in column 6 on the payroll. See paragraph on "Contractors who pay no fringe benefits" for computation of overtime rate.

Column 7 - Gross Amount Earned: Enter gross amount earned on this project. If part of the employees' weekly wage was earned on projects other than the project described on this payroll, enter in column 7 first the amount earned on the Federal or Federally assisted project and then the gross amount earned during the week on all projects, thus $63.00/120.00.

Column 8 - Deductions: Five columns are provided for showing deductions made. If more than five deductions should be involved, use first 4 columns; show the balance of deductions under "Other" column; show actual total under "Total Deductions" column; and in the attachment to the payroll describe the deductions contained in the "Other" column. All deductions must be in accordance with the provisions of the Copeland Act Regulations, 29 CFR, Part 3. If the employee worked on other jobs in addition to this project, show actuall deductions from his weekly gross wage, but indicate that deductions are based on his gross wages.

Column 9 - Net Wages Paid for Week: Self-explantory.

Totals - Space has been left at the botom of columns so that totals may be shown if the contractor so desires.

Statement Required by Regulations, Parts 3 and 5: While this form need not be notarized, the statement on the back of the payroll is subject to the penalities provided by 18 USC 1001, namely, possible imprisonment for 5 years or $10,000.00 fine or both. Accordingly, the party signing this required statement should have knowledge of the facts represented as true.

Space has been provided between items (1) and (2) of the statement for describing any deductions made. If all deductions made are adequately described in the "Deductions" column above, state "See Deductions column in this payroll." See paragraph entitled "FRINGE BENEFITS' above for instructions concerning filling out paragraph 4 of the statement.

U.S. Department of Labor
Wage and Hour and Public
Contracts Division

STATEMENT OF COMPLIANCE

Form Approved
Budget Bureau No. 44-R1093

Date_____

I, _____, _____, do hereby state:
(Name of signatory party) (Title)

(1) That I pay or supervise the payment of the persons employed by _____ on the
(Contractor or Subcontractor)
_____; that during the payroll commencing on the
(Building or work)
_____day of _____, _____ and ending the _____ day of _____, _____, all persons employed on said project have been paid the full weekly wages earned, that no rebates have been or will be made either directly or indirectly to or on behalf of said Contractor or Subcontractor from the full weekly wages earned by any person and that no deducions have been made either directly or indirectly from the full wages earned by any person, other than permissible deductions as defined in Regulations, Part 3 (29 CFR Subtitle A), issued by the Secretary of Labor under the Copeland Act, as amended (48 Stat., 948.63 Stat. 108, 72 Stat. 967; 76 Stat. 357; 40 U.S.C. 276c), and described below:

_____

_____

(2) That any payrolls otherwise under this contract required to be submitted for the above period are correct and complete; that the wage rates for laborers or mechanics contained therein are not less than the applicable wage rates contained in any wage determination incorporated into the contract; that the classifications set forth therein for each laborer or mechanic conform with the work he performed.

(3) That any apprentices employed in the above period are duly registered in a bona fide apprenticeship program registered with a State apprenticeship agency recognized by the Bureau of Apprenticeship and Training, United States Department of Labor, or if no such recognized agency exists in a State, are registered with the Bureau of Apprenticeship and Training, United States Department of Labor.

(4) That:

(a) WHERE FRINGE BENEFITS ARE PAID TO APPROVED PLANS, FUNDS, OR PROGRAMS

☐ In addition to the basic hourly wage rates paid to each laborer or mechanic listed in the above referenced payroll, payments of fringe benefits as listed in the contract have been or will be made to appropriate programs for the benefit of such employees, except asnoted in Section 4(c) below.

(b) WHERE FRINGE BENEFITS ARE PAID IN CASH

☐ Each laborer or mechanic listed in the above referenced payroll has been paid as indicated on the payroll, an amount not less than the sum of the applicable basic hourly wage rate plus the amount of the required fringe benefits as listed in the contract, except as noted in Section 4(c) below.

(c) EXCEPTIONS

EXCEPTION (CRAFT)	EXPLANATION

Remarks _____

_____

_____

Name and Title	Signature

The willful falsification of any of the above statements may subject the contractor or subcontractor to civil or criminal prosecution. See Section 1001 of Title 18 and Section 231 of Title 31 of the United States Code.

Form WH-348

EMPLOYEE RIGHTS
UNDER THE DAVIS-BACON ACT

FOR LABORERS AND MECHANICS EMPLOYED ON FEDERAL OR FEDERALLY ASSISTED CONSTRUCTION PROJECTS

THE UNITED STATES DEPARTMENT OF LABOR WAGE AND HOUR DIVISION

PREVAILING WAGES

You must be paid not less than the wage rate listed in the Davis-Bacon Wage Decision posted with this Notice for the work you perform.

OVERTIME

You must be paid not less than one and one-half times your basic rate of pay for all hours worked over 40 in a work week. There are few exceptions.

ENFORCEMENT

Contract payments can be withheld to ensure workers receive wages and overtime pay due, and liquidated damages may apply if overtime pay requirements are not met. Davis-Bacon contract clauses allow contract termination and debarment of contractors from future federal contracts for up to three years. A contractor who falsifies certified payroll records or induces wage kickbacks may be subject to civil or criminal prosecution, fines and/or imprisonment.

APPRENTICES

Apprentice rates apply only to apprentices properly registered under approved Federal or State apprenticeship programs.

PROPER PAY

If you do not receive proper pay, or require further information on the applicable wages, contact the Contracting Officer listed below:

Town of Greenfield
Community Development
Administrator
114 Main St. 413-772-1548 x2

or contact the U.S. Department of Labor's Wage and Hour Division.

For additional information:

1-866-4-USWAGE

(1-866-487-9243) TTY: 1-877-889-5627

WHD U.S. Wage and Hour Division

WWW.WAGEHOUR.DOL.GOV

APPENDIX C

FEDERAL WAGE RATES

General Decision Number: MA180015 07/06/2018 MA15

Superseded General Decision Number: MA20170015

State: Massachusetts

Construction Types: Heavy (Heavy and Marine)

Counties: Berkshire, Franklin, Hampden and Hampshire Counties in Massachusetts.

HEAVY CONSTRUCTION PROJECTS; AND MARINE CONSTRUCTION PROJECTS

Note: Under Executive Order (EO) 13658, an hourly minimum wage of $10.35 for calendar year 2018 applies to all contracts subject to the Davis-Bacon Act for which the contract is awarded (and any solicitation was issued) on or after January 1, 2015. If this contract is covered by the EO, the contractor must pay all workers in any classification listed on this wage determination at least $10.35 per hour (or the applicable wage rate listed on this wage determination, if it is higher) for all hours spent performing on the contract in calendar year 2018. The EO minimum wage rate will be adjusted annually. Please note that this EO applies to the above-mentioned types of contracts entered into by the federal government that are subject to the Davis-Bacon Act itself, but it does not apply to contracts subject only to the Davis-Bacon Related Acts, including those set forth at 29 CFR 5.1(a)(2)-(60). Additional information on contractor requirements and worker protections under the EO is available at www.dol.gov/whd/govcontracts.

Modification Number	Publication Date
0	01/05/2018
1	03/09/2018
2	03/23/2018
3	04/06/2018
4	05/25/2018
5	07/06/2018

BOIL0029-001 01/01/2017

	Rates	Fringes
BOILERMAKER	$ 42.42	24.92

BRMA0001-005 03/01/2018

SPRINGFIELD CHAPTER

	Rates	Fringes
BRICKLAYER		
BRICKLAYERS; CEMENT MASONS; STONE MASONS; MARBLE, TILE & TERRAZO	$ 40.56	30.47

BRMA0001-007 03/01/2018

SPRINGFIELD/PITTSFIELD CHAPTER

BERKSHIRE COUNTY

	Rates	Fringes
BRICKLAYER		
BRICKLAYERS; CEMENT MASONS; STONE MASONS; MARBLE, TILE & TERRAZZO.....	$ 40.56	30.47

CARP0056-004 08/01/2015

	Rates	Fringes
DIVER TENDER.....	$ 42.04	29.73
DIVER.....	$ 58.86	29.73

CARP0056-009 08/01/2015

	Rates	Fringes
PILEDRIVERMAN.....	$ 42.04	29.73

CARP0107-007 09/01/2017

FRANKLIN COUNTY (Erving, Orange, North Orange, and Warwick)

	Rates	Fringes
CARPENTER.....	$ 39.28	27.90

CARP0108-008 09/04/2017

BERKSHIRE

	Rates	Fringes
CARPENTER.....	$ 35.56	23.76

CARP0108-010 09/04/2017

HAMPDEN; HAMPSHIRE; AND FRANKLIN (Remainder of County)

	Rates	Fringes
CARPENTER.....	$ 35.56	23.76

CARP1121-001 10/01/2017

	Rates	Fringes
MILLWRIGHT.....	$ 39.52	30.85

ELEC0007-002 12/31/2017

HAMPDEN (Except Chester & Holyoke); HAMPSHIRE (Belchertown, Ware)

	Rates	Fringes
ELECTRICIAN.....	$ 40.51	22.02

ELEC0007-003 12/31/2017

BERKSHIRE; FRANKLIN; HAMPDEN (Chester, Holyoke); HAMPSHIRE
(Except Belchertown, Ware)

	Rates	Fringes
ELECTRICIAN	$ 40.51	22.02

ENGI0098-007 12/01/2016

	Rates	Fringes
Power equipment operators:		
Group 1	$ 33.68	23.96+A
Group 2	$ 33.37	23.96+A
Group 3	$ 33.15	23.96+A
Group 4	$ 32.54	23.96+A
Group 5	$ 29.92	23.96+A
Group 6	$ 28.80	23.96+A
Group 7	$ 26.86	23.96+A
Group 8	$ 305.95	23.96+A
Group 9	$ 230.69	23.96+A
Group 10	$ 35.17	23.96+A
Group 11	$ 38.18	23.96+A
Group 12	$ 39.68	23.96+A
Group 13	$ 40.68	23.96+A
Group 14	$ 41.68	23.96+A
Group 15	$ 43.18	23.96+A

HAZARDOUS WASTE PREMIUM $2.00

FOOTNOTE FOR POWER EQUIPMENT OPERATORS:
Group 8 and Group 9 are per day wages.
A. Paid Holidays: New year's Day, Washington's Birthday, Memorial Day, Independence Day, Labor Day, Columbus Day, Veterans Day, Thanksgiving Day and Christmas Day

POWER EQUIPMENT OPERATORS CLASSIFICATIONS
Group 1: Shovels; crawlers and truck cranes including all tower; self-propelled hydraulic cranes 10 tons and over; draglines; clam shells; cableways; shaft hoists; mucking machines derricks; backhoes; bulldozers; gradalls; elevating graders; pile drivers; concrete pavers; trenching machines; front end loaders- 5 1/2 cu yds and over; dual drum paver; automatic grader-excavator(C.M.I. or equal); scrapers towing pan or wagon; tandem dozers or push cats(2 units in tandem); shotcrete machine; tunnel boring machine; combination backhoe/loader 3/4 cu yd hoe or over; jet engine dryer; tree shredder; post hole digger; post hole hammer; post extractor; truck mounted concrete pump with boom; roto-mill; Grader; Horizontal Drilling Machine; John Henry Rock Drill and similar equipment.
Group 2: Rotary drill with mounted compressor; compressor house (3 to 6 compressors); rock and earth boring machines (excluding McCarthy and similar drills); front end loaders 4 cu yds to 5 1/2 cu yds); forklifts-7 ft lift and over 3 ton capacity; scraper 21 yds and over (struck load); sonic hammer console; reclaimers road planer/milling machine; cal

tracks; ballast regulators; rail anchor machines; switch tampers, asphalt pavers; mechanic; welder and transfer machine.

Group 3: Combination backhoe/loader up to 3/4 cu yd; scrapers up to 21 cu yd (struck load, self propelled or tractor drawn); tireman; front end loaders up to 4 yds; well drillers; engineer or fireman on high pressure boiler; self-loading batch plant; well point operators electric pumps used in well point system; pumps, 16 inches and over (total discharge); compressor, one or two 900 cu ft and over; powered grease truck; tunnel locomotives and dingys; grout pumps; hydraulic jacks; boom truck; hydraulic cranes-up to 10 ton.

Group 4: Asphalt rollers; self-powered rollers and compactors; tractor without blade drawing sheepsfoot roller; rubber tire roller; vibratory roller or other type of compactors including machines for pulverizing and aerating soil; york rake.

Group 5: Hoists; conveyors; power pavement breakers; self-powered concrete pavement finishing machines; two bag mixers with skip; McCarthy and similar drills; batch plants (not self loading); bulk cement plants; self-propelled material spreaders; three or more 10 KW light plants; 30 KW or more generators; power broom.

Group 6: Compressor (one or two) 315 cu ft to 900 cu ft; pumps 4 inches to 16 inches (total discharge).

Group 7: Compressors up to 315 cu ft; small mixers with skip; pumps up to 4 inches; power heaters; oiler; A-frame trucks; forklifts-up to 7 ft. lift and up to 3 ton capacity; hydro broom; stud welder.

Group 8: Truck crane crews
Group 9: Oiler
Group 10: Master Mechanic
Group 11: Boom lengths over 150 feet including jib
Group 12: Boom lengths over 200 feet including jib
Group 13: Boom lengths over 250 feet including jib
Group 14: Boom lengths over 300 feet including jib
Group 15: Boom lengths over 350 feet including jib

IRON0007-014 09/16/2017

BERKSHIRE (Becket, East Otis, Hinsdale, Monterey, New Marlboro, North Otis, Otis, Peru, Sandisfield, Savoy, Sheffield, Washington, Windsor); FRANKLIN; HAMPDEN; HAMPSHIRE

	Rates	Fringes
IRONWORKER.....	$ 32.49	28.67

IRON0012-003 05/01/2017

BERKSHIRE (Lee)

	Rates	Fringes
IRONWORKER.....	$ 30.50	23.84

IRON0012-004 05/01/2017

Group 2	$ 31.25	20.18
Group 3	$ 31.75	20.18
Group 4	$ 32.00	20.18
Group 5	$ 21.50	20.18
Group 6	$ 31.00	20.18

LABORERS CLASSIFICATIONS

Group 1: Carpenter tenders, cement finisher tenders, laborers, wrecking laborers

Group 2: Asphalt rakers, fence and guard rail erectors, laser beam operator, mason tender, pipelayer, pneumatic drill operator, pneumatic tool operator, wagon drill operator

Group 3: Air track operator, block pavers, rammers, curb setters

Group 4: Blasters, powdermen

Group 5: Flaggers

Group 6: Asbestos abatement, toxic and Hazardous waste laborers

---

* LABO0473-006 06/01/2018

BERKSHIRE; HAMPSHIRE COUNTIES (the towns of Chesterfield, Cummington, Goshen, Middlefield, Plainfield, and Worthington only)

	Rates	Fringes
Laborers:		
Group 1	$ 27.58	22.29
Group 2	$ 27.83	22.29
Group 3	$ 28.33	22.29
Group 4	$ 28.58	22.29
Group 5	$ 21.50	22.29
Group 6	$ 28.58	22.29

LABORERS CLASSIFICATIONS

Group 1: Carpenter tenders, cement finisher tenders, laborers, wrecking laborers

Group 2: Asphalt rakers, fence and guard rail erectors, laser beam operator, mason tender, pipelayer, pneumatic drill operator, pneumatic tool operator, wagon drill operator

Group 3: Air track operator, block pavers, rammers, curb setters

Group 4: Blasters, powdermen

Group 5: Flaggers

Group 6: Asbestos abatement, toxic and Hazardous waste laborers

---

* LABO1421-002 06/01/2018

	Rates	Fringes
Laborers:		
Group 1	$ 38.15	24.10
Group 2	$ 38.90	24.10
Group 3	$ 39.15	24.10
Group 4	$ 34.15	24.10
Group 5	$ 37.25	24.10
Group 6	$ 38.15	24.10

Group 1: Adzeman, Wrecking Laborer.
Group 2: Burners, Jackhammers.
Group 3: Small Backhoes, Loaders on tracks, Bobcat Type Loaders, Hydraulic "Brock" Type Hammer Operators, Concrete Cutting Saws.
Group 4: Yardman (Salvage Yard Only).
Group 5: Yardman, Burners, Sawyers.
Group 6: Asbestos, Lead Paint, Toxic and Hazardous Waste.

PAIN0035-010 01/01/2018

	Rates	Fringes
Painters:		
NEW CONSTRUCTION:		
Brush, Taper	$ 31.63	25.00
Spray, Sandblast	$ 33.03	25.00
REPAINT:		
Bridge	$ 49.66	28.90
Brush, Taper	$ 28.95	25.00
Spray, Sandblast	$ 30.35	25.00

PLUM0004-003 03/01/2018

FRANKLIN (Orange)

	Rates	Fringes
Plumber and Steamfitter	$ 43.96	25.61

PLUM0104-004 03/17/2018

BERKSHIRE (Becket, Otis, Sandisfield); FRANKLIN (Except Monroe, Rowe, and the Western part of Charlemont); HAMPDEN; HAMPSHIRE

	Rates	Fringes
Plumbers and Pipefitters	$ 39.51	25.10+a

FOOTNOTE:
A. Two paid holidays, Independence Day and Labor Day, provided the employee has been employed seven days prior to the holiday by the same employer

BERKSHIRE (Remainder of County)

	Rates	Fringes
Ironworkers:		
Sheeter	$ 30.75	23.84
Structural, Ornamental, Reinforcing, Fence Erector, Machinery Mover, Rigger, Rodman, Stone Derrickman	$ 30.50	23.84

---

* LABO0022-002 06/01/2018

FRANKLIN (Orange, Warwick)

	Rates	Fringes
Laborers:		
GROUP 1	$ 33.25	22.92
GROUP 2	$ 33.50	22.92
GROUP 3	$ 34.00	22.92
GROUP 4	$ 34.25	22.92
GROUP 5	$ 34.00	22.92
GROUP 6	$ 34.25	22.92

LABORERS CLASSIFICATIONS

GROUP 1: Laborers; carpenter tenders; cement finisher tenders, plasterer tenders

GROUP 2: Asphalt raker; fence and guard rail erector; laser beam operator; mason tenmder; pipelayer; pneumatic drill operator; pneumatic tool operator; wagon drill operatorm jackhammer operator, pavement breaker, carbide core drilling machine, chain saw operator, barco type jumping tampers, concrete pump, motorized mortar miner, ride-on motorized buggy

GROUP 3: Air track operator; block paver; rammer; curb setter, hydraulic and similar self-powered drills

GROUP 4: Blaster; powderman

GROUP 5: Precast floor and roof, plank erector

GROUP 6: Asbestos Abatement, Toxic and Hazardous waste laborers

---

* LABO0473-005 06/01/2018

FRANKLIN (Except Orange and Warrick); HAMPDEN and HAMPSHIRE COUNTIES (with the exception of Chesterfield, Cummington, Goshen, Middlefield, Plainfield, and Worthington)

	Rates	Fringes
Laborers:		
Group 1	$ 31.00	20.18

PLUM0104-009 03/17/2018

BERKSHIRE (Except Otis, Becket, Sandisfield); FRANKLIN (Monroe, Rowe and the Western part of Charlemont)

	Rates	Fringes
Plumber and Steamfitter	$ 38.58	25.10+a

FOOTNOTE FOR PLUMBERS & STEAMFITTERS:
A. Paid holidays: Independence Day and Labor Day, provided the employee has been employed seven days prior to the holiday by the same employer.

TEAM0379-001 12/01/2017

	Rates	Fringes
Truck drivers:		
Group 1	$ 32.48	24.27+A+B
Group 2	$ 32.65	24.27+A+B
Group 3	$ 32.72	24.27+A+B
Group 4	$ 32.84	24.27+A+B
Group 5	$ 32.94	24.27+A+B
Group 6	$ 33.23	24.27+A+B
Group 7	$ 33.52	24.27+A+B

POWER TRUCKS $.25 DIFFERENTIAL BY AXLE
TUNNEL WORK (UNDERGROUND ONLY) $.40 DIFFERENTIAL BY AXLE
HAZARDOUS MATERIALS (IN HOT ZONE ONLY) $2.00 PREMIUM

TRUCK DRIVERS CLASSIFICATIONS

Group 1: Station wagons; panel trucks; and pickup trucks

Group 2: Two axle equipment; & forklift operator

Group 3: Three axle equipment and tireman

Group 4: Four and Five Axle equipment

Group 5: Specialized earth moving equipment under 35 tons other than conventional type trucks; low bed; vachual; mechanics, paving restoration equipment

Group 6: Specialized earth moving equipment over 35 tons

Group 7: Trailers for earth moving equipment (double hookup)

FOOTNOTES:

A. PAID HOLIDAYS: New Year's Day, Washington's Birthday, Memorial Day, Independence Day, Labor Day, Patriot's Day, Columbus Day, Veteran's Day, Thanksgiving Day and Christmas Day

B. PAID VACATION: Employees with 4 months to 1 year of service receive 1/2 day's pay per month; 1 week vacation for 1 - 5 years of service; 2 weeks vacation for 5 - 10 years of service; and 3 weeks vacation for more than 10 years of service

---

WELDERS - Receive rate prescribed for craft performing operation to which welding is incidental.

==========

Note: Executive Order (EO) 13706, Establishing Paid Sick Leave for Federal Contractors applies to all contracts subject to the Davis-Bacon Act for which the contract is awarded (and any solicitation was issued) on or after January 1, 2017. If this contract is covered by the EO, the contractor must provide employees with 1 hour of paid sick leave for every 30 hours they work, up to 56 hours of paid sick leave each year. Employees must be permitted to use paid sick leave for their own illness, injury or other health-related needs, including preventive care; to assist a family member (or person who is like family to the employee) who is ill, injured, or has other health-related needs, including preventive care; or for reasons resulting from, or to assist a family member (or person who is like family to the employee) who is a victim of, domestic violence, sexual assault, or stalking. Additional information on contractor requirements and worker protections under the EO is available at www.dol.gov/whd/govcontracts.

Unlisted classifications needed for work not included within the scope of the classifications listed may be added after award only as provided in the labor standards contract clauses (29CFR 5.5 (a) (1) (ii)).

The body of each wage determination lists the classification and wage rates that have been found to be prevailing for the cited type(s) of construction in the area covered by the wage determination. The classifications are listed in alphabetical order of "identifiers" that indicate whether the particular rate is a union rate (current union negotiated rate for local), a survey rate (weighted average rate) or a union average rate (weighted union average rate).

Union Rate Identifiers

A four letter classification abbreviation identifier enclosed in dotted lines beginning with characters other than "SU" or "UAVG" denotes that the union classification and rate were prevailing for that classification in the survey. Example: PLUM0198-005 07/01/2014. PLUM is an abbreviation identifier of the union which prevailed in the survey for this classification, which in this example would be Plumbers. 0198 indicates the local union number or district council number where applicable, i.e., Plumbers Local 0198. The next number,

005 in the example, is an internal number used in processing the wage determination. 07/01/2014 is the effective date of the most current negotiated rate, which in this example is July 1, 2014.

Union prevailing wage rates are updated to reflect all rate changes in the collective bargaining agreement (CBA) governing this classification and rate.

Survey Rate Identifiers

Classifications listed under the "SU" identifier indicate that no one rate prevailed for this classification in the survey and the published rate is derived by computing a weighted average rate based on all the rates reported in the survey for that classification. As this weighted average rate includes all rates reported in the survey, it may include both union and non-union rates. Example: SULA2012-007 5/13/2014. SU indicates the rates are survey rates based on a weighted average calculation of rates and are not majority rates. LA indicates the State of Louisiana. 2012 is the year of survey on which these classifications and rates are based. The next number, 007 in the example, is an internal number used in producing the wage determination. 5/13/2014 indicates the survey completion date for the classifications and rates under that identifier.

Survey wage rates are not updated and remain in effect until a new survey is conducted.

Union Average Rate Identifiers

Classification(s) listed under the UAVG identifier indicate that no single majority rate prevailed for those classifications; however, 100% of the data reported for the classifications was union data. EXAMPLE: UAVG-OH-0010 08/29/2014. UAVG indicates that the rate is a weighted union average rate. OH indicates the state. The next number, 0010 in the example, is an internal number used in producing the wage determination. 08/29/2014 indicates the survey completion date for the classifications and rates under that identifier.

A UAVG rate will be updated once a year, usually in January of each year, to reflect a weighted average of the current negotiated/CBA rate of the union locals from which the rate is based.

WAGE DETERMINATION APPEALS PROCESS

1.) Has there been an initial decision in the matter? This can be:

* an existing published wage determination
* a survey underlying a wage determination
* a Wage and Hour Division letter setting forth a position on a wage determination matter
* a conformance (additional classification and rate) ruling

On survey related matters, initial contact, including requests for summaries of surveys, should be with the Wage and Hour Regional Office for the area in which the survey was conducted because those Regional Offices have responsibility for the Davis-Bacon survey program. If the response from this initial contact is not satisfactory, then the process described in 2.) and 3.) should be followed.

With regard to any other matter not yet ripe for the formal process described here, initial contact should be with the Branch of Construction Wage Determinations. Write to:

Branch of Construction Wage Determinations
Wage and Hour Division
U.S. Department of Labor
200 Constitution Avenue, N.W.
Washington, DC 20210

2.) If the answer to the question in 1.) is yes, then an interested party (those affected by the action) can request review and reconsideration from the Wage and Hour Administrator (See 29 CFR Part 1.8 and 29 CFR Part 7). Write to:

Wage and Hour Administrator
U.S. Department of Labor
200 Constitution Avenue, N.W.
Washington, DC 20210

The request should be accompanied by a full statement of the interested party's position and by any information (wage payment data, project description, area practice material, etc.) that the requestor considers relevant to the issue.

3.) If the decision of the Administrator is not favorable, an interested party may appeal directly to the Administrative Review Board (formerly the Wage Appeals Board). Write to:

Administrative Review Board
U.S. Department of Labor
200 Constitution Avenue, N.W.
Washington, DC 20210

4.) All decisions by the Administrative Review Board are final.

==========

END OF GENERAL DECISION

APPENDIX D

CDBG GENERAL CONDITIONS

CDBG GENERAL CONDITIONS

1. Funding Source 2
2. Contract Plans and Specifications 2
3. Additional Instructions and Detail Drawings 2
4. Shop or Setting Drawings 2
5. Materials, Services and Facilities 2
6. Contractor's Title to Materials 3
7. Title to Work 3
8. Inspection and Testing of Materials 3
9. Express Warranty 3
10. Maintenance and Guarantee 3
11. "Or Equal" Clause 3
12. Survey's Permits and Regulations 4
13. Contractor's Obligations 4
14. Weather Conditions 4
15. Protection of Work and Property - Emergency 4
16. Inspection 5
17. Reports, Records and Data 5
18. Superintendence by Contractor 5
19. Changes in Work 5
20. Time for Completion and Liquidated Damages 5
21. Correction of Work 6
22. Subsurface Conditions Found Different 7
23. Right of Owner to Terminate Contract 7
24. Payments to Contractor 8
25. Indemnification 8
26. Acceptance of Final Payment Constitutes Release 8
27. Insurance 8
    (a) Compensation Insurance: 8
    (b) Contractor's Public Liability and Property Damage Insurance and Vehicle Liability Insurance: 8
    (c) Subcontractor's Public Liability and Property Damage Insurance and Vehicle Liability Insurance: 9
    (d) Builder's Risk Insurance (Fire and Extended Coverage): 9
    (e) Proof of Insurance: 9
    (f) Contractor's and subcontractor's Public Liability, Vehicle Liability and Property Damage Insurance 9
28. Flood Disaster Protection 9
29. Contract Security 9
30. Assignments 9
31. Architect/Engineer's Authority 10
32. Notice and Service Thereof 10
33. Subcontract 10
34. Interest of Member of or Delegate to Congress 10
35. Other Prohibited Interests 10
36. Suspension of Work 11
37. Access to Records 11
38. Age Discrimination Act of 1975 (for contracts over $2,000) 11
39. Non-Discrimination 11
40. Termination of Contract 12
41. Non Federal Labor-Standards Provisions 12
42. Schedule of Salaries and Wages 13
43. Labor Provisions 13
44. Environmental Requirements 13
45. Historic Preservation 14
46. Compliance with Air and Water Acts (for contracts exceeding $100,000) 14
47. Special Conditions Pertaining to Hazards, Safety Standards and Accident Prevention 14
48. Compliance with the Massachusetts Community Development Block Grant Program Agreement 15
49. Interest of Contractor and Employees 15
50. Severability 15
51. Availability of Funds 15
52. Confidentiality 15

GENERAL CONDITIONS

1. Funding Source

The project to be constructed and pursuant to this Contract will be financed with assistance from the Massachusetts Community Development Block Grant Program and is subject to all applicable Federal, State and local regulations.

2. Contract Plans and Specifications

All plans, specifications and addenda, hereinafter enumerated or referenced in this contract, shall form part of this Contract and the provisions thereof shall be as binding upon the parties hereto as if they were herein set fully forth. The table of contents, titles, headings, running headlines and marginal notes contained herein and in said documents are solely to facilitate reference to various provisions of the Contract Documents and in no way affect, limit or cast light on the interpretation of the provisions to which they refer.

3. Additional Instructions and Detail Drawings

The Contractor will be furnished additional instructions and detail drawings as necessary to carry out the work included in the contract. The additional drawings and instructions thus supplied to the Contractor will coordinate with the Contract Documents and will be so prepared that they can be reasonably interpreted as part thereof. The Contractor shall carry out the work in accordance with the additional detail drawings and instructions. The Contractor and the Architect/Engineer will prepare jointly: (a) a schedule, fixing the dates at which special detail drawings will be required, such drawings, if any, to be furnished by the Architect/Engineer in accordance with said schedule, and (b) a schedule fixing the respective dates for the submission of shop drawings, the beginning of manufacture, testing and installation of materials, supplies and equipment, and the completion of the various parts of the work; each such schedule to be subject to change from time to time in accordance with the progress of the work.

4. Shop or Setting Drawings

The Contractor shall submit promptly to the Architect/Engineer two copies of each shop or setting drawing prepared in accordance with the schedule predetermined as aforesaid. After examination of such drawings by the Architect/Engineer and the return thereof, the Contractor shall make such corrections to the drawings as have been indicated and shall furnish the Architect/Engineer with two corrected copies. If requested by the Architect/Engineer, the Contractor must furnish additional copies. Regardless of corrections made in or approval given to such drawings by the Architect/Engineer, the Contractor will nevertheless be responsible for the accuracy of such drawings and for their conformity to the plans and specifications, unless he notifies the Architect/Engineer in writing of any deviations at the time he furnishes such drawings.

5. Materials, Services and Facilities

(a) It is understood that except as otherwise specifically stated in the Contract Documents, the Contractor shall provide and pay for all materials, labor, tools, equipment, water, light, power, transportation, superintendence, temporary construction of every nature and all other services and facilities of every nature whatsoever necessary to execute, complete and deliver the work within the specified time.

(b) Any work necessary to be performed after regular working hours, on Sunday or Legal Holidays, shall be performed without additional expense to the Owner.

6. Contractor's Title to Materials

No materials or supplies for the work shall be purchased by the Contractor or by any Subcontractor subject to any chattel mortgage or under a conditional sale contract or other agreement by which an interest is retained by the seller. The Contractor warrants that he has good title to all materials and supplies used by him in the work, free from all liens, claims or encumbrances.

7. Title to Work

The title to all work completed and in the course of construction and of all material on account of which any payment has been made shall be in the Owner.

8. Inspection and Testing of Materials

(a) All materials and equipment used in the construction of the project shall be subject to adequate inspection and testing in accordance with accepted standards. The laboratory or inspection agency shall be selected by the Owner. The Owner will pay for all laboratory inspection service direct, and not as a part of the Contract.

(b) Materials of construction, particularly those upon which the strength and durability of the structure may depend, shall be subject to inspection and testing to establish conformance with specifications and suitability for uses intended.

9. Express Warranty

The Contractor guarantees to Owner that all materials incorporated into the work will be new unless otherwise specified or agreed. Contractor also guarantees that all work will be done in a workmanlike manner, free from defects, and in conformance with any specifications mentioned in this contract.

10. Maintenance and Guarantee

The Contractor hereby guarantees that the entire work constructed by him under the contract will meet fully all requirements thereof as to quality of workmanship and of materials furnished by him. The Contractor hereby agrees to make at his/her own expense any repairs or replacements made necessary by defects in materials or workmanship supplied to him that become evident within one (1) year after the date of the final payment, and to restore to full compliance with the requirements set forth herein for any part of the work constructed hereunder, which during said one (1) year period is found to be deficient with the respect to any provisions of the specifications. The Contractor also agrees to hold the Owner harmless from claims of any kind arising from damage due to said defects. The Contractor shall make all repairs and replacements promptly upon receipt of written orders for same from the Owner. If the Contractor fails to make the repairs and replacements promptly, the Owner may do the work and the Contractor shall be liable to the owner for the cost thereof.

11. "Or Equal" Clause

Whenever a material, article or piece of equipment is identified on the plans or in the specifications by reference to manufacturers' or vendors' names, trade names, catalogue numbers, etc., it is intended merely to establish a standard; and, any materials, article or equipment of other manufacturers and vendors which will perform adequately the duties imposed by the general design will be considered equally acceptable provided the material, article or equipment so proposed is, in the opinion of the Architect/Engineer, of equal substance and function. It shall not be purchased or installed by the Contractor without the Architect/Engineer's written approval.

12. Survey's Permits and Regulations

Unless otherwise expressly provided for in the specifications, the Owner will furnish to the Contractor all surveys necessary for the execution of the work.

The Contractor shall procure and pay for all permits, licenses and approvals necessary for the execution of his contract, and shall comply with the provisions of 24 CFR 85.36(h)(1)-(3) and Massachusetts General Laws with respect to bonding or other insurance requirements.

The Contractor shall comply with all laws, ordinances, rules, orders and regulations relating to performance of the work, the protection of adjacent property and the maintenance of passageways, guard fences or other protective facilities.

13. Contractor's Obligations

The Contractor shall and will, in good workmanlike manner, do and perform all work and furnish all supplies and materials, machinery, equipment, facilities and means, except as herein otherwise expressly specified, necessary or proper to perform and complete all the work required by this Contract, within the time herein specified, in accordance with the provisions of this Contract and said specifications and in accordance with the plans and drawings covered by this Contract any and all supplemental plans and drawings, and in accordance with the directions of the Architect/Engineer as given from time to time during the progress of the work. He shall furnish, erect, maintain and remove such construction plant and such temporary works as may be required.

The contractor shall observe, comply with, and be subject to all terms, conditions, requirements and limitations of the Contract and specifications, and shall do, carry on and complete the entire work to the satisfaction of the Architect/Engineer and the Owner.

14. Weather Conditions

In the event of temporary suspension of work, or during inclement weather, or whenever the Architect/Engineer shall direct, the Contractor will, and will cause his Subcontractors to protect carefully his and their work and materials against damage or injury from the weather. If, in the opinion of the Architect/Engineer, any work or materials shall have been damaged or injured by reason of failure on the part of the Contractor or any of his Subcontractors so to protect his work, such materials shall be removed and replaced at the expense of the Contractor.

15. Protection of Work and Property - Emergency

The Contractor shall at all times safely guard the Owner's property from injury or loss in connection with this Contract. He shall at all times safely guard and protect his own work, and that of adjacent property from damage. The Contractor shall replace or make good any such damage, loss or injury unless such is caused directly by errors contained in the Contract or by the Owner, or his duly authorized representatives.

In case of an emergency which threatens loss or injury of property, and/or safety of life, the Contractor will be allowed to act, without previous instructions from the Architect/Engineer, in a diligent manner. He shall notify the Architect/Engineer immediately thereafter. Any claim for compensation by the Contractor due to such extra work shall be promptly submitted to the Architect/Engineer for approval.

Where the Contractor has not taken action but has notified the Architect/Engineer of an emergency threatening injury to persons or damage to the work or any adjoining property, he shall act as instructed or authorized by the Architect/Engineer.

The amount of reimbursement claimed by the Contractor on account of any emergency action shall be determined in the manner provided in Paragraph 21 below.

16. Inspection

The authorized representatives and agents of the Owner, the Executive Office of Communities and Development, the Commonwealth, the grantee, and the Department of Housing and Urban Development shall be permitted to inspect all work, materials, payrolls, records of personnel, invoices of materials and other relevant data and records.

17. Reports, Records and Data

The Contractor shall submit to the Owner such schedule of quantities and costs, progress schedules, payrolls, reports, estimates, records and other data as the Owner may request concerning work performed or to be performed under this Contract. All records must be retained by the Contractor for a period of seven years from completion of the work.

18. Superintendence by Contractor

At the site of the work, the Contractor shall employ a construction superintendent or foreman who shall have full authority to act for the Contractor. It is understood that such representative shall be acceptable to the Architect/Engineer and shall be one who can be continued in that capacity for the particular job involved unless he ceases to be on the Contractor's payroll.

19. Changes in Work

No changes in the work covered by the approved Contract Documents shall be made without having prior written approval of the Owner. Charges or credits for the work covered by the approved change shall be determined by one or more, or a combination of the following methods:

(a) Unit bid prices previously approved.

(b) An agreed lump sum.

(c) The actual cost of:

(1) Labor, including foremen.
(2) Materials entering permanently into the work.
(3) The ownership or rental cost of construction plant and equipment during the time of use on the extra work.
(4) Power and consumable supplies for the operation of power equipment.
(5) Insurance.
(6) Wages to be paid.

To the cost under (c) there shall be added a fixed fee to be agreed upon but not to exceed fifteen percent (15%) of the actual cost of work. The fee shall be compensation to cover the cost of supervision, overhead, bond, profit and any other general expenses.

20. Time for Completion and Liquidated Damages

It is hereby understood and mutually agreed, by and between the Contractor and the Owner, that the date of beginning and the time for completion of the work to be done hereunder are ESSENTIAL CONDITIONS of this Contract; and it is further mutually understood and agreed that the work embraced in this Contract shall be commenced on a date to be specified in the "Notice to Proceed."

The Contractor agrees that said work shall be prosecuted regularly, diligently and uninterruptedly at such rate of progress as will ensure full completion thereof within the time specified. It is expressly

understood and agreed, by and between the Contractor and the Owner, that the time for the completion of the work described herein is a reasonable time for the completion of the same, taking into consideration the average climatic range and usual industrial conditions prevailing in this locality.

If the said Contractor shall neglect, fail or refuse to complete the work within the time herein specified, or any proper extension thereof granted by the Owner, then the Contractor does hereby agree, as a partial consideration for the awarding of this Contract, to pay to the Owner the amount specified in the Contract, not as a penalty but as liquidated damages for such breach of contract as hereinafter set forth, for each and every calendar day that the Contractor shall be in default after the time stipulated in the Contract for completing the work.

The said amount of liquidated damages is fixed and agreed upon by and between the Contractor and the Owner because of the impracticability and extreme difficulty of fixing and ascertaining the actual damages the Owner would sustain in such event and said amount shall be retained from time to time by the Owner from current periodic estimates.

It is further agreed that time is of the essence of each and every portion of this Contract and of the specifications wherein a definite and certain length of time is fixed for the performance of any act whatsoever; and where under the Contract an additional time is allowed for the completion of any work, the new time limit fixed by such extension shall be of the essence of this contract. Provided, that the Contractor shall not be charged with liquidated damages or any excess cost when the owner determines that the Contractor is without fault and the Contractor's reasons for the time extension are acceptable to the Owner; provided, further, that the Contractor shall not be charged with liquidated damages or any excess cost when the delay in completion of the work is due:

(a) To any preference, priority or allocation order duly issued by the Government.

(b) To unforeseeable cause beyond the control and without the fault of negligence of the Contractor, including, but not restricted to, acts of God, or of the public enemy, acts of the Owner, acts of another Contractor in the performance of a contract with the Owner, fires, floods, epidemics, quarantine restrictions, strikes, freight embargoes and severe weather.

(c) To any delays of Subcontractors or suppliers occasioned by any of the causes specified in subsections (a) and (b) of this article.

Provided further, that the Contractor shall within ten (10) days from the beginning of such delay, unless the Owner shall grant a further period of time prior to the date of final settlement of the Contract, notify the Owner, in writing, of the causes of the delay, who shall ascertain the facts and extent of the delay and notify the Contractor within a reasonable time of its decision in the matter.

21. Correction of Work

All work, all materials, whether incorporated in the work or not, all processes of manufacture, and all methods of construction shall be at all times and places subject to the inspection of the Architect/Engineer who shall be the final judge of the quality and suitability of the work, materials, processes of manufacture and methods of construction for the purposes for which they are used. Should they fail to meet his approval they shall be forthwith reconstructed, made good, replaced and/or corrected, as the case may be, by the Contractor at his own expense. Rejected materials shall immediately be removed from the site. If, in the opinion of the Architect/Engineer, it is undesirable to replace any defective or damaged materials or to reconstruct or correct any portion of the work injured or not performed in accordance with the Contract Documents, the compensation to be paid to the Contractor hereunder shall be reduced by such amount as in the judgment of the Architect/Engineer shall be equitable.

22. Subsurface Conditions Found Different

Should the Contractor encounter subsurface and/or latent conditions at the site materially differing from those shown on the plans or indicated in the specifications, he shall immediately give notice to the Architect/Engineer of such conditions before they are disturbed. The Architect/Engineer will thereupon promptly investigate the conditions, and if he finds that they materially differ from those shown on the plans or indicated in the specifications, he will at once make such changes in the plans and/or specifications as he may find necessary, any increase or decrease of cost resulting from such changes to be adjusted in the manner provided in Paragraph 21 of the General Conditions.

23. Right of Owner to Terminate Contract

The Owner may terminate this Contract by providing the Contractor and the Surety with 10 days written notice specifying the reasons for termination as outlined below:

(a) Violation of any of the provisions of this Contract by the Contractor or any of his/her subcontractors.

(b) A determination by the Owner that the Contractor has engaged in fraud, waste, mismanagement, misuse of funds, or criminal activity with any funds provided by this Contract.

(c) Failure of the Contractor, for any reason, to fulfill in a timely and proper manner its obligations under this Contract including compliance with applicable federal, state or local laws or regulations, and such procedures or guidelines as may be established for the Massachusetts Community Development Block Grant by EOCD;

(d) Cancellation, revocation, suspension or termination by HUD of the grant agreements to the Commonwealth under which the Owner's Community Development Block Grant Agreement is made, or the portion thereof funding this contract.

In the event of any such termination, the Surety shall have the right to take over and perform the Contract; provided, however, that if the Surety does not commence performance within ten (10) days from the date of the mailing to such Surety of notice of termination, the Owner may take over the work and prosecute the same to completion at the expense of the Contractor and the Contractor and his Surety shall be liable to the Owner for any excess cost occasioned by the Owner thereby, and in such event the Owner may take possession of and utilize in completing the work, such materials, appliances and plant as may be on the site of the work and necessary therefore.

If the Owner determines that a continuation of work on the project would endanger the life, health, or safety of those working or living at or near the project site, or that immediate action is necessary to protect public funds and/or property, the Owner may suspend work or terminate this agreement by providing notice to the Contractor in the form of telegram, mailgram, hand-carried letter, or other appropriate written means.

24. Payments to Contractor

(a) Not later than the <u>tenth day</u> of each calendar month the Owner shall make a progress payment to the Contractor on the basis of a duly certified and approved estimate of the work performed during the preceding calendar month under this Contract, but to insure the proper performance of this Contract, the Owner shall retain ten percent (10%) of the amount of each estimate until final completion and acceptance of all work covered by this Contract; <u>provided</u>, that the Contractor shall submit his estimate not later than the <u>first day</u> of the month; <u>provided</u>, <u>further</u>, that on completion and acceptance of each separate building, public work or other division of the Contract, on which the price is stated separately in the Contract, payment may be made in full, including retained percentages thereon, less authorized deductions.

(b) In preparing estimates the material delivered on the site and preparatory work done may be taken into consideration.

25. Indemnification

The Contractor shall comply with the requirements of all applicable laws, rules and regulations in connection with the services of the Contractor, and shall exonerate, indemnify and hold harmless the Owner's officers, agents, and all employees from and against them, and local taxes or contributions imposed or required under the Social Security, Worker's Compensation, and Income Tax laws. Further, the Contractor shall exonerate, indemnify and hold harmless the Owner with respect to any damages, expenses or claims arising from or in connection with any of the work performed or to be performed under this Contract. This shall not be construed as a limitation of the Contractor's liability under the Contract or as otherwise provided by law.

26. Acceptance of Final Payment Constitutes Release

The acceptance by the Contractor of final payment shall be and shall operate as a release to the Owner of all claims and all liability to the Contractor. No payment, however, final or otherwise, shall operate to release the Contractor or his Sureties from any obligations under this Contract or the performance and payment bond.

27. Insurance

The Contractor shall not commence work under this Contract until he has obtained all the insurance required under this paragraph and such insurance has been approved by the Owner, nor shall the Contractor allow any Subcontractor to commence work on this subcontract until the insurance required of the subcontractor has been so obtained and approved.

(a) Workmen's Compensation Insurance:

The Contractor shall procure and shall maintain during the life of this Contract Workmen's Compensation Insurance as required by applicable State or local law for all of his employees and, in case of any such work sublet, the Contractor shall require the Subcontractor similarly to provide Workmen's Compensation Insurance for all of the latter's employees unless such employees are covered by the protection afforded by the Contractor's Workmen's Compensation Insurance. MGL C.152 sec.25C Insurance for workers compensation. (CANNOT BE LESS THAN $100,000 OF INSURANCE) All contracts for public work must meet the insurance requirements of this chapter.

(b) Contractor's Public Liability and Property Damage Insurance and Vehicle Liability Insurance:

The Contractor shall procure and shall maintain during the life of this Contract Contractor's Public Liability Insurance, Contractor's Property Damage Insurance and Vehicle Liability Insurance in the amounts specified below.

(c) Subcontractor's Public Liability and Property Damage Insurance and Vehicle Liability Insurance:

The Contractor shall either (1) require each of his Subcontractors to procure and to maintain during the life of his subcontract, Subcontractor's Public Liability and Property Damage Insurance and Vehicle Liability Insurance of the type and in the amounts specified below, or (2) ensure the activities of his policy, specified in subparagraph (b) hereof.

(d) Builder's Risk Insurance (Fire and Extended Coverage):

Until the project is completed and accepted by the Owner, the Contractor is required to maintain Builder's Risk Insurance (fire and extended coverage) on a 100 percent completed value basis on the insurable portion of the project for the benefit of the Owner, the Contractor, and Subcontractors as their interests may appear.

(e) Proof of Insurance:

The Contractor shall furnish the Owner with certificates showing the type, amount, class of operations covered, effective dates and date of expiration of policies. Such certificates shall also contain substantially the following statement: "The insurance covered by this certificate will not be canceled or materially altered, except after ten (10) days written notice has been received by the Owner."

(f) Contractor's & subcontractor's Public Liability, Vehicle Liability & Property Damage Insurance

The Contractor's Public liability Insurance and Vehicle Liability Insurance shall be in an amount not less than $10,000 for injuries, including accidental death, to any one person, and subject to the same limit for each person, in an amount not less than $300,000 on account of one accident, and Contractor's Property Damage Insurance in an amount of not less than $100,000.

28. Flood Disaster Protection

The owner of land subject to acquisition or improvement under this contract, and its successors or assigns, are hereby obligated to obtain and maintain, during ownership of the land which is the subject of this contract, such flood insurance as is required with respect to financial assistance for acquisition or construction purposes under section 102 (a) of the Flood Disaster protection Act of 1973. This obligation is binding notwithstanding the fact that construction on the land which is the subject of this contract is not itself funded out of assistance provided under the Housing and Community Development Act of 1974, as amended.

29. Contract Security

The Contractor shall furnish a performance bond in an amount at least equal to one hundred percent (100%) of the contract prices as security for the faithful performance of this Contract and also a payment bond in an amount not less than one hundred percent (100%) of the contract price or in a penal sum not less than that prescribed by State or local law, as security for the payment of all persons performing labor on the project under this Contract and furnishing materials in connection with this Contract.

30. Assignments

The Contractor shall not assign or subcontract the whole or any part of this Contract or any monies due or to become due hereunder without written consent of the Owner. In case the Contractor assigns all or any part of any monies due or to become due under this Contract, the instrument of assignment shall contain a clause substantially to the effect that it is agreed that the right of the assignee in and to any monies due or to become due to the Contractor shall be subject to prior claims of all persons, firms and corporations of services rendered or materials supplied for the performance of the work called for in this Contract.

31. Architect/Engineer's Authority

The Architect/Engineer shall give all orders and directions contemplated under this Contract and specifications relative to the execution of the work. The Architect/Engineer shall determine the amount, quality, acceptability and fitness of the several kinds of work and materials which are to be paid for under this Contract and shall decide all questions which may arise in relation to said work and the

construction thereof. The Architect/Engineer's estimates and decisions shall be final and conclusive, except as herein otherwise expressly provided. In case any question shall arise between the parties hereto relative to said Contract and specifications, the determination or decision of the Architect/Engineer shall be a condition precedent to the right of the Contractor to receive any money or payment for work under this Contract affected in any manner or to any extent by such question.

The Architect/Engineer shall decide the meaning and intent of any portion of the specifications and of any plans or drawings where the same may be found obscure or be in dispute.

32. Notice and Service Thereof

Any notice to any Contractor from the Owner relative to any part of this Contract shall be in writing and considered delivered and the service thereof completed, when said notice is posted, by certified or registered mail, to the said Contractor at his last given address, or delivered in person to the said Contractor or his authorized representative on the work.

33. Subcontract

The Contractor will insert in any subcontracts the Federal Labor Standards Provisions contained herein and such other clauses as the Department of Housing and Urban Development may, by instructions require, and also a clause requiring the subcontractors to include these clauses in any lower tier subcontracts which they may enter into, together with a clause requiring this insertion in any further subcontracts that may in turn be made.

34. Interest of Member of or Delegate to Congress

No member of or delegate to Congress, or Resident Commissioner, shall be admitted to any share or part of this Contract or to any benefit that may arise therefrom, but this provision shall not be construed to extend to this Contract if made with a corporation for its general benefit.

35. Other Prohibited Interests

No official of the City/Town who is authorized in such capacity and on behalf of the City/Town to negotiate, make, accept or approve, or to take part in negotiating, making, accepting or approving any architectural, engineering, inspection, construction or material supply contract or any subcontract in connection with the construction of the project, shall become directly or indirectly interested personally in this Contract or in any part hereof. No officer, employee, architect, attorney, engineer or inspector of or for the City/Town who is authorized in such capacity and on behalf of the City/Town to exercise any legislative, executive, supervisory or other similar functions in connection with the construction of the project, shall become directly or indirectly interested personally in this Contract or in any part thereof, any material supply contract, subcontract, insurance contract or any other contract pertaining to the project.

36. Suspension of Work

Should the Owner be prevented or enjoined from proceeding with work either before or after the start of construction by reason of any litigation or other reason beyond the control of the Owner, the Contractor shall not be entitled to make or assert claim for damage by reason of said delay; but time for completion of the work will be extended to such reasonable time as the Owner may determine will compensate for time lost by such delay with such determination to be set forth in writing.

37. Access to Records

The Contractor shall maintain accounts and records, including personnel, property and financial records, adequate to identify and account for all costs pertaining to the Contract and such other records as may be deemed necessary by the Municipality to assure proper accounting for all project funds, both CDBG and non-CDBG shares. These records will be made available for audit purposes to the Owner or any authorized representative, and will be retained for seven years after final Mass. CDBG audit.

38. Age Discrimination Act of 1975 (for contracts over $2,000)

No person in the United States shall, on the basis of age, be excluded from participation in, be denied the benefits of, or be subjected to discrimination from receiving Federal financial assistance.

The Contractor shall comply with the provisions of the Age Discrimination Act of 1975 (42 U.S.C. 6101 et seq.). The Age Discrimination in Employment Act prohibits arbitrary age discrimination in employment.

39. Non-Discrimination

The Contractor shall adhere to the requirements set forth in Title VI of the Civil Rights Act of 1964 (Public Law 88-352), and the regulations issued pursuant thereto by HUD (24 CFR Part 1); Title VIII of the Civil Rights Act of 1968 (Public Law 90-284), as amended; Section 109 of the Housing and Community Development Act of 1974, and the HUD regulations issued pursuant thereto (24 CFR 570.601); Federal Executive Order 11063, as amended by Executive Order 12259 and the HUD regulations issued pursuant thereto (24 CFR 107); Executive Order 11246 and the rules, regulations and relevant orders of the U.S. Secretary of Labor, if applicable; The Age Discrimination Act of 1975 (42 U.S.C. 6101 et seq.); Section 402 of the Veterans of the Vietnam Era Act (for projects of $10,000 or more). Section 504 of the Rehabilitation Act of 1973 (29 U.S.C. 794); Massachusetts General Laws Chapter 151B, section 1 et seq.; State Executive Order 74 as amended and revised by Executive Orders

116, 143 and 227, and MASS. CDBG regulations, procedures or guidelines; Title II of the Uniform Relocation Assistance and Real Property, Acquisition Policies Act of 1979; and MASS. CDBG guidelines, procedures, or regulations.

The Contractor shall not discriminate against any employee or applicant for employment because of race, color, religion, sex, age, handicap, or national origin. The Contractor shall take affirmative action to ensure that applicants for employment are employed, and that employees are treated during employment, without regard to their race, color, religion, sex, age, handicap, or national origin. Such action shall include, but not be limited to, the following: employment, upgrading, demotion, or transfer; recruitment or recruitment advertising; layoff or termination; rates of pay or other forms of compensation; and selection for training, including apprenticeship. The Contractor shall post in conspicuous places, available to employees and applicants for employment, notices setting forth the provision of this non-discrimination clause. The Contractor shall state in all solicitations or advertisements for employees placed by or on behalf of the Contractor, that all qualified applicants will receive consideration for employment without regard to race, color, religion, sex, age, handicap, or national origin. The Contractor shall incorporate the foregoing requirements of this paragraph in all contracts for work to be performed in this paragraph in all contracts for work to be performed in accordance with this Contract and will require all of its subcontractors to incorporate such requirements in all subcontracts for program work.

Contract subject to Federal Executive Order 11246, as amended, shall be subject to HUD Equal Employment Opportunity regulation at 24 CFR Part 130 applicable to HUD assisted construction contracts.

The Contractor shall send to each labor union or representative or workers with which they have a collective bargaining agreement or other contract or understanding, a notice advertising the said labor

union or worker's representatives of the Contractor's commitment under this subsection and shall post copies of the notice in conspicuous places available to employees and applicants for employment.

In the event of noncompliance by the Contractor with the nondiscrimination clauses of this Agreement or with any such rules, regulations, or orders of the Secretary of Labor, the Contract may be canceled, terminated or suspended in whole or in part, and the Contractor may be declared ineligible for further Government contract or federally assisted construction contract procedures authorized in Executive Order 11246, or by rules, regulations, or orders of the Secretary of Labor, as otherwise provided by law.

The Contractor shall include the provisions set forth herein in every subcontract or purchase order unless exempted by rules, regulations, or orders of the Secretary of Labor issued pursuant to section 204 of Executive Order 11246, so that such provisions will be binding upon each subcontractor or vendor. The contractor will take such actions with respect to any subcontract or purchase order as HUD or MASS. CDBG may direct as a means of enforcing such provisions, including sanctions for noncompliance: provided, however, that in the event a contractor becomes involved in, or is threatened with, litigation with a subcontractor or vendor as a result of such direction, the contractor may request the United States to enter into such litigation to protect the interest of the United States.

40. Termination of Contract

The Owner may suspend or terminate this Contract by providing the recipient with ten (10) days written notice for reasons outlined as follows:

1. Failure of the Grantee, for any reason, to fulfill in a timely and proper manner its obligations under this Contract including compliance with applicable federal, state or local laws or regulations, and such procedures or guidelines as may be established for the Massachusetts Community Development Block Grant;

2. Cancellation, revision, suspension or termination by HUD of the grant agreements to the Commonwealth under which the Owner's Community Development Block Grant Agreement is made, or the portion thereof funding this contract.

41. Non Federal Labor-Standards Provisions

The following Massachusetts Labor-Standards Provisions, including the provisions concerning maximum hours of work, minimum rates of pay, and overtime compensation, with respect to the categories and classifications of employees hereinafter mentioned are included in this Contract pursuant to the requirements of applicable State or local laws. The inclusion of such provisions shall not be construed to relieve the Contractor or any Subcontractor from the pertinent requirements of any corresponding Federal Labor-Standards Provisions of this Contract. If the minimum rates of pay set forth below are higher than the minimum rates of pay required by or set forth in the Federal Labor Standards Provisions of this Contract for corresponding classifications, the minimum rates of pay set forth below shall, for the purposes of this Contract, be the applicable minimum rates of pay for such classifications. The limitations, if any, in these Massachusetts Labor-Standards Provisions upon the hours per day, per week or per month which employees engaged on the work covered by this Contract may be required or permitted to work thereon shall not be exceeded.

42. Schedule of Salaries and Wages

The minimum wage rates and health and welfare fund contributions applicable to this Contract as determined by the Commissioner, Department of Labor and Industries, Commonwealth of Massachusetts under the provisions of the Massachusetts General Laws, Chapter 149, Sections 26 - 27D. The greater of Federal or State prevailing wages, when both are applicable, shall be paid under this contract and reported as required.

43. Labor Provisions

(a) In the employment of mechanics and apprentices, teamsters, chauffeurs and laborers by the Contractor and Subcontractors, preference shall first be given to citizens of the Commonwealth who have been residents of the Commonwealth for at least six months at the commencement of their employment, who are male veterans as defined in clause forty-third of M.G.L. c. 4, s. 7 and who are qualified to perform the work to which the employment relates; and secondly, to citizens of the Commonwealth generally who have been residents of the Commonwealth for at least six months at the commencement of their employment, and if they cannot be obtained in sufficient numbers, then to citizens of the United States, in accordance with M.G.L. c. 149, s. 26.

(b) The minimum rates of wages to be paid mechanics and apprentices, chauffeurs, teamsters and laborers shall be set forth in the schedule of rates of wages determined by the Commissioner of Labor and Industry unless the Federal rates are higher.

(c) In accordance with M.G.L. c. 149, s 34A, the Contractor shall, before commencing performance of the contract, provide by insurance for the payment of compensation and the furnishing of other benefits under M. G. L. c. 152 to all persons to be employed under the contract, and the Contractor shall continue such insurance in full force and effect during the terms of the contract. Sufficient proof of compliance with this section must be furnished at the time of execution of this contract. Failure to provide and continue in force such insurance as aforesaid shall be deemed a material breach of the contract and shall operate as an immediate termination thereof. The attention of the Contractor is directed to that portion of G.L. c. 149, s. 34A which provides that whoever violates any of its provisions shall be punished by a fine of not more than one hundred dollars or by imprisonment for six months, or both; and, in addition, any Contractor who violates any provision of this section shall be prohibited from contracting, directly or indirectly, with the Commonwealth or any political subdivision thereof for the construction, alteration, demolition, maintenance or repair of, or addition to, any public works or public building for a period of two years from the date of conviction of said violation.

(d) The Contractor shall pay to any reserve police officer employed by him the prevailing rate of wage paid to regular police officers, as required by M.G.L. c. 149, s. 34B.

44. Environmental Requirements

The Contractor shall comply, where applicable, with: federal Executive Order 11988, Floodplain Management, May 24, 1977 (42 FR 26951 et. seq.) particularly section 2 (a); the Coastal Zone Management Act of 1972 (16 U.S.C. 1451 et. seq.), as amended, particularly section 307 (c) and (d) (16 U.S.C. 1456 (c) and (d); the Safe Water Drinking Act of 1974 (42 U.S.C. 201, 300 (f) et seq., and 21 U.S.C. 349), as amended; the Endangered Species Act of 1973 (16 U.S.C. 1531 et seq.) as amended, particularly section 7 (16 U.S.C. 1536; the Wild and Scenic Rivers Act of 1968 (16 U.S.C. 1271 et seq.) as amended, particularly section 7 (b) and (c) (16 U.S.C. 1278 (b) and (c); the Clean Air Act (42 U.S.C. 7401 et seq.), as amended, particularly section 176 (c) and (d) (42 U.S.C. 7506 (c) and (d)); HUD Environmental Criteria and Standards (44 FR 40860-40866, July 12, 1979); "The American Standard Specification for Making Buildings and Facilities Accessible to and Usable by the Physically Handicapped," Number A-117.4-R 1971, subject to the exceptions contained in 41 CFR 101-19-604; and any corresponding provisions of State and local laws and regulations. The Contractor shall also comply, where applicable, with the National Environmental Policy Act of 1969, Solid Waste Disposal Act, as amended by the Resource Conservation and Recovery Act, Flood Disaster Protection Act of 1973, National Flood Insurance Act of 1968, and Protection of Wetlands Laws.

45. Historic Preservation

The Contractor shall, in the performance of environmental assessments under the National Policy Act, and the Massachusetts Environmental Policy Act, comply with section 106 of the National Historic Preservation Act of 1966 (16 U.S.C. 470), federal Executive Order 11593, and the Preservation of Archaeological and Historic Data Act of 1966 (17 U.S.C. 469 a-1 et seq.), by (a) consulting with the State Historic Preservation Officer to identify properties listed in or eligible for inclusion in the National Register of Historic Places that are subject to adverse effects (see 36 CFR Part 800.8) by the proposed activity, and (b) complying with all requirements established by HUD to avoid or mitigate adverse effects upon such properties.

46. Compliance with Air and Water Acts (for contracts exceeding $100,000)

In addition to the foregoing requirements, all nonexempt Contractors and Subcontractors shall furnish to the Owner, the following:

A. A stipulation by the Contractor or Subcontractors, that any facility to be utilized in the performance of any nonexempt contract or subcontract, is not listed on the List of Violating Facilities issued by the Environmental Protection Agency (EPA) pursuant to 40 CFR 15.20.

B. Agreement by the Contractor to comply with all the requirements of Section 114 of the Clean Air Act, as amended, (42 USC 1857c-8) and Section 308 of the Federal Water Pollution Control Act, as amended, (33 USC 1318) relating to inspection, monitoring, entry, reports and information, as well as all other requirements specified in said Section 114 and Section 308, and all regulations and guidelines issued thereunder.

C. A stipulation that as a condition for the award of the Contract, prompt notice will be given of any notification received from the Director, Office of Federal Activities, EPA, indicating that a facility utilized, or to be utilized for the Contract, is under consideration to be listed on the EPA List of Violating Facilities.

D. Agreement by the Contractor that he will include, or cause to be included, the criteria and requirements in paragraphs A through D of this section in every nonexempt subcontract and requiring that the Contractor will take such actions as the Government may direct as a means of enforcing such provisions.

47. Special Conditions Pertaining to Hazards, Safety Standards and Accident Prevention

A. Lead-Based Paint Hazards (applicable to contracts for construction or rehabilitation of residential structures)

The construction or rehabilitation of residential structures is subject to the HUD-Lead-Based Paint regulations, 24 CFR Part 35. The Contractor and Subcontractors shall comply with the provisions for the elimination of lead-based paint hazards under sup-part B of said regulations. The Owner will be responsible for the inspections and certifications required under Section 35.14(f) thereof, and requirements of M.G.L. Ch.111, Sec. 190-191, and the regulations for Lead Poisoning.

48. Compliance with the Massachusetts Community Development Block Grant Program Contract

Unless modified or changed by any special terms or conditions set forth in the Grant Contracts, all activities authorized by this Contract shall be subject to and performed in accordance with Appendix A and all other provisions of said Grant Contract, and all applicable federal, state, and local laws and regulations, including but not limited to those cited within the said Agreement, and any applicable regulations issued by HUD published in 24 CFR Part 570, as may be amended from time to time, and any procedures and guidelines as may be established by MASS. CDBG for the Massachusetts Community Development Block Grant Program.

49. Interest of Contractor and Employees

The Contractor covenants that he presently has no interest and shall not acquire interest, direct or indirect, in the study area or any parcels therein or any other interest which would conflict in any manner or degree with the performance of his services hereunder. The Contractor further covenants that in the performance of this contract, no person having any such interest shall be employed. Further, the Contractor shall adhere to the provisions of the Hatch Act (5 U.S.C. 1501 et seq.) which limits political activities by employees whose principal employment is in connection with an activity which is financed in whole or in part by federal funds.

50. Severability

If any provision of this Agreement is held invalid, the remainder of the Agreement shall not be affected thereby, and all other parts of this Agreement shall nevertheless be in full force and effect.

51. Availability of Funds

The compensation provided by this agreement is subject to the continued availability of federal funds for the Massachusetts Small Cities Program/MASS. CDBG, and to the continued eligibility of the Commonwealth and the Owner to receive such funds.

52. Confidentiality

The Contractor will protect the privacy of, and respect the confidentiality of information provided by, program participants, consistent with applicable federal and state regulations, including M.G.L. C.66, section 10, regarding access to public records.

APPENDIX E

CONTRACT DRAWING

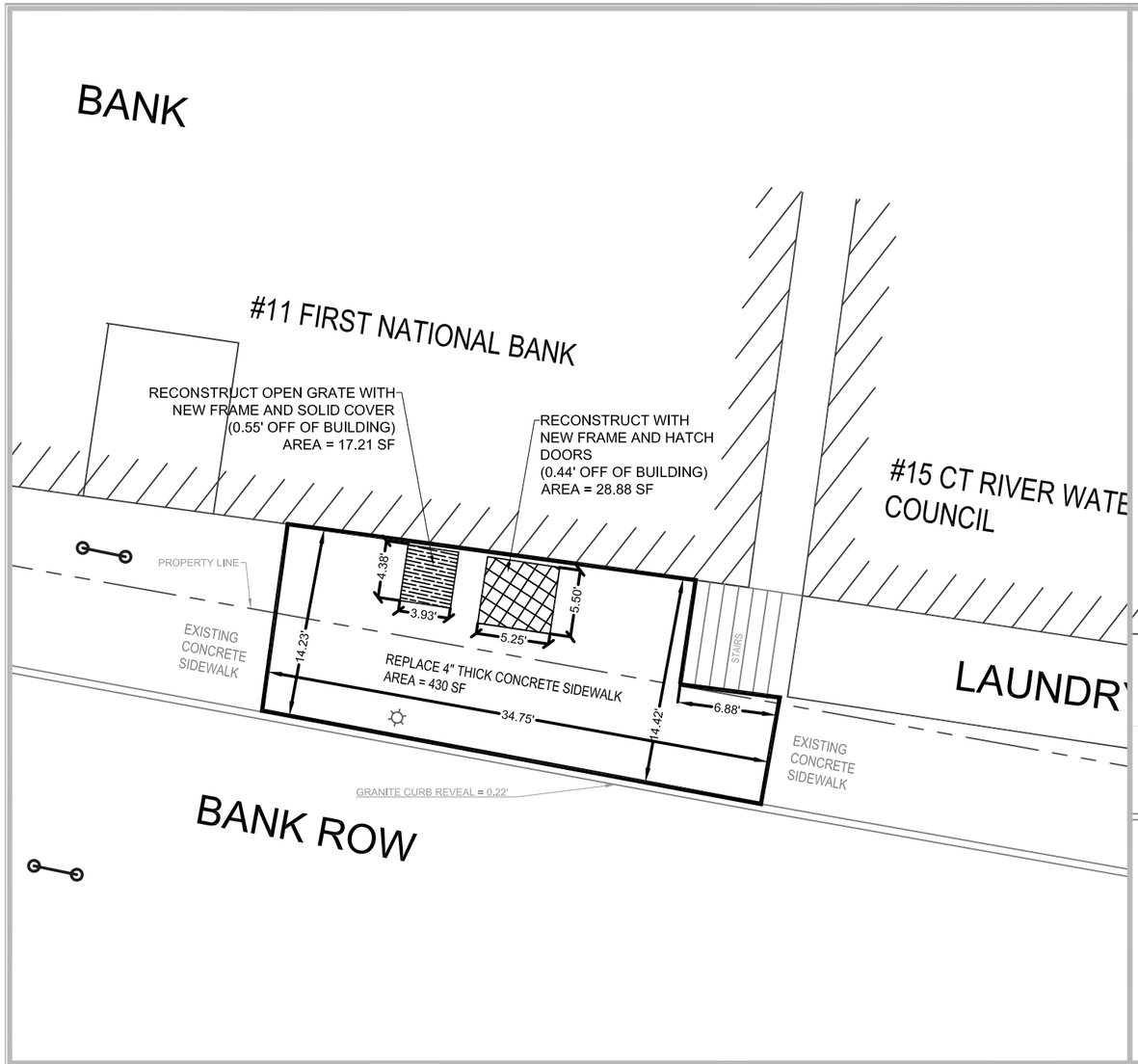

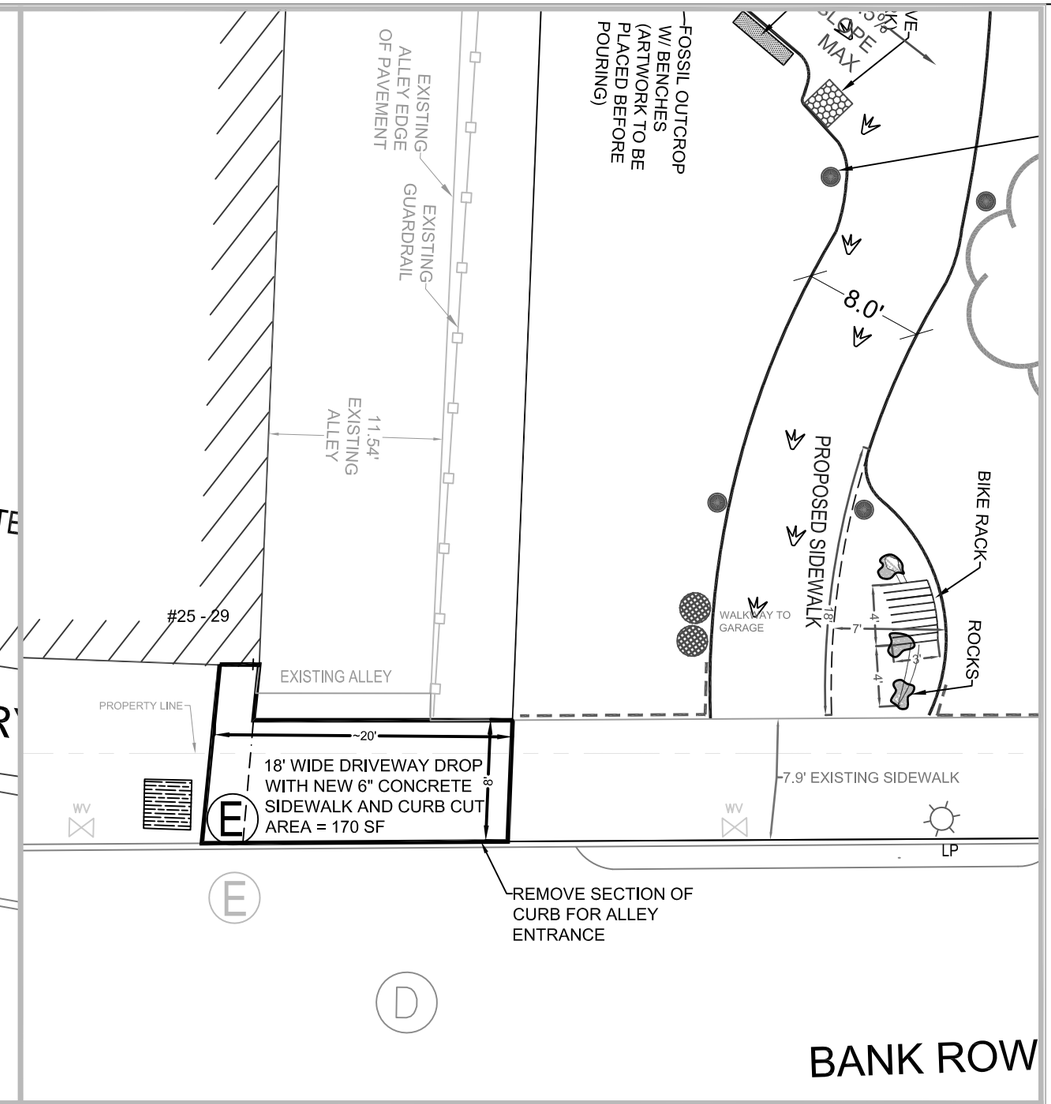

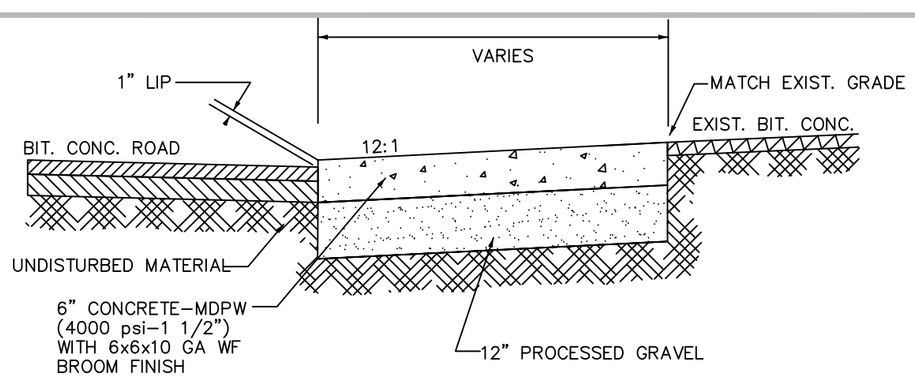

TYPICAL BITUMINOUS CONCRETE DRIVE DETAIL

WITH CONCRETE SIDEWALK & NO TREE BELT

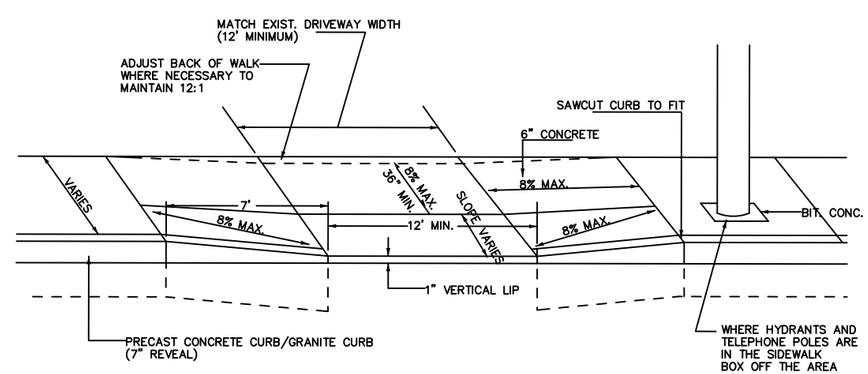

TYPICAL DRIVE DETAIL

Greenfield Department of Public Works Engineering
Town Hall 2nd Floor
14 Court Square
Greenfield, MA 01301
Phone:(413)772-1528
Fax: (413)773-9593

REV NO.	COMMENTS	DATE
1	BOTH SECTIONS OF SW	8-28-18

Scale 1:10

This drawing and design is the property of the Town of Greenfield. It may not be used for any purpose other than by the owner. The Town of Greenfield does not authorize the reproduction or conveyance of any information contained herein without prior written permission.

SIDEWALK REPLACEMENT SECTIONS

BANK ROW

Designed by:	Date: 8/28/2018	SHEET: 1 OF 1
Drawn by: RN		
Checked by:		