Greenfield School Administration Office Project

At the

Greenfield Middle School

195 Federal Street

Greenfield, MA 01301

Jablonski / DeVriese Architects
29 Elliot Street
Springfield MA 01105

Technical Specifications

April 27, 2016

TABLE OF CONTENTS

	Number of Pages
TITLE SHEET FOR PROJECT MANUAL	1
TABLE OF CONTENTS	2
INVITATION FOR BIDS	2
BIDDING DOCUMENTS	
INSTRUCTIONS TO BIDDERS	2
FORM FOR GENERAL BID	3
FORM OF BID BOND	1
\CONTRACT DOCUMENTS	
FORM OF OWNER/CONTRACTOR AGREEMENT	6
GENERAL CONDITIONS OF THE CONTRACT	45
FORM OF CONTRACTOR'S EQUAL EMPLOYMENT CERTIFICATION	1
FORM OF PAYMENT BOND	1
FORM OF PERFORMANCE BOND	1
SPECIFICATIONS	
DIVISION 1 - GENERAL REQUIREMENTS	
Section 01010 - SUMMARY OF WORK	1
Section 01040 - EXISTING CONDITIONS	1
Section 01050 - CONDUCT OF WORK	1
Section 01100 - LABOR REGULATIONS & WAGE RATES	15
Section 01300 - SUBMITTALS	3
Section 01500 - TEMPORARY FACILITIES	3
Section 01510 - PROTECTION	2
Section 01520 - CLEANING UP	2
Section 01700 - PROJECT CLOSEOUT	2
Section 01731 - CUTTING AND PATCHING	2
Section 01731 - SELECTIVE DEMOLITION	6
DIVISION 2 – SITEWORK	
Section 02300 - EARTHWORK	6
DIVISION 3 – CONCRETE	
Section 03301 - CAST IN PLACE CONCRETE (LIMITED APPLICATIONS)	5
DIVISION 4 – MASONRY	
Section 04810 - UNIT MASONRY ASSEMBLIES	4
DIVISION 5 – METAL	
Section 05120 - STRUCTURAL STEEL	4
Section 05700 - ORNAMENTAL METAL	6
DIVISION 6 - WOOD & PLASTICS	
Section 06105 - MISCELANEOUS ROUGH CARPENTRY	4
DIVISION 7 – MOISTURE PROTECTON	

Section 07920 - JOINT SEALANTS 5

DIVISION 8 – DOORS AND HARDWARE
Section 08111 - STEEL FRAMES 7
Section 08211 - FLUSH WOOD DOORS 6
Section 08411 - ALUMINUM FRAMED ENTRANCES AND STOREFRONTS 8
Section 08710 - DOOR HARDWARE 18

DIVISION 9 – FINISHES
Section 09221 - NON-STRUCTURAL METAL FRAMING 3
Section 09250 - GYPSUM BOARD 8
Section 09510 - ACOUSTICAL PANEL CEILINGS 4
Section 09651 - RESILIENT BASE 4
Section 09912 - INTERIOR PAINTING - (Filed Sub Bid Required) 8

DIVISION 23 – HVAC
Section 23000 - HVAC - (Filed Sub Bid Required) 133

DIVISION 26 – HVAC
Section 26000 - ELECTRICAL = (Filed Sub Bid Required) 11

LIST OF DRAWINGS

T1.0 – Title Sheet
D1.1 – Demolition Plan
A1.1 – First Floor - West
A1.2 – Reflected Ceiling Plan
A2.1 – Schedules
A2.2 – Details
A2.3 – Details
M1.1- First Floor HVAC Plan
M1.2 – HVAC Details
E1.1 – First Floor Plan - Lighting
E1.2 – First Floor Plan – Power
E2.1 – Legends Schedules and Details
ED.1 – Demo – First Floor Plan Electrical
FA.1 – First Floor Plan – Fire Alarm
FP0.1- Details and Notes - Fire Protection
FP1.1 - First Floor West – Fire Protection

Town of Greenfield

INVITATION FOR BIDS
for the Greenfield School Administration Project
at The Greenfield Middle School
195 Federal Street, Greenfield MA 01301

April 27, 2016

Town of Greenfield Massachusetts
INVITATION FOR BIDS

Greenfield School Administration Office Project
At the Greenfield Middle School

The Town of Greenfield Massachusetts invites sealed bids for the **Greenfield School Administration Office Project,** at the Greenfield Middle School, 195 Federal Street Greenfield, MA. The project is estimated at $750,000. Bid documents are available until the bid deadline, 2:00 p.m., May 19, 2016 at the Mayor's Office, 14 Court Square, Greenfield, MA 01301. Documents are available between the hours of 8 a.m. – 3 p.m. Mon. – Fri. or via e-mail; send requests the Greenfield Purchasing Department. Purchasing@greenfield-ma.gov
The Town Greenfield reserves the right to reject any or all bids.

INSTRUCTIONS FOR BIDDERS

1. Use the attached bid form and send to Greenfield Town Mayor's Office, 14 Court Square, Greenfield, MA 01301in a sealed envelope marked: **Greenfield School Administration Office Project at the Greenfield Middle School.**
   General Bids are due by 2:00 p.m. sharp on Thursday May 19, 2016.
   Filed Sub-Bids for the sub-trades listed below will be received until 2:00 PM on Thursday May 12, 2016. Bid forms must be in a sealed envelope. Also, include a 5% Bid Security Deposit in the sealed envelope as well. Be sure to confirm and note any addenda on the space provided on the attached bid form.
   Sub-Trades: Section 09900 Painting; Section 21000 Fire Supression; Section 23000 HVAC Systems; Section 26000 Electrical Systems

2. State prevailing wages apply as attached. Payroll sheets will need to be supplied to the Town on a weekly basis to cover all hours worked by personnel including all sub-contractors.

3. DCAM Certificate- General Construction applies to this project. A DCAM update statement must be included with the Chapter 149 bid form. DCAM Certificate Filed Sub-Bids- HVAC, Electrical, Fire-Protection and Painting, applies to this project. Files sub-bids must be submitted on the Chapter 149 Sub-Bid form.

4. Submit three references containing names, phone contacts, and addresses of three similar jobs performed on schools, municipal, or similar buildings, which have been completed in the last five years, and have been up and operational for at least two years. .

5. A bid deposit in the form of a bid bond, or cash, or a certified check shall accompany every bid for such contract, or a treasurer's or cashier's check issued by a responsible bank or trust company, payable to the awarding authority. The amount of such bid deposit shall be 5% of the total value of the bid.

6. A performance bond and a payment bond from the **successful bidder** is required in the amount of **100%** of the contract price.

7. A site visit will be conducted on Monday, May 2, 2016 from 8:30-9:30 AM at the Greenfield Middle School195 Federal Street, Greenfield, MA. For details contact Dan Pallotta, Owners Project Manager, 781-871-3136, Monday-Friday, 8:00 a.m.-5:00 p.m. Email: dpallotta@p-threeinc.com

8. The time for completion of the project is noted below under project timeline.

9. Bidders shall meet **all** stated specifications.

10. The estimated project timeline is as follows:

Project Time Line

• Wednesday April 27, 2016	Advertisements- Central Register
• Wednesday April 27, 2016	Advertisement- The Recorder
• Wednesday April 27, 2016	Post Bid- City Web Site
• **Monday May 2, 2016**	**Pre-bid Site Visit**
• **Thursday May 12, 2016**	**Filed Sub-Bids Opening 2 p.m.**
• **Thursday May 19, 2016**	**General Bid Opening 2 p.m.**
• Wednesday June 1, 2016 (estimate)	Contract Documents & Award
• **Friday September 02, 2016**	**Required Completion of Work**

FORM FOR GENERAL BID

To the Awarding Authority:

A. The Undersigned proposes to furnish all labor and materials required for the
Greenfield School Administration Office Project in Greenfield,

Massachusetts, in accordance with the accompanying plans and specifications prepared by Jablonski DeVriese Architects, Inc. for the contract price specified below, subject to additions and deductions according to the terms of the specifications.

B. This bid includes addenda numbered: _____

C. The proposed contract price is:

_____

dollars ($_____).

D. The subdivision of the proposed contract price is as follows:

Item 1. The work of the general contractor, being all work other than that covered by Item 2. $

Item 2. Sub-bids as follows:--

Sub-trade	Name of Sub-bidder	Amount	Bonds required, indicated by "Yes" or "No"
_____	_____	$_____	_____
_____	_____	$_____	_____
_____	_____	$_____	_____
_____	_____	$_____	_____

Total of Item 2 _____

The undersigned agrees that each of the above named sub-bidders will be used for the work indicated at the amount stated, unless a substitution is made. The undersigned further agrees to pay the premiums for the performance and payment bonds furnished by sub-bidders as requested

herein and that all of the cost of all such premiums is included in the amount set forth in Item 1 of this bid.
The undersigned agrees that if he is selected as general contractor, he will promptly confer with the awarding authority on the question of sub-bidders; and that the awarding authority may substitute for any sub-bid listed above a sub-bid filed with the awarding authority by another sub-bidder for the sub-trade against whose standing and ability the undersigned makes no objection; and that the undersigned will use all such finally selected sub-bidders at the amounts named in their respective sub-bids and be in every way as responsible for them and their work as if they had been originally named in this general bid, the total contract price being adjusted to conform thereto.

E. The undersigned agrees that, if he is selected as general contractor, he will within five days, Saturdays, Sundays and legal holidays excluded, after presentation thereof by the awarding authority, execute a contract in accordance with the terms of this bid and furnish a performance bond and also a labor and materials or payment bond, each of a surety company qualified to do business under the laws of the commonwealth and satisfactory to the awarding authority and each in the sum of the contract price, the premiums for which are to be paid by the general contractor and are included in the contract price; provided, however, that if there is more than 1 surety company, the surety companies shall be jointly and severally liable.

The undersigned hereby certifies that he is able to furnish labor that can work in harmony with all other elements of labor employed or to be employed on the work; that all employees to be employed at the worksite will have successfully completed a course in construction safety and health approved by the United States Occupational Safety and Health Administration that is at least 10 hours in duration at the time the employee begins work and who shall furnish documentation of successful completion of said course with the first certified payroll report for each employee; and that he will comply fully with all laws and regulations applicable to awards made subject to section 44A.

The undersigned further certifies under the penalties of perjury that this bid is in all respects bona fide, fair and made without collusion or fraud with any other person. As used in this subsection the word “person” shall mean any natural person, joint venture, partnership, corporation or other business or legal entity. The undersigned further certifies under penalty of perjury that the said undersigned is not presently debarred from doing public construction work in the commonwealth under the provisions of section twenty-nine F of chapter twenty-nine, or any other applicable debarment provisions of any other chapter of the General Laws or any rule or regulation promulgated thereunder.

Date _____

_____

(Name of General Bidder)

By _____

(Name of Person Signing Bid and Title)

_____

(Business Address)

_____

(City and State)

FORM FOR SUB-BID

To all General Bidders Except those Excluded:

A. The undersigned proposes to furnish all labor and materials required for completing, in accordance with the hereinafter described plans, specifications and addenda, all the work specified in Section No._____ of the specifications and in any plans specified in such section, prepared by Jablonski DeVriese Architects, Inc. for the
Greenfield School Administration Office Project

in Greenfield, MA for the contract sum:

_____

dollars ($_____).

B. This sub-bid includes addenda numbered _____

C. This sub-bid

( ) may be used by any general bidder except:

_____

_____

( ) may only be used by the following general bidders:

_____

_____

[To exclude general bidders, insert "X" in one box only and fill in blank following that box. Do not answer C if no general bidders are excluded.]

D. The undersigned agrees that, if he is selected as a sub-bidder, he will, within 5 days, Saturdays, Sundays and legal holidays excluded, after presentation of a subcontract by the general bidder selected as the general contractor, execute with such general bidder a subcontract

in accordance with the terms of this sub-bid, and contingent upon the execution of the general contract, and, if requested so to do in the general bid by the general bidder, who shall pay the premiums therefor, or if prequalification is required pursuant to section 44D 3/4, furnish a performance and payment bond of a surety company qualified to do business under the laws of the commonwealth and satisfactory to the awarding authority, in the full sum of the subcontract price.

E. The names of all persons, firms and corporations furnishing to the undersigned labor or labor and materials for the class or classes or part thereof of work for which the provisions of the section of the specifications for this sub-trade require a listing in this paragraph, including the undersigned if customarily furnished by persons on his own payroll and in the absence of a contrary provision in the specifications, the name of each such class of work or part thereto and the bid price for such class of work or part thereof are:

Name	Class of Work	Bid price

[Do not give bid price for any class or part thereof furnished by undersigned.]

F. The undersigned agrees that the above list of bids to the undersigned represents bona fide bids based on the hereinbefore described plans, specifications and addenda and that, if the undersigned is awarded the contract, they will be used for the work indicated at the amounts stated, if satisfactory to the awarding authority.

G. The undersigned further agrees to be bound to the general contractor by the terms of the hereinbefore described plans, specifications, including all general conditions stated therein, and addenda, and to assume toward him all the obligations and responsibilities that he, by those documents, assumes toward the owner.

H. The undersigned offers the following information as evidence of his qualifications to perform the work as bid upon according to all the requirements of the plans and specifications:--

1. Have been in business under present business name _____ years.

2. Ever failed to complete any work awarded?_____

3. List one or more recent buildings with names of the general contractor and architect on which you served as a sub-contractor for work of similar character as required for the above-named building.

	Building	Architect	General Contractor	Amount of Contract
(a)	_____	_____	_____	_____
(b)	_____	_____	_____	_____
(c)	_____	_____	_____	_____

4. Bank reference _____

I. The undersigned hereby certifies that he is able to furnish labor that can work in harmony with all other elements of labor employed or to be employed on the work; that all employees to be employed at the worksite will have successfully completed a course in construction safety and health approved by the United States Occupational Safety and Health Administration that is at least 10 hours in duration at the time the employee begins work and who shall furnish documentation of successful completion of said course with the first certified payroll report for each employee; and that he will comply fully with all laws and regulations applicable to awards of subcontracts subject to section 44F.

The undersigned further certifies under penalties of perjury that this sub-bid is in all respects bona fide, fair and made without collusion or fraud with any other person. As used in this subsection the word "person" shall mean any natural person, joint venture, partnership, corporation or other business or legal entity. The undersigned further certifies under penalty of perjury that the said undersigned is not presently debarred from doing public construction work in the commonwealth under the provisions of section twenty-nine F of chapter twenty-nine, or any other applicable debarment provisions of any other chapter of the General Laws or any rule or regulation promulgated thereunder.

Date_____

_

_____

(Name of Sub-bidder)

By _____

(Title and Name of Person Signing Bid)

_____

(Business Address)

_____

(City and State)

Table of Contents

1. **ARTICLE 1**

CONTRACT DOCUMENTS

1.1. Definitions
1.1.1. The Contract Documents 1
1.1.2. The Contract 1
1.1.3. The Work 1
1.1.4. The Project 1
1.2. Execution, Correlation and Intent 1
1.3. Ownership and Use of Documents 2

2. **ARTICLE 2**

Designer

2.1. Definition 2
2.2. Administration of the Contract 3

3. **ARTICLE 3**

OWNER

3.1. Definition 4
3.2. Information and Services Required of the Owner 5
3.3. Owner's Right To Stop The Work 6
3.4. Owner's Right To Carry Out the Work 7
3.5. Partial Occupancy 7

4. **ARTICLE 4**

CONTRACTOR

4.1. Definition 8
4.2. Review of Contract Documents 8
4.3. Supervision and Construction Procedures 8
4.4. Labor and Materials 9
4.5. Warranty 9
4.6. Taxes 10
4.7. Permits, Fees and Notices 10
4.8. Allowances (intentionally deleted) 10
4.9. Superintendent 10

4.10. Progress Schedule 10
4.11. Documents and Samples at the Site 11
4.12. Shop Drawings, Product Data and Samples 11
4.13. Use of Site 11
4.14. Cutting and Patching of Work 11
4.15. Cleaning Up 12
4.16. Communications 12
4.17. Royalties and Patents 12
4.18. Indemnification 12

5. **ARTICLE 5**

SUBCONTRACTORS

5.1. Definition 13
5.2. Award of Subcontracts and Other Contracts For Portions of the Work 13
5.3. Subcontractural Relations 24

6. **ARTICLE 6**

WORK BY OWNER OR BY SEPARATE CONTRACTOR

6.1. Owner's Right to Perform Work and To Award Separate Contracts 14
6.2. Mutual Responsibility 14
6.3. Owner's Right to Clean Up 15

7. **ARTICLE 7**

MISCELLANEOUS PROVISIONS

7.1. Governing Law 15
7.2. Successors and Assigns 15
7.3. Written Notice 15
7.4. Claims For Damages 16
7.5. Performance Bond and Labor And Material Payment Bond 16
7.6. Rights And Remedies 16
7.7. Tests 16
7.8. Interest 16
7.9. Disputes 16
7.10. Record Keeping and Management Controls 18

8. **ARTICLE 8**

TIME

8.1. Definitions 19
8.2. Progress and Completion 19
8.3. Delays and Extension of Time 19

9. **ARTICLE 9**

PAYMENTS AND COMPLETION

9.1. Contract Sum 20
9.2. Schedule of Values 20
9.3. Application for Payment 20
9.4. Certificates For Payment 21
9.5. Progress Payments 21
9.6. Payments Withheld 24
9.7. Failure of Payment 25
9.8. Substantial Completion 25
9.9. Final Completion and Final Payment 25

10. **ARTICLE 10**

PROTECTION OF PERSONS AND PROPERTY

10.1. Safety Precautions and Programs 26
10.2. Safety of Persons and Property 26
10.3. Emergencies 27

11. **ARTICLE 11**

INSURANCE

11.1. Contractor's Liability Insurance 27
11.2. Owner's Liability Insurance 28
11.3. Property Insurance 28
11.4. Loss of Use Insurance 30

12. **ARTICLE 12**

CHANGES IN THE WORK

12.1. Change Orders 30
12.2. Concealed Conditions 31
12.3. Claims for Additional Cost 31
12.4. Minor Changes in the Work 32

13. **ARTICLE 13**

UNCOVERING AND CORRECTION OF WORK

13.1. Uncovering of Work 32
13.2. Correction of Work 32
13.3. Acceptance of Defective or Non-Conforming Work 33
13.4. Special Guarantees And Warranties 33

14. **ARTICLE 14**

TERMINATION OF THE CONTRACT

14.1. Termination By the Contractor 33
14.2. Termination By The Owner 34

15. **ARTICLE 15**

LABOR REQUIREMENTS OF THE COMMONWEALTH OF MASSACHUSETTS

15.1. Labor Laws 34
15.2. Executive Orders 35

1. **ARTICLE 1**

CONTRACT DOCUMENTS

1.1.1 Definitions

The Contract Documents

The Contract documents consist of the Owner-Contractor Agreement, Advertisement, Bidding Documents, Contract Forms, Conditions of the Contract, Specifications, Drawings, and all addenda issued prior to and all Modifications issued after execution of the Contract. A Modification is (1) a written amendment to the contract signed by both parties, (2) a Change Order, (3) a written interpretation issued by the Designer pursuant to Subparagraph 2.2.8, or (4) a written order for a minor change in the work issued by the Designer pursuant to Paragraph 12.4.

1.1.2 The Contract

The Contract Documents form the Contract for Construction. This Contract represents the entire and integrated agreement between the parties hereto and supersedes all prior negotiations, representations, or agreements, either written or oral. The Contract may be amended or modified only by a Modification as defined in Subparagraph 1.1.1. The Contract Documents shall not be construed to create any contractual relationship of any kind between the Designer and the Contractor, but the Designer shall be entitled to performance of obligations intended for his benefit, and to enforcement thereof. Nothing contained in the Contract Documents shall create any contractual relationship between the Owner or the Designer and any Subcontractor or Sub-subcontractor.

1.1.3 The Work

The Work comprises the completed construction required by the Contract Documents and includes all labor necessary to produce such construction, and all materials and equipment incorporated or to be incorporated in such construction.

1.1.4 The Project

The project is the total construction of which the Work performed under the Contract Documents may be the whole or a part.

1.2 Execution, Correlation and Intent

The Contract Documents shall be signed in not less than triplicate by the Owner and Contractor. If either the Owner or the Contractor or both do not sign the Conditions of the Contract, Drawings, Specifications, or any of the other Contract Documents, the Designer shall identify such Documents.

By executing the Contract, the Contractor represents that he has visited the site, familiarized himself with the local conditions under which the work is to be performed, and correlated his observations with the requirements of the Contract Documents.

The intent of the Contract Documents is to include all items necessary for the proper execution and completion of the Work. The Contract Documents are complementary, and what is required by any one shall be as binding as if required by all. Work not covered in the Contract Documents will not be required unless it is consistent therewith and is reasonably inferable therefrom as being necessary to produce the intended results. Words and abbreviations which have well-known technical or trade meanings are used in the Contract Documents in accordance with such recognized meanings. In case of inconsistent requirements in the Contract Documents the requirements for the greater quantity or higher quality shall take precedence and shall be the Contract requirement.

The organization of the specifications into divisions, sections and articles, and the arrangement of Drawings shall not control the Contractor in dividing the work among Subcontractors or in establishing the extent of Work to be performed by any trade.

Where used in conjunction with the Designer`s or Engineer`s response to submittals, requests, applications, inquiries, reports and claims by the Contractor, the meaning of the term "approved" will be held to the limitations of the Designer`s responsibilities and duties as specified in the General and Supplementary Conditions. In no case will "approval" by the Designer be interpreted as an assurance to the Contractor that the requirements of the Contract Documents have been fulfilled.

Where reference is made to standards or trade association publications, it shall mean to refer to the latest edition and revision thereof, if any, in effect on the date of the contract Documents.

Except as otherwise defined in context, the following words, terms, and phrases shall mean as follows:

(1) "as shown," "as indicated," "as detailed," or "as noted" shall mean "as shown (indicated, etc.) on drawings or any other diagrammatic or written reference on the Drawings."

(2) "Provide" shall mean "furnish and install, complete and ready for intended use."

(3) "Directed," "required," "permitted," "ordered," "designed," "prescribed," and similar words shall mean the "direction (requirement, permission, order, designation, or prescription) of the Designer."

(4) "Approved," "acceptable," "satisfactory," and similar words shall mean "approved by (acceptable or satisfactory to) the Designer".

(5) "Necessary," "responsible," "proper," "correct," and similar words shall mean "necessary (reasonable, proper, or correct) in the judgment of the Designer."

Words in the singular shall also mean and include the plural, wherever the context so indicates, and words in the plural shall mean the singular, wherever the context so indicates.

1.3 Ownership and Use of Documents

All Drawings, Specifications and copies thereof furnished by the Designer are and shall remain the property of the Awarding Authority. They are to be used only with respect to his project and are not to be used any other project. With the exception of one contract set for each party to the Contract, such documents are to be returned or suitably accounted for to the Awarding Authority on request at the completion of the Work. Submission or distribution to meet official regulatory requirements or for other purposes in connection with the Project is not to be construed as publication in derogation of the Awarding Authority's rights.

2 ARTICLE 2

Designer

2.1 Definition

The duly authorized representative of the Owner that is responsible for the satisfactory completion of the project.

2,2 Administration of the Contract

The Designer will provide administration of the Contract as hereinafter described. The Designer will be the Owner's representative during construction and until final payment is due. The Designer will advise and consult with the Owner. The Owner's instructions to the Contractor shall be forwarded through the Designer. The Designer will have authority to act on behalf of the Owner only to the extent provided in the Contract Documents, unless otherwise modified by written instrument in accordance with Subparagraph 2.2.18.

The Designer will visit the site at intervals appropriate to the stage of construction to familiarize himself generally with the progress and quality of the Work and to determine in general if the Work is proceeding in accordance with the Contract Documents. However, the Designer will not be required to make exhaustive or continuous on-site inspections to check the quality or quantity of the Work. On the basis of his on-site observations as an Designer, he will keep the Owner informed of the progress of the work, and will endeavor to guard the Owner against defects and deficiencies in the Work of the Contractor.

The Designer will not be responsible for and will not have control or charge of construction means, methods, techniques, sequences or procedures, or for safety precautions and

programs in connection with the Work, and he will not be responsible for the Contractor's failure to carry out the Work in accordance with the Contract Documents. The Designer will not be responsible for or have control or charge over the acts or omissions of the Contractor, Subcontractors, or any of their Designers or employees, or any other persons performing any of the Work.

The Designer shall at all times have access to the Work wherever it is in preparation and progress. The Contractor shall provide facilities for such access so the Designer may perform his functions under the Contract Documents.

Based on the Designers observations and an evaluation of the Contractor's Applications for Payment, the Designer will determine the amounts owing to the Contractor and will issue Certificates for Payment in such amounts, as provided in Paragraph 9.4.

The Designer will be the interpreter of the requirements of the Contract Documents and the judge of the performance thereunder by both the Owner and Contractor.

The Designer will render interpretations necessary for the proper execution or progress of the Work, with reasonable promptness and within thirty (30) days of request for interpretation, in accordance with Subparagraph 3.2.8. Either party to the Contract may make written request to the Designer for such interpretations.

Claims, disputes and other matters in question between the Contractor and the Owner relating to the execution or progress of the Work or the interpretation of the Contract Documents shall be referred initially to the Designer for decision which will render in writing within thirty (30) days.

All interpretations and decisions of the Designer shall be consistent with the intent of and reasonably inferable from the Contract Documents and will be in writing or in the form of drawings. In his capacity as interpreter and judge, he will endeavor to secure faithful performance by both the Owner and the Contractor, will not show partiality to either, and will not be liable for the result of any interpretation or decision rendered in good faith in such capacity.

The Designer's decisions in matters relating to artistic effect will be final if consistent with the intent of the Contract Documents.

The Designer's decision shall be subject to the Contractor's right of appeal to the Administrator, as set forth in Subparagraph 7.9.

The Designer will have authority to reject Work which does not conform to the Contract Documents. Whenever, in his opinion, he considers it necessary or advisable for the implementation of the intent of the Contract Documents, he will have authority to require special inspection or testing of the Work in accordance with Subparagraph 7.7.2 whether or not such Work be then fabricated, installed or completed. However, neither the Designer's authority to act under this Subparagraph 2.2.13, nor any decision made by him in good faith either to exercise or not to exercise such authority, shall give rise to any duty or responsibility of the Designer to the Contractor, any Subcontractor, any of their Designers or employees, or any other person performing any of the Work.

The Designer will review and approve or take other appropriate action upon Contractor's submittals such as Shop Drawings, Product Data and Samples, but only for conformance with the design concept of the Work and with the information given in the Contract Documents. Such action shall be taken with reasonable promptness so as to cause no delay. The Designer's approval of a specific item shall not indicate approval of an assembly of which the item is a component.

The Designer will prepare Change Orders in accordance with Article 12, and will have authority to order minor changes in the Work as provided in Subparagraph 12.4.1.

The Designer will conduct inspections to determine the dates of Substantial Completion and final completion, will receive and forward to the Owner for the Owner's review written warranties and related documents required by the Contract and assembled by the Contractor, and will issue a final Certificate for Payment upon compliance with the requirements of Paragraph 9.9.

If the Owner and Designer agree, the Designer will provide one or more Project Representatives to assist the Designer in carrying out his responsibilities at the site. The duties, responsibilities and limitations of authority of any such Project Representative shall be as explained by the Designer at a pre-construction meeting.

The duties, responsibilities and limitations of authority of the Designer as the Owner's representative during construction as set forth in the Contract Documents will not be modified or extended without written consent of the Owner, the Contractor and the Designer.

In case of the termination of the employment of the Designer, the Owner shall appoint an Designer whose status under the Contract Documents shall be that of the former Designer.

3, **ARTICLE 3**

OWNER

3.1 Definitions

The term "Owner", sometimes also referred to as the "Awarding Authority" or "Authority" means the Awarding Authority identified in the Owner-Contractor Agreement, a public body, politic and corporate, organized and existing under the laws of the Commonwealth of Massachusetts. No member of the Awarding Authority shall in any way, directly or indirectly be personally liable under any of the provisions of this Contract.

The term "Administrator" means the Designer as defined in Article 2.0.

The term "Construction Advisor" means the Designer as defined in Article 2.0.

The Awarding Authority and its authorized representatives and Designers shall at all times have access to, and be permitted to observe and review all Work, materials, payrolls, records of personnel, conditions of employment, invoices of materials, and other relevant data and records.

All communications, except for protests or disputes, of the Contractor to the Awarding Authority and its representatives and Designers must be forwarded through the Designer. They shall be in writing, addressed to the Awarding Authority and be considered given if delivered to the office of Designer either by hand or if in a sealed, postage prepaid envelope, addressed to the Awarding Authority c/o the Designer: or if delivered prepaid to a telegraph office for transmission to the Designer's office.

Items requiring the Administrator's countersignature as per sub-paragraph 3.1.7 shall be valid only with the signature of the Administrator or with the signature of those designated to act in his/her stead. The Construction Advisor's signature is not sufficient on items requiring the Administrator's signature.

Items requiring the Administrator's countersignature to be valid shall include but not be limited to the following:

Approval, substitutions, and final selection of Sub- Bidders pursuant to M.G.L. Section 44F of Chapter 149.

Change Orders, whether or not they affect a change in the Contract Sum or in the Contract Time.

Written orders, notices, and approvals given by the Owner pursuant to the Contract Documents or pursuant to any Laws applicable to this Contract.

Stop Work order.

Certificate of Substantial Completion.

Final payment.

Termination of Contract.

In any instance needing clarification as to whose signature is required, the Contractor shall seek clarification in writing from the Designer.

Work undertaken by the Contractor or a Subcontractor at the Owner's or any other person's order without the Administrator's countersignature prior to the start of such work shall be considered unauthorized work shall not be considered cause for any extra payment on account of the Contract, and the Contractor or Subcontractor shall be responsible for performing, at their own expense any corrective measures required by the Administrator.

3.2 Information and Services Required of the Owner

The Owner shall, at the request of the Contractor, at the time of execution of the Owner-Contractor Agreement, furnish to the Contractor reasonable evidence that he has made financial arrangements to fulfill his obligations under the Contract. Unless such reasonable evidence is furnished, the Contractor is not required to execute the Owner-Contractor Agreement or to commence the Work.

The Owner shall furnish all surveys describing the physical characteristics, legal limitations and utility locations for the site of the Project, and a legal description of the site.

Except as provided in Subparagraph 4.7.1, the Owner shall secure and pay for necessary approvals, easements, assessments and charges required for the construction, use or occupancy of permanent structures or for permanent changes in existing facilities.

Information or services under the Owner's control shall be furnished by the Owner with reasonable promptness to avoid delay in the orderly progress of the Work.

The Owner will furnish to the Contractor, free of charge, all copies of Contract Documents reasonably necessary for the execution of the Work, including one set for record purposes. In addition, the Owner, through the Designer, will furnish to the Contractor a reproducible transparency and one black line print of details and clarification drawings issued after the Contract has been awarded. The Contractor, at his own expense, shall provide and distribute such number of prints of these transparencies as required for his own and his Subcontractors' use.

The Owner shall forward all instructions to the Contractor through the Designer. Communications shall be in writing and be considered given if delivered at the office of the Contractor; or if in a sealed, postage-prepaid envelope addressed to the Contractor's office and deposited in the United States mail; or if delivered prepaid to a telegraph office for transmission to the Contractor's office.

The foregoing are in addition to other duties and responsibilities of the Owner enumerated herein and especially those in respect to Work by Owner or by Separate Contractors, Payments and Completion, and insurance in Articles 6,9 and 11 respectively.

Pursuant to Chapter 30 of the General Laws, the following Section 39 P is included herein in its entirety.

Every contract subject to Section 39 M of this Chapter or Section 44 A of Chapter 149 which requires the Awarding Authority, any official, its Designer or engineer to make a decision on interpretation of the specifications, approval of equipment, material or any other approval, or progress of the work, shall require that the decision be made promptly and, in any event, no later than thirty days after the written submission for decision: but if such decision requires extended investigation and study, the awarding authority, the official, Designer or engineer shall, within thirty days after the receipt of the submission, give the party making the submission written notice of the reasons why the decision cannot be made within the thirty-day period and the date by which the decision will be made.

3.3 Owner's Right To Stop The Work

If the Contractor fails to correct defective Work as required by Paragraph 13.2 or persistently fails to carry out the Work in accordance with the Contract Documents, the Owner, by a written order signed personally or by an Designer specifically so empowered by the Owner in writing, may order the Contractor to stop the Work, or any portion thereof, until the cause for such order has been eliminated; however, this right of the Owner to stop the Work shall not give

rise to any duty on the part of the Owner to exercise this right for the benefit of the Contractor or any other person or entity, except to the extent required by Subparagraph 6.1.3.

Pursuant to Chapter 30 of the General Laws, the following provisions (a) and (b) of Section 39 O are included herein in their entirety:

The Awarding Authority may order the General Contractor in writing to suspend, delay, or interrupt all or any part of the Work for such period of time as it may determine to be appropriate for the convenience of the Awarding Authority; provided, however, that if there is a suspension, delay or interruption for fifteen days or more due to a failure of the Awarding Authority to act within the time specified in this contract, the Awarding Authority shall make an adjustment in the Contract price for any increase in the cost of performance of this Contract, but shall not include any profit to the General Contractor on such increase; and provided further, that the Awarding Authority shall not make any adjustment in the Contract Price under this provision for any suspension, delays, interruption or failure to act to the extent that such is due to any cause for which this Contract provides for an equitable adjustment of the Contract Price under any other provisions.

The general contractor must submit the amount of a claim under provision (a) to the awarding authority in writing as soon as practicable after the end of the suspension, delay, interruption or failure to act and, in any event, not later than the date of final payment under this contract and, except for costs due to a suspension order, the awarding authority shall not approve any costs in the claim incurred more than twenty days before the general contractor notified the awarding authority in writing of the act or failure to act involved in the claim.

3.4 Owner's Right To Carry Out the Work

If the Contractor defaults or neglects to carry out the Work in accordance with the Contract Documents and fails within seven days after receipt of written notice from the Owner to commence and continue correction of such default or neglect with diligence and promptness, the Owner may, after seven days following receipt by the Contractor of an additional written notice and without prejudice to any other remedy he may have, make good such deficiencies. In such case an appropriate Change Order shall be issued deducting from the payments then or thereafter due the Contractor the cost of correcting such deficiencies, including compensation for the Designer's additional services made necessary by such default, neglect or failure. Such action by the Owner and the amount charged to the Contractor are both subject to the prior approval of the Designer. If the payments then or thereafter due the Contractor are not sufficient to cover such amount, the Contractor shall pay the difference to the Owner.

3.5 Partial Occupancy

`Prior to the date of Substantial Completion of the entire Project stipulated in the agreement, the Owner shall have the right, from time to time, to occupy and use any portion of the Project as the Work in connection therewith is substantially completed, provided such occupancy and use do not unduly interfere with the Contractor's operations.

The Designer will, prior to any such occupancy and use, give written notice to the Contractor, indicating the areas intended to be occupied and used, and the intended commencement date of such occupancy and use. Occupancy and use shall not commence prior to a time mutually agreed to by the Owner and the Contractor.

Upon receipt of such notice of intent, the Contractor shall promptly secure and submit to the Designer endorsement from the insurance carrier and written consent from the surety, permitting occupancy and use of the Work, or any designated portion thereof, by the Owner prior to Substantial Completion of the entire Project. The Contractor shall be permitted to cancel his building risk insurance for building occupied by the Owner.

Partial occupancy by the Owner shall not constitute an acceptance of Work not in accordance with the Contract Documents nor relieve the Contractor from the obligation of performing any Work required by the Contract but not completed at the time of occupancy. Before such occupancy, the Designer will give the Contractor a list of items to be completed prior to Final Completion occurring in the areas to be occupied.

The Contractor shall be relieved of all maintenance costs of the portion of the Project occupied under this agreement.

The Contractor shall not be responsible for wear and tear or damage resulting solely from such occupancy.

The Contract Sum will be adjusted by mutually acceptable arrangements between the Owner and the Contractor with respect to heat, electricity and water furnished by the Contractor to the portion of the Work so occupied.

When any portion of the building is in condition to receive fittings, appliances, furniture or other property furnished, or furnished and installed, by the Owner under separate contracts, the Contractor shall allow the Owner to bring such items into the building and shall provide all reasonable facilities and protection therefor.

4. **ARTICLE 4**

CONTRACTOR

4.1 Definition

The "Contractor" sometimes referred to as the "General Contractor", is the person or entity identified as such in the Owner-Contractor Agreement and is referred to throughout the Contract Documents as if singular in number and masculine in gender. The term Contractor means the Contractor or his authorized representative.

4.2 Review of Contract Documents

The Contractor shall carefully study and compare the Contract Documents and shall at once report to the Designer any error, inconsistency or omission he may discover. The Contractor shall not be liable to the Owner or the Designer for any damage resulting from any such errors, inconsistencies or omissions in the Contract Documents. The Contractor shall perform no portion of the Work at any time without Contract Documents or, where required, approved Shop Drawings, Product Data or Samples for such portion of the Work.

The Contractor shall compare all grades, lines, levels, and dimensions shown on the Drawings with actual site conditions, and before commencing work he shall promptly report to, and await for the reply from the Designer, any inconsistencies he may discover. The Designer shall reply within five working days.

4.3 Supervision and Construction Procedures

The Contractor shall supervise and direct the Work, using his best skill and attention. To this end, he shall employ a superintendent who shall be on the site all times work is in progress. He shall be solely responsible for all construction means, methods, techniques, sequences and procedures and for coordinating all portions of the Work under the Contract.

The Contractor shall be responsible to the Owner for the acts and omissions of his employees, Subcontractors and their Designers and employees, and other persons performing any of the Work under a contract with the Contractor.

The Contractor shall not be relieved from his obligations to perform the Work in accordance with the Contract Documents either by the activities or duties of the Designer in his administration of the Contract, or by inspections, tests or approvals required or performed under Paragraph 7.7 by persons other than the Contractor.

The Contractor, at his own expense, shall do all engineering required for establishing grades, lines, levels, dimensions, layouts, and reference points for all trades; shall be responsible for maintaining bench marks and other survey marks; and shall replace as directed any bench marks or survey marks which have been disturbed or destroyed.

Unless otherwise required under the Contract Documents, or directed in writing by the Designer, all Work shall be done during regular working hours. However, if the Contractor desires to carry on the Work outside of regular working hours or Saturdays, Sundays, or Massachusetts holidays he shall allow ample time to enable satisfactory arrangements to be made for inspecting work in progress and shall bear all cost with respect thereto. The Owner shall bill the Contractor directly for such costs.

Work done outside of regular working hours without the consent or knowledge of the Designer shall be subject to additional inspection and testing directed by the Designer. The cost of this testing shall be paid by the Contractor whether the Work is found to be acceptable or not.

4.4 Labor and Materials

Unless otherwise provided in the Contract Documents, the Contractor shall provide and pay for all labor, materials, equipment, tools, construction equipment and machinery, water, heat, utilities, transportation, and other facilities and services necessary for the proper execution and completion of the Work, whether temporary or permanent and whether or not incorporated or to be incorporated in the Work.

The Contractor shall at all times enforce strict discipline and good order among his employees and shall not employ on the Work any unfit person or anyone not skilled in the task assigned to him.

Except where otherwise specifically provided to the contrary, the words "or equal" are hereby inserted immediately following the naming or describing of each article, assembly, system, or any component part thereof, in any of the Contract Documents.

In accordance with Section 39M of Chapter 30 of the General Laws "an item shall be considered equal to the item so named or described if (1) it is at least equal in quality, durability, appearance, strength, and design, (2) it will perform at least equally the function imposed by the general design for the public work being contracted for or the material being purchased, and (3) it conforms substantially, even with deviations, to the detailed requirements for the item in the said specifications".
However, the Contractor and the Subcontractors are required to submit to the Designer for consideration as to its equality, a written notice containing the name and full particulars pertaining to any items other than the specific or specifics named or described in the Contract Documents. Such submittal shall in no event be made later than 120 calendar days prior to the incorporation of the item into the Work, except in any case in which (1) the period of time specified in the Contract Documents for Substantial completion of the Work is less than 120 calendar days form the time of execution of the Contract. The aforesaid written notice shall be submitted to the Designer immediately following the execution of the Contract.

Upon receipt of such written notice, the Designer shall investigate whether the item in question shall be considered equal to the item named or described in the Contract Documents. Upon conclusion of the investigation, the Designer shall, in writing, promptly advise the Contractor that the item in question is, or is not, considered the equal of the item named or described as aforesaid, and that said item may, or may not, be furnished on the Work accordingly. Such notice must have the concurrence of the Awarding Authority to be valid.

In no case may an item be furnished on the Work other than the item named or described, unless the Designer shall consider the item equal to the item so named or described, as provided by law.

The equality of items offered as "equal" to the items named or described shall be proved to the satisfaction of the Designer at the expense of the Contractor or Subcontractor submitting the substitution.

The Contractor or Subcontractor, as the case may be, shall assume full responsibility for the prior performance of any item submitted as "equal" to the specific or specifics named and

assume the costs of any changes in his own Work or in the Work of other trades which may be due to such substitution.

4.5 Warranty

The Contractor warrants to the Owner and the Designer that all materials and equipment furnished under this Contract will be new unless otherwise specified, and that all Work will be of good quality, free from faults and defects and in conformance with the Contract Documents. All Work not conforming to these requirements, including substitutions not properly approved and authorized, may be considered defective. If required by the Designer, the Contractor shall furnish satisfactory evidence as to the kind and quality of materials and equipment. This warranty is not limited by the provisions of Paragraph 13.2.

4.6 Taxes

The Contractor shall pay all sales, consumer, use and other similar taxes for the Work or portions thereof provided by the Contractor which are legally enacted at the time bids are received, whether or not yet effective.

The Owner is exempt from payment of the Commonwealth of Massachusetts Sales Tax.

4.7 Permits, Fees and Notices

Unless otherwise provided in the Contract Documents, the Contractor shall secure and pay for the building permit and for all other permits and governmental fees, licenses and inspections necessary for the proper execution and completion of the Work, which are customarily secured after execution of the Contract and which are legally required at the time the bids are received.

The Contractor shall give all notices and comply with all laws, ordinances, rules, regulations and lawful orders of any public authority bearing on the performance of the Work.

It is not the responsibility of the Contractor to make certain that the Contract Documents are in accordance with applicable laws, statutes, building codes and regulations. If the Contractor observes that any of the Contract Documents are at variance therewith in any respect, he shall promptly notify the Designer in writing, and any necessary changes shall be accomplished by appropriate Modification.

If the Contractor performs any Work knowing it to be contrary to such laws, ordinances, rules and regulations, and without such notice to the Designer, he shall assume full responsibility therefor and shall bear all costs attributable thereto.

4.8 Allowances (intentionally deleted)

4.9 Superintendent

The Contractor shall employ a competent superintendent and necessary assistants who shall be in attendance at the Project site during the progress of the Work. The superintendent shall represent the Contractor and all communications given to the superintendent shall be as binding as if given to the Contractor. Important communications shall be confirmed in writing. Other communications shall be so
confirmed on written request in each case.

4.10 Progress Schedule

The Contractor, immediately after being awarded the Contract, shall prepare and submit for the Owner's and Designer's information an estimated progress schedule for the Work. The progress schedule shall be related to the entire Project to the extent required by the Contract Documents, and shall provide for expeditious and practicable execution of the Work.

The progress schedule shall show by bar graph or critical path method, as acceptable to the Designer, in sufficient detail, clearly the interrelationships between the various construction operations and the percentage of completion and the dollar value on the first day of each month for the Work in each Section of the Specifications and also for the entire work. The graph shall also show the date that the Work in each Section commenced.

A copy of the progress schedule shall be kept in the Contractor's field office and be brought up to date each month to show the actual progress of the Work.

4.11 Documents and Samples at the Site

The Contractor shall maintain at the site for the Owner one record copy of all Drawings, Specifications, Addenda, Change Orders and other Modifications, in good order and marked currently to record all changes made during construction, and approved Shop Drawings, Product Data and Samples. These shall be available to the Designer and shall be delivered to him for the Owner upon completion of the Work.

4.12 Shop Drawings, Product Data and Samples

Shop Drawings are drawings, diagrams, schedules and other data specially prepared for the Work by the Contractor or any Subcontractor, manufacturer, supplier or Distributor to illustrate some portion of the Work.

Product Data are illustrations, standard schedules, performance charts, instructions, brochures, diagrams and other information furnished by the contractor to illustrate a material, product or system for some portion of the Work.

Samples are physical examples which illustrate materials, equipment or workmanship and establish standards by which the Work will be judged.

The Contractor shall review, approve and submit, with reasonable promptness and in such sequence as to cause no delay in the Work or in the work of the Owner or any separate contractor, all Shop Drawings, Product Data and Samples required by the Contract Documents.

By approving and submitting Shop Drawings, Product Data and Samples, the Contractor represents that he has determined and verified all materials, field measurements and field construction criteria related thereto, or will do so, and that he has checked and coordinated the information contained within such submittals with the requirements of the Work and of the Contract Documents.

The Contractor shall not be relieved of responsibility for any deviation from the requirements of the Contract Documents by the Designer's approval of Shop Drawings, Product Data or Samples under Subparagraph 2.2.14 unless the Contractor has specifically informed the Designer in writing of such deviation at the time of submission and the Designer has given written approval to the specific deviation. The Contractor shall not be relieved from responsibility for errors or omissions in the Shop Drawings, Product Data or Samples by the Designer's approval thereof.

The Contractor shall direct specific attention, in writing or on resubmitted Shop Drawings, Product Data or Samples, to revisions other than those requested by the Designer on previous submittals.

No portion of the Work requiring submission of a Shop Drawing, Product Data or Sample shall be commenced until the submittal has been approved by the Designer as provided in Subparagraph 2.2.14. All such portions of the Work shall be in accordance with approved submittals.

4.13 Use of Site

The Contractor shall confine operations at the site to areas permitted by law, ordinances, permits and the Contract Documents and shall not unreasonably encumber the site with any materials or equipment.

4.14 Cutting and Patching of Work

The Contractor shall be responsible for all cutting, fitting or patching that may be required to complete the Work or to make its several parts fit together properly.

The Contractor shall not damage or endanger any portion of the Work or the work of the Owner or any separate contractors by cutting, patching or otherwise altering any work, or by excavation. The Contractor shall not cut or otherwise alter the work of the Owner or any separate contractor except with the written consent of the Owner and of such separate contractor. The Contractor shall not unreasonably withhold from the Owner or any separate contractor his consent to cutting or otherwise altering the Work.

4.15 Cleaning Up

The Contractor at all times shall keep the premises free from accumulation of waste materials or rubbish caused by his operations. At the completion of the Work he shall remove all his waste materials and rubbish from and about the Project as well as all his tools, construction equipment, machinery and surplus materials.

If the Contractor fails to clean up at the completion of the Work, the Owner may do so as provided in Paragraph 3.4 and the cost thereof shall be charged to the Contractor.

4.16 Communications

The Contractor shall forward all communications to the Owner through the Designer except however a request for an appeal or notification of Work under protest must be sent to the Administrator, copy to Owner and Designer, by certified mail, return receipt requested.

Any such communications shall be in writing, addressed to the Awarding Authority and be considered given (1) if delivered to the office of the Designer: or (2) if in a sealed, postage prepaid envelope, addressed to the Awarding Authority c/o the Designer, deposited in the United State mail: or (3) if delivered prepaid to telegraph office for transmission to the Designer's office.

4.17 Royalties and Patents

The Contractor shall pay all royalties and license fees. He shall defend all suits or claims for infringement of any patent rights and shall save the Owner harmless from loss on account thereof, except that the Owner shall be responsible for all such loss when a particular design, process or the product of a particular manufacturer or manufacturers is specified, but if the Contractor has reason to believe that the design, process or product specified is an infringement of a patent, he shall be responsible for such loss unless he promptly gives such information to the Designer.

4.18 Indemnification

To the fullest extent permitted by law, the Contractor shall indemnify and hold harmless the Owner and the Designer and their Designers and employees from and against all claims, damages, losses and expenses, including but not limited to attorneys' fees, arising out of or resulting from the performance of the Work, provided that any such claim, damage, loss or expense (1) is attributable to bodily injury, sickness, disease or death, or to injury to or destruction of tangible property (other than the Work itself) including the loss of use resulting therefrom, and (2) is caused in whole or in part by any negligent act or omission of the Contractor, any Subcontractor, anyone directly or indirectly employed by any of them or anyone for whose acts any of them may be liable, regardless of whether or not it is caused in part by a party indemnified hereunder. Such obligation shall not be construed to negate, abridge, or otherwise reduce any other right or obligation of indemnity which would otherwise exist as to any party or person described in this Paragraph 4.18.

In any and all claims against the Owner or the Designer or any of their Designers or employees by any employee of the Contractor, any Subcontractor, anyone directly or indirectly employed by any of them or anyone for whose acts any of them may be liable, the indemnification obligation under this Paragraph 4.18 shall not be limited in any way by any limitation on the amount or type of damages, compensation or benefits payable by or or for the Contractor or any Subcontractor under worker's or workmen's compensation acts, disability benefit acts or other employee benefit acts.

The obligations of the Contractor under this Paragraph 4.18 shall not extend to the liability of the Designer, his Designers or employees arising out of (1) the preparation or approval of maps, drawings, opinions, reports, surveys, change orders, designs or specifications, or (2) the giving of or the failure to give directions or instructions by the Designer, his Designers or employees provided such giving or failure to give is the primary cause of the injury or damage.

5. **ARTICLE 5**

SUBCONTRACTORS

5.1 Definition

A Subcontractor is a person or entity who has a direct contract with the Contractor to perform any of the Work at the site. The term Subcontractor is referred to throughout the Contract Documents as if singular in number and masculine in gender and means a Subcontractor or his authorized representative. The term Subcontractor does not include any separate contractor or his subcontractors.

A Sub-subcontractor is a person or entity who has a direct or indirect contract with a Subcontractor to perform any of the Work at the site. The term Sub-subcontractor is referred to throughout the Contract Documents as if singular in number and masculine in gender and means a Sub-subcontractor or an authorized representative thereof.

5.2 Award of Subcontracts and Other Contracts For Portions of the Work

Unless otherwise required by the Contract Documents or the Bidding Documents, the Contractor, as soon as practicable after the award of the Contract, shall furnish to the Owner and the Designer in writing the names of the persons or entities (including those who are to furnish materials or equipment fabricated to a special design) proposed for each of the principal portions of the Work. The Designer will promptly reply to the Contractor in writing stating whether or not the Owner or the Designer, after due investigation, has reasonable objection to any such proposed person or entity. Failure of the Owner or Designer to reply promptly shall constitute notice of no reasonable objection.

The Contractor shall not contract with any such proposed person or entity to whom the Owner or the Designer has made reasonable objection under the provisions of Subparagraph

5.2.1. The Contractor shall not be required to contract with anyone to whom he has a reasonable objection.

If the Owner or the Designer has reasonable objection to any such proposed person or entity, the Contractor shall submit a substitute to whom the Owner or the Designer has no reasonable objection, and the Contract Sum shall be increased or decreased by the difference in cost occasioned by such substitution and an appropriate Change Order shall be issued; however, no increase in the Contract Sum shall be allowed for any such substitution unless the Contractor has acted promptly and responsively in submitting names as required by Subparagraph 5.2.1.

The Contractor shall make no substitution for any Subcontractor, person or entity previously selected if the Owner or Designer makes reasonable objection to such substitution.

Paragraphs 5.2.1. through 5.2.4 apply to any sub-trade included in Item 1 of the Form for General Bid.

The award of subcontracts for any sub-trade included in Item 2 of the Form for General Bid shall be in accordance with Chapter 149, Sections 44A to 44H, M.G.L.

5.3 Subcontractural Relations

By an appropriate agreement, written where legally required for validity, the Contractor shall require each Subcontractor, to the extent of the Work to be performed by the Subcontractor, to be bound to the Contractor by the terms of the Contract Documents, and to assume toward the Contractor all the obligations and responsibilities which the Contractor, by these Documents, assumes toward the Owner and the Designer. Said agreement shall preserve and protect the rights of the Owner and the Designer under the Contract Documents with respect to the Work to be performed by the Subcontractor so that the subcontracting thereof will not prejudice such rights, and shall allow to the Subcontractor, unless specifically provided otherwise in the Contractor-Subcontractor agreement, the benefit of all rights, remedies and redress against the Contractor that the Contractor, by these Documents, has against the Owner. Where appropriate, the Contractor shall require each Subcontractor to enter into similar agreements with his Subsubcontractors. The Contractor shall make available to each proposed Subcontractor, prior to the execution of the Subcontract, copies of the Contract Documents to which the Subcontractor will be bound by this Paragraph 5.3, and identify to the Subcontractor any terms and conditions of the proposed Subcontract which may be at variance with the Contract Documents. Each Subcontractor shall similarly make copies of such documents available to his Sub-subcontractors.

Paragraph 5.3.1 applies to Subcontractors for sub-trades included in Item 1 of the Form for General Bid.

The Contractor and each Subcontractor for a sub-trade listed in Item 2 of the form for General Bid shall execute a Subcontract in accordance with M.G.L. Chapter 149, Section 44F.

6 ARTICLE 6

WORK BY OWNER OR BY SEPARATE CONTRACTOR

6.1 Owner's Right to Perform Work and To Award Separate Contracts

The Owner reserves the right to perform work related to the Project with his own forces, and to award separate contracts in connection with other portions of the Project or other work on the site under these or similar Conditions of the Contract. If the Contractor claims that delay or additional cost is involved because of such action by the Owner, he shall make such claim as provided elsewhere in the Contract Documents.

When separate contracts are awarded for different portions of the Project or other work on the site, the term Contractor in the contract Documents in each case shall mean the Contractor who executes each separate Owner-Contractor Agreement.

The Owner will provide for the coordination of the work of his own forces and of each separate contractor with the Work of the Contractor, who shall cooperate therewith as provided in Paragraph 6.2.

6.2 Mutual Responsibility

The Contractor shall afford the Owner and separate contractors reasonable opportunity for the introduction and storage of their materials, and equipment and the execution of their work, and shall connect and coordinate his Work with theirs as required by the Contract Documents.

If any part of the Contractor's Work depends for proper execution or results upon the work of the Owner or any separate contractor, the Contractor shall, prior to proceeding with the Work, promptly report to the Designer any apparent discrepancies or defects in such other work that render it unsuitable for such proper execution and results, Failure of the Contractor so to report shall constitute an acceptance of the Owner's or separate contractor's work as fit and proper to receive his Work, except as to defects which may subsequently become apparent in such work by others.

Any costs cause by defective or ill-timed work shall be borne by the party responsible therefor.

Should the Contractor wrongfully cause damage to the work or property of the Owner, or to other work on the site, the contractor shall promptly remedy such damage as provided in Subparagraph 10.2.5.

Should the Contractor wrongfully cause damage to the work or property of any separate contractor, the Contractor shall upon due notice promptly attempt to settle with such other contractor by agreement, or otherwise to resolve the dispute. If such separate contractor sues the Owner on account of any damage alleged to have been caused by the Contractor, the Owner shall notify the Contractor who shall defend such proceedings at the Owner's expense, and if any

judgment or award against the Owner arises therefrom the Contractor shall pay or satisfy it and shall reimburse the Owner for all attorney's fees and court which the Owner has incurred.

Should the Contractor sustain damage through an act or omission of a subcontractor of any such separate contractor, the Contractor shall have no claim against the Owner for such damage.

The settlement of any claim set forth in the preceding subparagraphs 6.2.5 and 6.2.6 shall in no case be a cause for delays in the Work.

6.3 Owner's Right to Clean Up

If a dispute arises between the Contractor and separate contractors as to their responsibility for cleaning up as required by Paragraph 4.15, the Owner may clean up and charge the cost thereof to the contractors responsible therefor as the Designer shall determine to be just.

7 ARTICLE 7

MISCELLANEOUS PROVISIONS

7.1 Governing Law

The Contract shall be governed by the law of the place where the Project is located.

7.2 Successors and Assigns

The Owner and the Contractor each binds himself, his partners, successors, assigns and legal representatives to the other party hereto and to the partners, successors, assigns and legal representatives of such other party in respect to all covenants, agreements and obligations contained in the Contract Documents. Neither party to the Contract shall assign the Contract or sublet it as a whole without the written consent of the other, nor shall the Contractor assign any moneys due or to become due to him hereunder, without the previous written consent of the Owner.

7.3 Written Notice

Written notice shall be deemed to have been duly served if delivered in person to the individual or member of the firm or entity or to an officer of the corporation for whom it was intended, or if delivered at or sent by registered or certified mail to the last business address known to him who gives the notice.

7.4 Claims For Damages

Should either party to the Contract suffer injury or damage to person or property because of any act or omission of the other party or of any of his employees, Designers or others for

whose acts he is legally liable, claim shall be made in writing to such other party within a reasonable time after the first observance of such injury or damage.

7.5 Performance Bond and Labor And Material Payment Bond

The Owner shall have the right to require the Contractor to furnish bonds covering the faithful performance of the Contract and the payment of all obligations arising thereunder if and as required in the Bidding Documents or in the Contract Documents.

7.6 Rights And Remedies

The duties and obligations imposed by the Contract Documents and the rights and remedies available thereunder shall be in addition to and not a limitation of any duties, obligations, rights and remedies otherwise imposed or available by law.

No action or failure to act by the Owner, Designer or Contractor shall constitute a waiver of any right or duty afforded any of them under the Contract, nor shall any such action or failure to act constitute an approval of or acquiescence in any breach thereunder, except as may be specifically agreed in writing.

7.7 Tests

If the Contract Documents, laws, ordinances, rules, regulations or orders of any public authority having jurisdiction require any portion of the Work to be inspected, tested, or approved, the Contractor shall give the Designer timely notice of its readiness so the Designer may observe such inspection, testing or approval. The Contractor shall bear all costs of such inspections, tests or approvals conducted by public authorities. Unless otherwise provided, the Owner shall bear all costs of other inspections, tests or approvals.

If the Designer determines that any Work requires special inspection, testing or approval which Subparagraph 7.7.1 does not include, he will, upon written authorization from the Owner, instruct the Contractor to order such special inspection, testing or approval, and the Contractor shall give notice as provided in Subparagraph 7.7.1. If such special inspection or testing reveals a failure of the Work to comply with the requirements of the Contract Documents, the Contractor shall bear all costs thereof, including compensation for the Designer's additional services made necessary by such failure; otherwise the Owner shall bear such costs, and an appropriate Change Order shall be issued.

Required certificates of inspection, testing or approval shall be secured by the Contractor and promptly delivered by him to the Designer.

If the Designer is to observe the inspections, tests or approvals required by the Contract Documents, he will do so promptly and, where practicable, at the source of supply.

7.8 Interest

Payments due and unpaid under the Contract Documents shall bear interest from the date payment is due at such rate as the parties may agree upon in writing or, in the absence thereof, at the legal rate prevailing at the place of the Project.

7.9 Disputes

Claims, disputes, and other matters in question between the Contractor and the Owner arising out of, or relating to, the Contract Documents or the breach thereof, except as provided in Subparagraph 2.2.11 with respect to the Designer's decisions on matters relating to artistic effect, and except for claims which have been waived by the making or acceptance of final payment as provided by Subparagraph 9.9.4 and 9.9.5. shall be decided by the Designer subject to the right of appeal to the Administrator. If the Designer fails to render a decision within thirty calendar days after receiving written notice of claim, either party may request a written decision from the Administrator.

Appeal of an Designer's decision must be made directly to the Awarding Authority by certified mail (copy to the Designer and Owner) within twenty-one calendar days after the date on which the party making the appeal receives the Designer's written decision. Failure to appeal within this period will result in the Designer's decision becoming final and binding upon the Owner and the Contractor.

Appeal procedures shall be in conformance with M.G.L. Chapter 30, Section 39Q which provides as follows:

Dispute regarding changes in and interpretations of the terms or scope of the Contract and denials of or failures to act upon claims for payment for extra work or materials shall be resolved according to the following procedures, which shall constitute the exclusive method for resolving such disputes. Written notice of the matter in dispute shall be submitted promptly by the claimant to the chief executive official of the state agency which awarded the contract or his/her designee. No person or business entity having a contract with a state agency shall delay, suspend, or curtail performance under that contract as a result of any dispute subject to this section. Any disputed order, decision, or action by the agency or its authorized representative shall be fully performed or complied with pending resolution of the dispute.

Within thirty days of submission of the dispute to the chief executive official of the state agency or his/her designee, s/he shall issue a written decision stating the reasons therefor, and shall notify the parties of their right of appeal under this section. If the official or his/her designee is unable to issue a decision within thirty days, s/he shall notify the parties to the dispute in writing of the reasons why a decision cannot be issued within thirty days and of the date by which the decision shall issue. Failure to issue a decision within the thirty-day period of within the additional time period specified in such written notice shall be deemed to constitute a denial of the claim and shall authorize resort to the appeal procedure described below. The decision of the chief executive official or his/her designee shall be final and conclusive unless an appeal is taken as provided below.

Within twenty-one calendar days of the receipt of a written decision or of the failure to issue a decision as stated in the preceding subparagraph, any aggrieved party may file a notice of claim for an adjudicatory hearing with the division of hearing officers or if the amount in controversy exceeds ten thousand dollars in lieu of appealing the decision of the chief executive official, the aggrieved party may file an action directly in a court of competent jurisdiction and shall serve copies thereof upon all other parties in the form and manner prescribed by the rules governing the conduct of adjudicatory proceedings of the division of hearing officers. The appeal shall be referred to a hearing officer experienced in construction law and shall be prosecuted in accordance with the formal rules of procedure for the conduct of adjudicatory hearings of the division of hearing officers, except as provided below. The hearing officer shall issue a final decision as expeditiously as possible, but in no event more than one hundred and twenty calendar days after conclusion of the adjudicatory hearings, unless the decision is delayed by a request for extension of time for filing post-hearing briefs or other submissions assented to by all parties. Whenever, because an extension of time has been granted, the hearing officer is unable to issue a decision within one hundred and twenty days, s/he shall notify all parties of the reasons for the delay and the date when the decision will issue. Failure to issue a decision with in the one hundred and twenty-day period or within the additional period specified in such written notice shall give the petitioner the right to pursue any legal remedies available to him/her without further delay.

When the amount in dispute is less then ten thousand dollars, a contractor who is party to the dispute may elect to submit the appeal to a hearing officer experienced in construction law for expedited hearing in accordance with the informal rules of practice and procedure of the division of hearing officers. An expedited hearing under this subparagraph shall be available at the sole option of the contractor. The hearing officer shall issue a decision no later than sixty days following the conclusion of any hearing conducted pursuant to this subparagraph. The hearing officer's decision shall be final and conclusive, and shall not be set aside except in cases of fraud.

The Contractor shall proceed with the disputed Work as directed by the Designer. Notice must be given to the Project Representative by the Contractor's superintendent every day that disputed Work is to be performed. Accurate records of the nature and extent of the disputed Work and of the time spent and equipment used on the disputed Work shall be maintained by the superintendent and verified daily by the Project Representative.

7.10 Record Keeping and Management Controls

The Contractor shall make and retain for at least six years after final payment records which reflect the transactions and dispositions of the firm in accordance with the requirements of M.G.L. Chapter 30, Section 39R (b).

These records and the subcontractor's records pertaining to this Contract shall be available for examination by the Owner, Awarding Authority, Division of Capital Planning and Operations, and Inspector General for six years after final payment.

Prior to execution of the Contract the Contractor shall submit a statement of management on internal accounting controls to the Owner in conformance with M.G.L. Chapter 30, Section 39R (c). The system of controls must reasonably assure that:

transactions are executed in accordance with management's general and specific authorization:

the transactions are recorded as necessary to permit preparation of financial statements in conformity with generally accepted accounting principles and to maintain accountability for asset:

access to assets is permitted only in accordance with management's authorization: and

the recorded accountability for assets is compared with existing assets at reasonable intervals and appropriate action was taken with respect to any difference.

The statement of management on internal accounting controls must have been reviewed by an independent certified public accountant (CPA), and that CPA shall file a statement with the Owner in conformance with the requirements of M.G.L. Chapter 30, Section 39R (c). The CPA's statements must:

state that the internal accounting controls statement was examined:

express an opinion as to whether management's statement of internal accounting controls is consistent with management's evaluation of the system of internal accounting controls; and

express an opinion as to whether the statement is reasonable with respect to transactions and assets of material amounts in the context of the firm's overall financial picture.

The Contractor shall submit to the Owner annually during the term of the Contract a financial statement prepared by an independent CPA. This statement shall be based on an audit of the firm's records in accordance with the requirements of M.G.L. Chapter 30, Section 39R (a) (5). The financial statement shall be accompanied by an accountant's report in accordance with the requirements of M.G.L. Chapter 30, Section 39R (a) (6) stating:

the scope of the audit made by the CPA and

the CPA's opinion of the financial statement as a whole and exceptions and qualifications to that opinion or

The CPA's statement, with reasons, that an overall opinion cannot be expressed.

The accountant's report shall include a signed statement by the responsible corporate officer attesting that all material facts were disclosed to the CPA and that the financial statement is a true and complete statement of financial condition.

Changes in the method of record keeping which materially affect any of the statements required by Subparagraph 7.10.3 through 7.10.5 shall be reported to the Owner. State the change, the reason for it, and the date of the change. Include a statement from the CPA approving or commenting on the change in conformance with M.G.L. Chapter 30, Section 39R (b) (3).

Subparagraph 7.10.3 through 7.10.6 shall apply only to filed subcontractors and general contractors whose contracts exceed $100,000.

8 **ARTICLE 8**

TIME

8.1 Definitions

Unless otherwise provided, the Contract Time is the period of time allotted in the Contract Documents for Substantial Completion of the Work as defined in Subparagraph 8.1.3., including authorized adjustments thereto.

The date of commencement of the Work is the date established in a notice to proceed. If there is no notice to proceed, it shall be the date of the Owner-Contractor Agreement or such other date as may be established therein.

The Date of Substantial Completion of the Work or designated portion thereof is the Date certified by the Designer when construction is sufficiently complete, in accordance with the Contract Documents, so the Owner can occupy or utilize the Work or designated portion thereof for the use for which it is intended.

The term day as used in the Contract Documents shall mean calendar day unless otherwise specifically designated.

8.2 Progress and Completion

All time limits stated in the Contract Documents are of the essence of the Contract.

The Contractor shall begin the Work on the date of commencement as defined in Subparagraph 8.1.2. He shall carry the Work forward expeditiously with adequate forces and shall achieve Substantial Completion within the Contract Time.

8.3 Delays and Extension of Time

If the Contractor is delayed at any time in the progress of the Work by any act or neglect of the Owner or the Designer, or by any employee of either, or by any separate contractor employed by the Owner, or by changes ordered in the Work, or by labor disputes, fire unusual delay in transportation, adverse weather conditions not reasonably anticipatable, unavoidable casualties, or any causes beyond the Contractor's control, or by delay authorized by the Owner

pending appeal to and decision by the Administrator", or by any other cause which the Designer determines may justify the delay, then the Contract Time shall be extended by Change Order for such reasonable time as the Designer may determine.

Any claim for extension of time shall be made in writing to the Designer not more than twenty days after the commencement of the delay; otherwise it shall be waived. In the case of a continuing delay only one claim is necessary. The Contractor shall provide an estimate of the probable effect of such delay on the progress of the Work.

If no agreement is made stating the dates upon which interpretations as provided in Subparagraph 2.2.8 shall be furnished, then no claim for delay shall be allowed on account of failure to furnish such interpretations until fifteen days after written request is made for them, and not then unless such claim is reasonable.

This Paragraph 8.3 does not exclude the recovery of damages for delay by either party under other provisions of the Contract Documents.

The Contractor and the Surety of the Contractor's performance bond shall be jointly and severally liable for, and shall pay to the Owner the expenses for inspection of Work performed after the time stipulated in the Owner-Contractor Agreement for Substantial Completion. Such inspection costs shall include fees paid to the Designer as extra services at the rate stipulated in the Contract for Designerural Services between the Owner and the Designer, the costs of the Project Representative at the current salary rate and any other direct expenses due to inspection. In no case, however, shall the total amount of inspection costs exceed an aggregate total computed at the rate of two hundred dollars per day. The Owner may retain from monies otherwise due the Contractor whatever sums accrue to the Owner pursuant to this provision. The Contractor shall not be liable for inspection costs for delay in performance as provided hereunder for any period for which an extension of the Contract Time has been granted pursuant to the provisions of Subparagraph 8.3.1.

9. **ARTICLE 9**

PAYMENTS AND COMPLETION

9.1 Contract Sum

The Contract Sum is stated in the Owner-Contract Agreement and, including authorized adjustments thereto, is the total amount payable by the Owner to the Contractor for the performance of the Work under the Contract Documents.

9.2 Schedule of Values

Before the first Application for Payment, the Contractor shall submit to the Designer a schedule of values allocated to the various portions of the Work, prepared in such form and supported by such data to substantiate its accuracy as the Designer may require. This schedule,

unless objected to by the Designer, shall be used only as a basis for the Contractor's Applications for Payment.

The Schedule of Values shall contain a separate item for each Section of these Specifications broken down in such form as the Designer may require. Each item in the schedule of values shall include its proper share of overhead and profit.

9.3 Application for Payment

Once each month, on a date established at the beginning of the Work, the Contractor shall deliver to the Designer by hand or by registered or certified mail with return receipt an itemized Application for Payment, supported by such data substantiating the Contractor's right to payment as the Designer may require, and reflecting retainage as provided in Paragraph 9.5 as supplemented. Such Application for Payment shall be submitted on a form supplied by the Designer. The form shall show separately:

(1) The value of Labor and materials incorporated in the Work.

(2) The value, kind, and quantity of each item of material or equipment not incorporated in the Work but delivered and suitably stored at some other location agreed upon in writing.

(3) The value, kind, and quantity of each item of material or equipment not incorporated in the Work but suitably stored at some other location agreed upon in writing.

(4) All Change Orders approved up to the date of the Application for Payment.

In no event may materials or equipment be deemed delivered and suitably stored at the site (or at some other location agreed upon in writing), unless the following requirements are met:

The materials or equipment are ready for an actually scheduled for prompt use, as so-called stockpiling is expressly forbidden, except as otherwise specified or permitted by the Designer.

The materials or equipment meet the requirements of the Contract Documents and required submittals have been approved by the Designer.

The Contractor can and will adequately protect the materials or equipment until they are incorporated in the Work.

The Contractor will pay storage charges and related expenses if materials or equipment are stored at some other location agreed upon in writing.

9.4 Certificates For Payment

The Designer will, within seven days after the receipts of the Contractor's Application for Payment, either issue a Certificate for Payment to the Owner, with a copy to the Contractor, for such amount as the Designer determines is properly due, or notify the Contractor in writing his reasons for withholding a Certificate as provided in Subparagraph 9.6.1.

The issuance of a Certificate for Payment will constitute a representation by the Designer to the Owner, based on his observations at the site as provided in Sub-paragraph 2.2.3 and the data comprising the Application for Payment, that the Work has progressed to the point indicated; that, to the best of his knowledge, information and belief, the quality of the Work is in accordance with the Contract Documents (subject to an evaluation of the Work for conformance with the Contract Documents upon Substantial Completion, to the results of any subsequent tests required by or performed under the Contract Documents, to minor deviations from the Contract Documents, correctable prior to completion, and to any specific qualifications stated in his Certificate); and that the contractor is entitled to payment in the amount certified. However, by issuing a Certificate for Payment, the Designer shall not thereby; be deemed to represent that he has made exhaustive or continuous on-site inspections to check the quality or quantity of the Work or that he has reviewed the construction means, methods, techniques, sequences or procedures, or that he has made any examination to ascertain how or for what purpose the Contractor has used the moneys previously paid on account of the Contract Sum.

9.5 Progress Payments

After the Designer has issued a Certificate for Payment, the Owner shall make payment in the manner and within the time provided in the Contract Documents.

The Contractor shall promptly pay each Subcontractor, upon receipt of payment from the Owner, out of the amount paid to the Contractor on account of such Subcontractor's Work, the amount to which said Subcontractor is entitled, reflecting the percentage actually retained, if any, from payments to the Contractor on account of such Subcontractor's Work. The Contractor shall, by an appropriate agreement with each Subcontractor, require each Subcontractor to make payments to his Sub-subcontractors in similar manner.

The Designer may, on request and at his discretion, furnish to any Subcontractor, if practicable, information regarding the percentages of completion or the amounts applied for by the Contractor and the action taken thereon by the Designer on account of Work done by such Subcontractor.

Neither the Owner nor the Designer shall have any obligation to pay or to see to the payment of any moneys to any Subcontractor except as may otherwise be required by law.

No Certificate for a progress payment, nor any progress payment, nor any partial or entire use or
occupancy of the Project by the Owner, shall constitute an acceptance of any Work not in accordance
with the Contract Documents.

After the Designer has issued a Certificate for Payment the Owner shall make payment to the Contractor in accordance with Section 39K of Chapter 30 of the General Laws which provides as follows:

Within 15 days after receipt from the Contractor, at the place designated by the awarding authority if such a place is so designated, of a periodic estimate requesting payment of the amount due for the preceding month, the Awarding Authority will make a periodic payment to the Contractor for the Work performed during the preceding month and for the materials not incorporated in the Work but delivered and suitably stored at the site (or at some location agreed upon in writing) to which the Contractor has title or to which a subcontractor has title and has authorized the Contractor to transfer title to the awarding Authority, less (1) a retention based on its estimate of the fair value of its claims against the Contractor and less (2) a retention for direct payments to Subcontractors based on demands for same in accordance with the provisions of Section 39 F. and less (3) a retention not exceeding five percent (5%) of the approved amount of the periodic payment. After the receipt of a periodic estimate requesting final payment and within 65 days after (a) the Contractor fully completes the Work or substantially completes the work so that the value of the work remaining to be done is, in the estimate of the Awarding Authority, less than one percent (1%) of the original Contract price, or (b) the Contractor substantially completes the Work and the Awarding Authority takes possession for occupancy, whichever occurs first, the Awarding Authority shall pay the Contractor the entire balance due on the Contract less, (1) a retention based on its estimate of the fair value of its claims against the Contractor and of the cost of completing the incomplete and unsatisfactory items of Work less (2) a retention for direct payments to Subcontractors based on demands for same in accordance with the provisions of Section 39 F, or based on the record of payments by the Contractor to the Subcontractors under this Contract if such record of payment indicates that the Contractor has not paid Subcontractors as provided in Section 39 F. If the Awarding Authority fails to make payment as herein provided, there shall be added to each such payment daily interest at the rate of three percentage points above the rediscount rate than charged by the Federal Reserve Bank of Boston commencing on the first day after said payment is due and continuing until the payment is delivered or mailed to the Contractor; provided, that no interest shall be due, in any event, on the amount due on a periodic estimate for final payment until fifteen days after receipt of such a periodic estimate form the Contractor, at the place designated by the Awarding Authority if such a place is so designated. The Contractor agrees to pay to each Subcontractor a portion of any such interest paid in accordance with the amount due each Subcontractor.

The Contractor shall make payments to filed Subcontractors and to other Subcontractors as defined in following Subparagraph 9.5.8 in accordance with Section 39F of Chapter 30 of the General Laws which provides as follows:

(a) Forthwith after the Contractor receives payment on account of a periodic estimate, the Contractor shall pay to each Subcontractor the amount paid for the labor performed and the materials furnished by the Subcontractor, less any amount specified in any court proceedings barring such payment and also less any amount claimed due from the Subcontractor by the Contractor.

(b) Not later than the 65th day after each Subcontractor substantially completes his Work in accordance with the plans and specifications, the entire balance due under the subcontract less amounts retained by the Awarding Authority as the estimated costs of completing the incomplete and unsatisfactory items of Work, shall be due the Subcontractor; and the Awarding Authority shall pay that amount to the Contractor. The Contractor shall forthwith pay to the Subcontractor the full amount received from the Awarding Authority less any amount specified in any court proceedings barring such payment and also less any amount claimed due from the Subcontractor by the Contractor.

(c) Each payment made by the Awarding Authority to the Contractor pursuant to subparagraphs (a) and (b) of this paragraph for the labor performed and the materials furnished by a subcontractor shall be made to the Contractor for the account of that Subcontractor; and the Awarding Authority shall take reasonable steps to compel the Contractor to make each such payment to each such Subcontractor. If the Awarding Authority has received a demand for direct payment from a Subcontractor for any amount which has already been included in a payment to the Contractor or which is to be included in a payment to the Contractor for payment to the Subcontractor as provided in subparagraphs (a) and (b), the Awarding Authority shall act upon the demand as provided in this section.

(d) If, within 70 days after the Subcontractor has substantially completed the Subcontract Work, the Subcontractor has not received from the Contractor the balance due under the Subcontract including any amount due for extra labor and materials furnished to the Contractor, less any amount retained by the Awarding Authority as the estimated costs of completing the incomplete and unsatisfactory items of Work, the Subcontractor may demand direct payment of that balance from the Awarding Authority. The demand shall be by a sworn statement delivered to or sent by certified mail to the Awarding Authority, and a copy be valid even if delivered or mailed prior to the seventieth day after the Subcontractor has substantially completed the Subcontract Work. Within ten days after the Subcontractor has delivered or so mailed a copy to the Contractor, the Contractor may reply to the demand. The reply shall be by a sworn statement delivered to or sent by certified mail to the Awarding Authority and a copy shall be delivered to or sent by certified mail to the Subcontractor at the same time. The reply shall contain a detailed breakdown of the balance due under the Subcontract including any amount due for extra labor and materials furnished to the Contractor and of the amount due for extra labor and materials furnished to the Contractor and of the amount due for each claim made by the Contractor against the Subcontractor.

(e) Within 15 days after receipt of the demand by the Awarding Authority, but in no event prior to the 70th day after substantial completion of the Subcontract Work, the Awarding Authority shall make direct payment to the Subcontractor of the balance due under the Subcontract including any amount due for extra labor and materials furnished to the Contractor, less any amount (i) retained by the Community Action as the estimated cost of completing the incomplete or unsatisfactory items of Work, (ii) specified in any court proceedings barring such payment, or (iii) disputed by the Contractor in the sworn reply; provided, that the Awarding Authority shall not deduct from a direct payment any amount as provided in part (iii) if the reply is not sworn to, or for which the sworn reply does not contain the detailed breakdown required by subparagraph (d).

The Awarding Authority shall make further direct payments to the Subcontractor forthwith after the removal of the basis for deductions from direct payments made as provided in part (i) and (ii) of this subparagraph.

(f) The Awarding Authority shall forthwith deposit the amount deducted from a direct payment as provided in part (iii) of subparagraph (e) in an interest-bearing joint account in the names of the Contractor and the Subcontractor in a bank in Massachusetts selected by the Awarding Authority or agreed upon by the contractor and the Subcontractor and shall notify the Contractor and the Subcontractor of the date of the deposit and the bank receiving the deposit. The bank shall pay the amount in the account, including accrued interest, as provided in an agreement between the Contractor and the Subcontractor or as determined by decree of a court of competent jurisdiction.

(g) All direct payments and all deductions from demands for direct payments deposited in an interest-bearing account or accounts in a bank pursuant to subparagraph (f) shall be made out of amounts payable to the general Contractor at the time of receipt of a demand for direct payment from a Subcontractor and out of amounts which later become payable to the Contractor and in order of receipt of such demands from Subcontractors. All direct payments shall discharge the obligation of the Awarding Authority to the Contractor to the extent of such payment.

(h) The Awarding Authority shall deduct from payments to the Contractor amounts which, together with the deposits in interest-bearing accounts pursuant to subparagraph (f), are sufficient to satisfy all unpaid balances of demands for direct payment received from Subcontractors. All such amounts shall be earmarked for such direct payments, and the Subcontractors shall have a right to such deductions prior to any claims against such amounts by creditors of the Contractor.

(i) If the Subcontractor does not receive payment as provided in subparagraph (a) or if the Contractor does not submit a periodic estimate for the value of the labor and materials performed or furnished by the Subcontractor and the Subcontractor does not receive payment for same when due less the deductions provided for in subparagraph (a), the Subcontractor may demand direct payment by following the procedure in subparagraph (d) and the Contractor may file a sworn reply as provided in that same subparagraph. A demand made after the first day of the month following that for which the Subcontractor performed or furnished the labor and materials for which the Subcontractor seeks payment shall be valid even if delivered or mailed prior to the time payment was due on a periodic estimate from the Contractor. Thereafter the Awarding Authority shall proceed as provided in subparagraph (e), (f), (g), and (h).

Pursuant to section 39F of Chapter 30 of the Laws, the term "Subcontractor" as used in preceding Subparagraph 9.5.7 shall mean a person who files a sub-bid and receives a Subcontract as a result of that filed sub-bid or who is approved by the Awarding Authority in writing as a person performing labor or both performing labor and furnishing materials pursuant to a contract with the Contractor.

9.6 Payments Withheld

The Designer may decline to certify payment and may withhold his Certificate in whole or in part, to the extent necessary reasonably to protect the Owner, if in his opinion he is unable to make representations to the Owner as provided in Subparagraph 9.4.2. If the Designer is unable to make representations to the Owner as provided in Subparagraph 9.4.2 and to certify payment in the amount of the Application, he will notify the Contractor as provided in Subparagraph 9.4.1. If the Contractor and the Designer cannot agree on a revised amount, the Designer will promptly issue a Certificate for Payment for the amount for which he is able to make such representations to the Owner. Subject to the provisions of Subparagraph 9.6.3 herein below, the Designer may also decline to certify payment or, because of subsequently discovered evidence or subsequent observations, he may nullify the whole or any part of any Certificate for Payment previously issued to such extent as may be necessary in his opinion to protect the Owner from loss because of:

.1 defective Work not remedied

.2 third party claims filed or reasonable evidence indicating probable filing of such claims,

.3 failure of the contractor to make payments properly to Subcontractors or for labor, materials or equipment,

.4 reasonable evidence that the Work cannot be completed for the unpaid balance of the Contract Sum,

.5 damage to the Owner or another contractor,

.6 reasonable evidence that the Work will not be completed within the Contract Time, or

.7 persistent failure to carry out the Work in accordance with the Contract Documents.

When the above grounds in Subparagraph 9.6.1 are removed, payment shall be made for amounts withheld because of them.

The Awarding Authority may make changes in any periodic estimate submitted by the Contractor in accordance with Section 39K of Chapter 30 of the General Laws, and the payment due on said periodic estimate shall be computed in accordance with the changes so made. The provisions of said Section 39K shall govern payments pursuant to periodic estimates on which the Awarding Authority has made changes. The Designer shall mark the date of receipt on the estimate.

9.7 Failure of Payment

If the Owner fails to make payments as set forth in Section 39K of Chapter 30, the Contractor shall be compensated as set forth in said Section.

9.8 Substantial Completion

When the Contractor considers that the Work, or a designated portion thereof which is acceptable to the Owner, is substantially complete as defined in Subparagraph 8.1.3, the Contractor shall prepare for submission to the Designer a list of items to be completed or corrected. The failure to include any items on such list does not alter the responsibility of the Contractor to complete all Work in accordance with the Contract Documents. When the Designer on the basis of an inspection determines that the Work or designated portion therefor is substantially complete, he will then prepare a Certificate of Substantial Completion which shall establish the Date of Substantial Completion, shall state the responsibilities of the Owner and the Contractor for security, maintenance, heat, utilities, damage to the Work, and insurance, and shall fix the time within which the Contractor shall complete the items listed therein. Warranties required by the Contract Documents shall commence on the Date of Substantial Completion of the Work or designated portion thereof unless otherwise provided in the Certificate of Substantial Completion. The Certificate of Substantial Completion shall be submitted to the Owner and the Contractor for their written acceptance of the responsibilities assigned to them in such Certificate.

Upon substantial Completion of the Work or designated portion thereof and upon application by the Contractor and certification by the Designer, the Owner shall make payment, reflecting adjustment in retainage, if any, for such Work or portion thereof, as provided in the Contract Documents.

9.9 Final Completion and Final Payment

Upon receipt of written notice that the work is ready for final inspection and acceptance and upon receipt of a final Application for Payment, the Designer will promptly make such inspection and, when he finds the Work acceptable under the Contract Documents and the Contract fully performed, he will promptly issue a final Certificate for Payment stating that to the best of his knowledge, information and belief, and on the basis of his observations and inspections, the Work has been completed in accordance with the terms and conditions of the Contract Documents and that the entire balance found to be due the Contractor, and noted in said final Certificate, is due and payable. The Designer's final Certificate for Payment will constitute a further representation that the conditions precedent to the Contractor's being entitled to final payment as set forth in Subparagraph 9.9.2 have been fulfilled. Final payment shall be made in accordance with section 39K of Chapter 30, quoted in Subparagraph 9.5.6 hereinabove, which Section takes precedence over any contradictory provisions of Paragraph 9.9.

Neither the final payment nor the remaining retained percentage shall become due until the Contractor submits to the Designer (1) an affidavit that all payrolls, bills for materials and equipment, and other indebtedness connected with the Work for which the Owner or his property might in any way be responsible, have been paid or otherwise satisfied, (2) consent of surety, if any, to final payment and (3), if required by the Owner, other data establishing payment or satisfaction of all such obligations, such as receipts, releases and waivers of liens arising out of the Contract, to the extent and in such form as may be designated by the Owner. If any Subcontractor refuses to furnish a release or waiver required by the Owner, the Contractor may furnish a bond satisfactory to the Owner to indemnify him against any such lien. If any such lien remains unsatisfied after all payments are made, the Contractor shall refund to the Owner all

moneys that the latter may be compelled to pay in discharging such lien, including all costs and reasonable attorneys' fees. The affidavit and consent of surety shall be submitted on AIA forms G706 "Contractor's Affidavit of Payment of Debts and Claims" and G707 "Consent of Surety Company to Final Payment".

If, after Substantial Completion of the Work, final completion thereof is materially delayed through no fault of the Contractor or by the issuance of Change Orders affecting final completion, and the Designer so confirms, the Owner shall, upon application by the Contractor and certification by the Designer, and without terminating the Contract, make payment of the balance due for that portion of the Work fully completed and accepted. If the remaining balance for Work not fully completed or corrected is less than the retainage stipulated in the Contract Documents, and if bonds have been furnished as provided in Paragraph 7.5, the written consent of the surety to the payment of the balance due for that portion of the Work fully completed and accepted shall be submitted by the Contractor to the Designer prior to certification of such payment. Such payment shall be made under the terms and conditions governing final payment, except that it shall not constitute a waiver of claims.

The making of final payment shall constitute a waiver of all claims by the Owner except those arising from:

.1 unsettled liens,

.2 faulty or defective Work appearing after Substantial Completion,

.3 failure of the Work to comply with the requirements of the Contract Documents, or

.4 terms of any special warranties required by the Contract Documents.

The acceptance of final payment shall constitute a waiver of all claims by the Contractor except those previously made in writing and identified by the Contractor as unsettled at the time of the final Application for Payment.

10. **ARTICLE 10**

PROTECTION OF PERSONS AND PROPERTY

10.1 Safety Precautions and Programs

The Contractor shall be responsible for initiating, maintaining and supervising all safety precautions and programs in connection with the Work.

10.2 Safety of Persons and Property

The Contractor shall take all reasonable precautions for the safety of, and shall provide all reasonable protection to prevent damage, injury or loss to:

.1 all employees on the Work and all other persons who may be affected thereby;

.2 all the Work and all materials and equipment to be incorporated therein, whether in storage on or off the site, under the care, custody or control of the Contractor or any of his Subcontractors or Sub-subcontractors; and

.3 other property at the site or adjacent thereto, including trees, shrubs, lawns, walks, pavements, roadways, structures and utilities not designated for removal, relocation or replacement in the course of construction.

The Contractor shall give all notices and comply with all applicable laws, ordinances, rules, regulations and lawful orders of any public authority bearing on the safety of persons or property or their protection from damage, injury or loss.

The Contractor shall erect and maintain, as required by existing conditions and progress of the Work, all reasonable safeguards for safety and protection, including posting danger signs and other warnings against hazards, promulgating safety regulations and notifying owners and users of adjacent utilities.

When the use or storage of explosives or other hazardous materials or equipment is necessary for the execution of the Work, the Contractor shall exercise the utmost care and shall carry on such activities under the supervision of properly qualified personnel.

The Contractor shall promptly remedy all damage or loss (other than damage or loss insured under Paragraph 11.3) to any property referred to in Clauses 10.2.1.2 and 10.2.1.3 caused in whole or in part by the Contractor, any Subcontractor, any Sub-subcontractor, or anyone directly or indirectly employed by any of them, or by anyone for whose acts any of them may be liable and for which the Contractor is responsible under Clauses 10.2.1.2 and 10.2.1.3 except damage or loss attributable to the acts or omissions of the Owner or Designer or anyone directly or indirectly employed by either of them, or by anyone for whose acts either of them may be liable, and not attributable to the fault or negligence of the Contractor. The foregoing obligations of the Contractor are in addition to his obligations under Paragraph 4.18.

The Contractor shall designate a responsible member of his organization at the site whose duty shall be the prevention of accidents. This person shall be the Contractor's superintendent unless otherwise designated by the Contractor in writing to the Owner and the Designer.

The Contractor shall not load or permit any part of the Work to be loaded so as to endanger its safety.

10.3 Emergencies

In any emergency affecting the safety of persons or property, the Contractor shall act, at his discretion, to prevent threatened damage, injury or loss. Any additional compensation or extension of time claimed by the Contractor on account of emergency work shall be determined as provided in Article 12 for Changes in the Work.

11. **ARTICLE 11**

INSURANCE

11.1 Contractor's Liability Insurance

The Contractor shall purchase and maintain such insurance as will protect him from claims set forth below which may arise out of or result from the Contractor's operations under the Contract, whether such operations be by himself or by any Subcontractor or by anyone directly or indirectly employed by any of them, or by anyone for whose acts any of them may be liable:

.1 claims under workers' or workmen's compensation, disability benefit and other similar employee benefit acts;
.2 claims for damages because of bodily injury, occupational sickness or disease, or death of his employees;

.3 claims for damages because of bodily injury, sickness or disease, or death of any person other than his employees;

.4 claims for damages insured by usual personal injury liability coverage which are sustained (1) by any person as a result of an offense directly or indirectly related to the employment of such person by the Contractor, or (2) by any other person;

.5 claims for damages, other than to the Work itself, because of injury to or destruction of tangible property, including loss of use resulting therefrom; and

.6 claims for damages because of bodily injury or death of any person or property damage arising out of the ownership, maintenance or use of any motor vehicle.

The insurance required by Subparagraph 11.1.1 shall be taken out in a company or companies authorized to do such business in the Commonwealth of Massachusetts and satisfactory to the Owner and Awarding Authority and shall be written for not less than any limits of liability specified herein below, or required by law, whichever is greater.

Workmen's Compensation and other benefits as required under Chapter 152 of the Laws, as amended, and Section 34A of Chapter 149 of the General Laws.

Employer's liability with a limit of at least $300,000 each accident.

Comprehensive Public Liability including Contractor's Liability as applicable to the Contractor's obligations under Paragraph 4.18; Elevators (if any on the Work): Completed Operations and Products Liability: all on the occurrence basis with Personal Injury coverage and Broad Form Property Damage. Remove the XCU exclusions relating to Explosion, Collapse, and

Underground Property Damage. Completed Operations Liability shall be kept in force for at least two years after the date of final completion.

Personal Injury and Accidental Death

Each person	$300,000
	$1,000,000

Property Damage

Each Occurrence	$300,000
Aggregate per 12 months	$1,000,000

Property Damage

Each Person	$100,000

The insurance required by Subparagraph 11.1.1 shall include contractual liability insurance applicable to the Contractor's obligations under Paragraph 4.18.

Certificates of Insurance acceptable to the Owner shall be submitted to the Owner simultaneously with the execution of the Contract. Certificates shall indicate that Contractual Liability coverage is in force, as well as deletions of the XCU exclusions. These Certificates shall contain a provision that the insurance company will notify the Owner by registered mail at least 30 days in advance of any cancellation, change, or expiration of the policies.

11.2 Owner's Liability Insurance

The Owner shall be named as an additional insured on the Contractor's Liability Insurance Policies.

11.3 Property Insurance

The Contractor shall purchase and maintain property insurance upon the entire Work at the site to the full insurable value thereof. This insurance shall be taken out in a company or companies against which the Owner has no reasonable objection and shall include the interests of the Owner, the Contractor, Subcontractors and Sub Subcontractors and shall insure against the perils of fire and extended coverage and shall include "all risks" insurance for physical loss or damage including, without duplication, theft, vandalism and malicious mischief. The insurance shall also cover portions of the Work stored off the site or in transit which are included in an Application for Payment under Subparagraph 9.3.2. If this insurance is written with stipulated amounts deductible, the Owner shall not be responsible for any difference between the payments made by the insurance carrier and the claim.

The Contractor shall purchase and maintain such boiler and machinery insurance as may be required by the Contract Documents or by law. This insurance shall include the interests of the Owner, the Contract, Subcontractors and Sub-subcontractors in the Work.

Any loss insured under Subparagraph 11.3.1 is to be adjusted with the Owner and made payable to the Owner as trustee for the insureds, as their interests may appear, subject to the requirements of any applicable mortgagee clause and of Subparagraph 11.3.8. The Contractor shall pay each Subcontractor a just share of any insurance moneys received by the Contractor, and by appropriate agreement, written where legally required for validity, shall required each Subcontractor to make payments to his Sub-subcontractors in similar manner.

The Contractor shall file the original and one certified copy of all policies with the Owner before exposure to loss may occur. If the Owner is damaged by the failure of the Contractor to maintain such insurance and to so notify the Owner, then the Contractor shall bear all reasonable costs properly attributable thereto.

(intentionally deleted)

The Owner and Contractor waive all rights against (1) each other and the Subcontractors, Sub-subcontractors, Designers and employees each of the other, and (2) the Designer and separate contractors, if any, and their subcontractors, sub-subcontractors, Designers and employees, for damages caused by fire or other perils to the extent covered by insurance obtained pursuant to this Paragraph 11.3 or any other property insurance applicable to the Work, except such rights as they may have to the proceeds of such insurance held by the Owner as trustee. The foregoing waiver afforded the Designer, his Designers and employees shall not extend to the liability imposed by Subparagraph 4.18.3. The Owner or the Contractor, as appropriate, shall require of the Designer, separate contractors, Subcontractors and Sub-subcontractors by appropriate agreements, written where legally required for validity, similar waivers each in favor of all other parties enumerated in this Subparagraph 11.3.6.

If required in writing by any party in interest, the Owner as trustee shall, upon the occurrence of an insured loss, give bond for the proper performance of his duties. He shall deposit in a separate account any money so received, and he shall distribute it in accordance with such agreement as the parties in interest may reach, or in accordance with an award by arbitration in which case the procedure shall be as provided in Paragraph 7.9. If after such loss no other special agreement is made, replacement of damaged work shall be covered by an appropriate Change Order.

The Owner as trustee shall have power to adjust and settle any loss with the insurers unless one the of parties in interest shall object in writing within five days after the occurrence of loss to the Owner's exercise of this power, and if such objection be made, arbitrators shall be chosen as provided in Paragraph 7.9. The Owner as trustee shall, in that case, make settlement with the insurers in accordance with the directions of such arbitrators. If distribution of the insurance proceeds by arbitration is required, the arbitrators will direct such distribution.

If the Owner finds it necessary to occupy or use a portion or portions of the Work prior to Substantial Completion thereof, such occupancy or use shall not commence prior to a time mutually agreed to by the Owner and Contractor and to which the insurance company or companies providing the property insurance have consented by endorsement to the policy or

policies. This insurance shall not be cancelled or lapsed on account of such partial occupancy or use. Consent of the Contractor and of the insurance company or companies to such occupancy or use shall not be unreasonably withheld.

11.4 Loss of Use Insurance

The Owner, at his option, may purchase and maintain such insurance as will insure him against loss of use of his property due to fire or other hazards, however caused. The Owner waives all rights of action against the Contractor for loss of use of his property, including consequential losses due to fire or other hazards however caused, to the extent covered by insurance under this Paragraph 11.4.

12 ARTICLE 12

CHANGES IN THE WORK

12.1 Change Orders

A Change Order is a written order to the Contractor signed by the Owner and the Designer, issued after execution of the Contract, authorizing a change in the Work or an adjustment in the Contract Sum or the Contract Time. The Contract Sum and the Contract Time may be changed only by Change Order. A Change Order signed by the Contractor indicates his agreement therewith, including the adjustment in the Contract Sum or the Contract Time. All Change Orders must be countersigned by the Administrator in accordance with Paragraph 3.1 as supplemented.

The Owner, without invalidating the Contract, may order changes in the Work within the general scope of the Contract consisting of additions, deletions or other revisions, the Contract Sum and the Contract Time being adjusted accordingly. All such changes in the Work shall be authorized by Change Order, and shall be performed under the applicable conditions of the Contract Documents.

The cost or credit to the Owner resulting from a change in the Work shall be determined in one or more of the following ways:

.1 by mutual acceptance of a lump sum properly itemized and supported by sufficient substantiating data to permit evaluation;

.2 by unit prices stated in the Contract Documents or subsequently agreed upon;

.3 by cost to be determined in a manner agreed upon by the parties and a mutually acceptable fixed or percentage fee, or

.4 by the method provided in Subparagraph 12.1.4.

If none of the methods set forth in Clauses 12.1.3.1, 12.1.3.2 or 12.1.3.3 is agreed upon, the Contractor, provided he receives a written order signed by the Owner, shall promptly proceed with the Work involved. The cost of such Work shall then be determined by the Designer on the basis of the reasonable expenditures and savings of those performing the Work attributable to the change, including, in the case of an increase in the Contract Sum, a reasonable allowance for overhead and profit. In such case, and also under Clauses 12.1.3.3 and 12.1.3.4 above, the Contractor shall keep and present, in such form as the Designer may prescribe, an itemized accounting together with appropriate supporting data for inclusion in a Change Order.

1. Cost of materials entering permanently in the Work, including cost of delivery:

2. Cost of labor at the rates found elsewhere in this document including foremen:

3. Rental value at fair market rental rates of equipment and machinery employed directly on the Work (hand tools and minor equipment excluded):

4. A percentage amount of 25% of item 2 above to cover Workman's Compensation, F.I.C.A., and unemployment contributions.

For Work performed by the Contractor with his own forces there shall be added a percentage fee for the Contractor equal to 15% of the total of Items 1,2,3 hereinabove.

For Work performed by a filed or non-filed Subcontractor there shall be added a percentage fee for the Subcontractor equal to 15% of the total of Items 1,2,3 hereinabove. To this total amount of the Subcontractor's price there may be added an additional percentage fee of 10% for the Contractor.

The percentage fee shall be compensation to cover the cost of supervision, layout, overhead, bonds, profit, and all other expenses which are not included in the cost of the Work as defined above.

Pending final determination of cost to the Owner, payments on account shall be made on the Designer's Certificate for Payment. The amount of credit to be allowed by the Contractor to the Owner for any deletion or change which results in a net decrease in the Contract Sum will be the amount of the actual net cost as confirmed by the Designer. When both additions and credits covering related Work or substitutions are involved in any one change, the allowance for overhead and profit shall be figured on the basis of the net increase, if any, with respect to that change.

If unit prices are stated in the Contract Documents or subsequently agreed upon, and if the quantities originally contemplated are so changed in a proposed Change Order that application of the agreed unit prices to the quantities of Work proposed will cause substantial inequity to the Owner or the Contractor, the applicable unit prices shall be equitably adjusted.

12.2 Concealed Conditions

Pursuant to Section 39N of Chapter 30 of the Laws, the following shall apply to differing concealed conditions:

If, during the progress of the Work, the Contractor or the Awarding Authority discovers that the actual subsurface or latent physical conditions encountered at the site differ substantially or materially from those shown on the plans or indicated in the COntract Documents either the Contractor or the Awarding Authority may request an equitable adjustment in the Contract Price applying to Work affected by the differing site conditions. A request for such an adjustment shall be in writing and shall be delivered by the party making such claim to the other party as soon as possible after such conditions are discovered. Upon receipt of such a claim from the Contractor, or upon its own initiative, the Awarding Authority shall make an investigation of such physical conditions, and, if they differ substantially or materially from those indicated in the Contract Documents or from those ordinarily encountered and generally recognized as inherent in work of the character provided for in the Contract Documents and are of such a nature as to cause an increase or decrease in the cost of the Work, the contracting Authority shall make an equitable adjustment in the Contract Price and the Contract shall be modified in writing accordingly.

12.3 Claims for Additional Cost

If the Contractor wishes to make a claim for an increase in the Contract Sum, he shall give the Designer written notice thereof within twenty days after the occurrence of the event giving rise to such claim. This notice shall be given by the Contractor before proceeding to execute the Work, except in an emergency endangering life or property in which case the Contractor shall proceed in accordance with Paragraph 10.3. No such claim shall be valid unless so made. If the Owner and the Contractor cannot agree on the amount of the adjustment in the Contract Sum, it shall be determined by the Designer. Any change in the Contract Sum resulting from such claim shall be authorized by Change Order.

If the Contractor claims that additional cost is involved because of, but not limited to, (1) any written interpretation pursuant to Subparagraph 2.2.8, (2) any order by the Owner to stop the Work pursuant to Paragraph 3.3 where the Contractor was not at fault, (3) any written order for a minor change in the Work issued pursuant to Paragraph 12.4, or (4) failure of payment by the Owner pursuant to Paragraph 9.7, the Contractor shall make such claims as provided in Subparagraph 12.3.1, except as set forth in Subparagraph 3.3.2 of the Supplementary Conditions.

12.4 Minor Changes in the Work

The Designer will have authority to order minor changes in the Work not involving an adjustment in the Contract Sum or an extension of the Contract Time and not consistent with the intent of the Contract Documents. Such changes shall be effected by written order, and shall be binding on the Owner and the Contractor. The Contractor shall carry out such written orders promptly.

13 **ARTICLE 13**

UNCOVERING AND CORRECTION OF WORK13.1

13.1 Uncovering of Work

If any portion of the Work should be covered contrary to the request of the Designer or to requirements specifically expressed in the Contract Documents, it must, if required in writing by the Designer, be uncovered for his observation and shall be replaced at the Contractor's expense.

If any other portion of the Work has been covered which the Designer has not specifically requested to observe prior to being covered, the Designer may request to see such Work and it shall be uncovered by the Contractor. If such Work be found in accordance with the Contract Documents, the cost of uncovering and replacement shall, by appropriate Change Order, be charged to the Owner. If such Work be found not in accordance with the Contract Documents, the Contractor shall pay such costs unless it be found that this condition was caused by the Owner or a separate contractor as provided in Article 6, in which event the Owner shall be responsible for the payment of such costs.

13.2 Correction of Work

The Contractor shall promptly correct all Work rejected by the Designer as defective or as failing to conform to the Contract Documents whether observed before or after Substantial Completion and whether or not fabricated, installed or completed. The Contractor shall bear all costs of correcting such rejected Work, including compensation for the Designer's additional services made necessary thereby.

If, within one year after the Date of Substantial Completion of the Work or designated portion thereof or within one year after acceptance by the Owner of designated equipment or within such longer period of time as may be prescribed by law or by the terms of any applicable special warranty required by the Contract Documents, any of the Work is found to be defective or not in accordance with the Contract Documents, the Contractor shall correct it promptly after receipt of a written notice from the Owner to do so unless the Owner has previously given the Contractor a written acceptance of such condition. This obligation shall survive termination of the Contract. The Owner shall give such notice promptly after discovery of the condition.

The Contractor shall remove from the site all portions of the Work which are defective or non-conforming and which have not been corrected under Subparagraphs 4.5.1, 13.2.1 and 13.2.2, unless removal is waived by the Owner.

If the Contractor fails to correct defective or nonconforming Work as provided in Subparagraphs 4.5.1, 13.2.1 and 13.2.2, the Owner may correct it in accordance with Paragraph 3.4.

If the Contractor does not proceed with the correction of such defective or non-conforming Work within a reasonable time fixed by written notice from the Designer, the Owner may remove it and may store the materials or equipment at the expense of the Contractor. If the Contractor does not pay the cost of such removal and storage within ten days thereafter, the

Owner may upon ten additional days' written notice sell such Work at auction or at private sale and shall account for the net proceeds thereof, after deducting all the costs that should have been borne by the Contractor, including compensation for the Designer's additional services made necessary thereby. If such proceeds of sale do not cover all costs which the Contractor should have borne, the difference shall be charged to the Contractor and an appropriate Change Order shall be issued. If the payments then or thereafter due the Contractor are not sufficient to cover such amount, the Contractor shall pay the difference to the Owner.

The Contractor shall bear the cost of making good all work of the Owner or separate contractors destroyed or damaged by such correction or removal.

Nothing contained in this Paragraph 13.2 shall be construed to establish a period of limitation with respect to any other obligation which the Contractor might have under the Contract Documents, including Paragraph 4.5 hereof. The establishment of the time period of one year after the Date of Substantial Completion or such longer period of time as may be prescribed by law or by the terms of any warranty required by the Contract Documents relates only to the specific obligation of the Contractor to correct the Work, and has no relationship to the time within which his obligation to comply with the Contract Documents may be sought to be enforced, nor to the time within which proceedings may be commenced to establish the Contractor's liability with respect to his obligations other than specifically to correct the Work.

13.3 Acceptance of Defective or Non-Conforming Work

If the Owner prefers to accept defective or nonconforming Work, he may do so instead of requiring its removal and correction, in which case a Change Order will be issued to reflect a reduction in the Contract Sum where appropriate and equitable. Such adjustment shall be effected whether or not final payment has been made.

13.4 Special Guarantees And Warranties

All guarantees and warranties required in the various Sections of the Specifications which originate with a Subcontractor or manufacturer must be delivered to the Designer before final payment to the Contractor may be made for the amount of that subtrade or for the phase of Work to which the guarantee or warranty relates.

The failure to deliver a required guarantee or warranty shall be held to constitute a failure of the Subcontractor to fully complete his Work in accordance with the Contract Documents.

The Contractor's obligation to correct Work as set forth in Paragraph 13.2 is in addition to, and not in substitution of, such guarantees or warranties as may be required in the various Sections of the Specifications.

14 **ARTICLE 14**

TERMINATION OF THE CONTRACT

14.1 Termination By the Contractor

If the Work is stopped for a period of 30 days under any order of any court or other public Authority having jurisdiction or as a result of an act of government, such as a declaration of a national emergency make materials unavailable, through no act or fault of the Contractor or a Subcontractor, or their Designers or employees, or any other person performing any of the Work under a contract with the Contractor, then the Contractor may, upon seven additional days' written notice to the Owner and Designer, terminate the Contract and recover from the Owner payment for all Work executed and for any proven loss sustained upon any materials, equipment, tools, construction equipment and machinery, including reasonable profit and damages.

14.2 Termination By The Owner

If the Contractor is adjudged a bankrupt, or if he makes a general assignment for the benefit of his creditors, or if a receiver is appointed on account of his insolvency, or if he persistently or repeatedly refuses or fails, except in cases for which extension of time is provided, to supply enough properly skilled workmen or proper materials, or if he fails to make prompt payment to Subcontractors or for materials or labor, or persistently disregards laws, ordinances, rules, regulations or orders of any public authority having jurisdiction, or otherwise is guilty of a substantial violation of a provision of the Contract Documents, then the Owner, upon certification by the Designer that sufficient cause exists to justify such action may, without prejudice to any right or remedy and after giving the Contractor and his surety, if any, seven days' written notice, terminate the employment of the Contractor and take possession of the site and of all materials, equipment, tools, construction equipment and machinery thereon owned by the Contractor and may finish the Work by whatever method he may deem expedient. In such case the Contractor shall not be entitled to receive any further payment until the Work is finished.

If the unpaid balance of the Contract Sum exceeds the costs of finishing the Work, including compensation for the Designer's additional services made necessary thereby, such excess shall be paid to the Contractor. If such costs exceed the unpaid balance, the Contractor shall pay the difference to the Owner. The amount to be paid to the Contractor or to the Owner, as the case may be, shall be certified by the Designer, upon application, in the manner provided in Paragraph 9.4, and this obligation for payment shall survive the termination of the Contract.

SUPPLEMENTARY CONDITIONS

PART 2 - ADDITIONAL CONDITIONS

Articles set forth under Part 2 of this section are additional conditions not covered in the A.I.A. General Conditions.

15. **ARTICLE 15**

LABOR REQUIREMENTS OF THE COMMONWEALTH OF MASSACHUSETTS15.1

15.1 Labor Laws

The Contractor and the Subcontractors shall conform to applicable provisions of M.G.L. Chapter 149, as amended.

No laborer, workman, mechanic, foreman or inspector working in the employment of the Contractor, Subcontractor or other person doing or contracting to do the whole or part of the Work contemplated by this Contract, shall be required or permitted to work any more than eight hours in any one day, or more than 48 hours in any one week, or more than six days in any one week, except in cases of emergency.

Every employee on the Work shall lodge, board, and trade where and with whom he elects, and the Contractor and any Subcontractor shall not directly or indirectly require, as a condition of employment in said Work, that an employee lodge, board, or trade at a particular place or with a particular person.

The Contractor and each Subcontractor shall give preference in employment of mechanics, apprentices, teamsters, chauffeurs and laborers, first to citizens of the Commonwealth who have been residents of the Commonwealth for at least six months at the commencement of their employment and who are veterans as defined in clause 43 of Section 7 of Chapter 4 of the General Laws, and who are qualified to perform the Work to which the employment relates; and secondly, to citizens of the Commonwealth generally, and if they cannot be obtained in sufficient numbers, then to citizens of the United States.

15.2 Executive Orders

The Contractor shall comply with the provisions of M.G.L. Chapter 151B; Executive Order No. 227, Governor's Code of Fair Practices, amending and Revising Executive Orders No. 116 and 117; Executive Order No. 237 pertaining to minority and women business development; Executive Order No. 246 pertaining to the handicapped and all regulations promulgated pursuant thereto. The aforementioned law, Executive Orders, and regulations are incorporated herein by reference and made a part of this Contract.

CONTRACT FOR

Greenfield School Administration Project

THIS AGREEMENT, executed this _____ day of _____ 20____ by and between **(type in Vendor name and address, remember to check Greenfield vendors for overdue taxes)** hereinafter called "Vendor" and **The Town of Greenfield Massachusetts**, party of the second part hereinafter called "Owner".

WITNESSETH, that for the consideration hereinafter mentioned, the Owner and the Vendor shall agree to the terms and conditions contained in this contract, enumerated as follows: The Owner-Vendor Agreement, Bidding Documents, Contract Forms, Specifications contained in architectural plans and specifications, and all addenda issued prior to and all Modifications issued after execution of the Contract.

THE OWNER shall pay the Vendor for the performance of this contract in the sum of **(type in the dollar amount)** dollars in accordance with the terms of this contract.

This contract shall not be altered in any particular without the consent of all parties to this contract. All alterations to this contract must be in writing and authorized as such by the Town of Greenfield and a Majority vote of the Board, Agency, or Committee signing this contract.

The Vendor shall not delegate, assign or transfer any of its duties delineated in the scope of services without prior written consent from the Town of Greenfield.

In the event the Vendor is a corporation a certificate that the person executing this contract is duly authorized to sign, must accompany this contract.

Notwithstanding anything in the Contract documents to the contrary, any and all payments which Awarding Authority is required to make under this Contract shall be subject to appropriation or other availability of funds.

Final payment on this contract shall release and discharge the Owner from any and all claims against the Owner on account of any work performed hereunder, or any alteration hereto.

The Vendor shall indemnify and hold harmless, the Town of Greenfield and all of its officers, agents, and employees against all suits, claims or liabilities of every nature, arising out of, or in consequence of, the acts or omissions of the Vendor, its employees, agents, or sub-contractors in connection with their rendering of services or goods under this AGREEMENT and will, at the Vendor's own cost and expense, defend any and all such suits and actions

By signing this contract the Vendor agrees to subject any dispute to mediation, at the option of Awarding Authority, prior to filing suit in any forum.

This contract shall be deemed to be a Massachusetts contract and its interpretation and construction shall be governed by the laws of Massachusetts.

The provisions of this contract are severable. If any provision of this contract shall be held unconstitutional by any court of competent jurisdiction, the decision of such court shall not affect any other provisions of this contract.

IN WITNESS WHEREOF the Owner caused these presents to be signed in quadruplicate and the said Vendor has caused these presents to be signed in quadruplicate and its official seal to be hereto affixed by its officer or agent thereunto duly authorized (by the attached corporate resolution). This instrument shall take effect as a sealed instrument.

Vendor: _____
Vendor

_____it's
Authorized Signatory

_____ _____
Title Date

Certificate by Corporation to Sign Contract

At a duly authorized meeting of the Board of Directors of the _____
_____
(Name of Corporation)

held on _____.
(Date)

At which all the Directors were present or waived notice, it was voted that, the Authorized Signatory of this company, be and he hereby is authorized to execute contracts and bonds in the name and behalf of said company, and affix its Corporate Seal thereto, and such execution of any contract or obligation in this company's name on its behalf by such officer under seal of the company, shall be valid and binding upon this company,

A TRUE COPY,

ATTEST: _____
(Clerk)

Place of Business _____

_____

Date of this Contract _____

Town of Greenfield Massachusetts

BID BOND

Bond No._____

KNOW BY ALL THESE PRESENTS, that we _____ as Principal, hereinafter called the Principal, and (Bonding Company), a corporation duly organized under the laws of the Commonwealth of Massachusetts as Surety, hereinafter called the Surety, are held and firmly bound unto The Town of Greenfield, Massachusetts for the sum of _____ dollars ($_____), for the payment of which sum well and truly to be made, the said Principal and the said Surety bind ourselves, our heirs, executors, administrators, successors, and assigns, jointly and severally, firmly by these presents.

WHEREAS, the Principal has submitted a bid for Greenfield School Administration Office Project in Greenfield, Massachusetts.

NOW, THEREFORE, if The Town of Greenfield shall accept the bid of the Principal and the Principal shall enter into a contract with the Town of Greenfield in accordance with the terms of such bid, and give such bonds or bonds as may be specified in the bidding or Contract documents with good and sufficient surety for the faithful performance of such Contract and for the prompt payment of labor and material furnished in the prosecution thereof, or in the event of the failure of the Principal to enter such Contract and give such bond or bonds, if the Principal shall pay to the Town of Greenfield the difference not to exceed the penalty hereof between the amount specified in said bid and such larger amount for which the Town of Greenfield may in good faith contract with another party to perform work covered by said bid or an appropriate required amount as specified an the Invitation For Bids then this obligation shall be null and void, otherwise to remain in full force and effect.

Signed and sealed this _____ day of _____ 2014.

_____
(Principal) (Seal)

_____
(Witness)

_____
(Title)

(BONDING COMPANY)

_____
(Witness)

By_____
(Attorney-in-Fact)

FORM OF CONTRACTOR'S EQUAL EMPLOYMENT CERTIFICATION

This form must be completed and submitted by the Contractor prior to the signing of the Owner-Contractor Agreement.

This certifies that:

_____
Contractor

_____
Street Address

_____
City/State/Zip Code

1. Intends to use the following listed construction trades in the work under this contract:

_____

_____

_____

_____

2. Will comply with the minority manpower ratio and specific affirmative action steps contained herein; and

3. Will obtain similar certifications from each of its subcontractors and submit to the Authority prior to the award of any subcontract under this contract the subcontractor's certification.

_____
(Signature of authorized representative of contractor)

_____ _____
Date **Name and Title**

FORM OF SUBCONTRACTOR'S EQUAL EMPLOYMENT CERTIFICATION

This form must be completed and submitted by all Subcontractors prior to the validation of the Owner-Contractor Agreement.

This certifies that:

_____
Contractor

_____
Street Address

_____
City/State/Zip Code

1. Intends to use the following listed construction trades in the work under this contract:

_____
_____
_____
_____

2. Will comply with the minority manpower ratio and specific affirmative action steps contained herein; and

3. Will obtain similar certifications from each of its subcontractors and submit to the Authority prior to the award of any subcontract under this contract the subcontractor's certification.

_____
(Signature of authorized representative of contractor)

_____ _____
Date **Name and Title**

Bond No _____

PAYMENT BOND

KNOW ALL MEN BY THESE PRESENTS:

That we, _____ as **Principal**,

and _____ as **Surety**, are held and firmly bound unto

the _____ **The Town of Greenfield, Massachusetts**. as **Obligee**, in the sum of

of _____ **dollars** **$** _____

to be paid to the Obligee, for which payments, well and truly to be made, we bind ourselves, our respective heirs, executors, administrators, successors and assigns, jointly and severally, firmly by these presents.

WHEREAS, the said **Principal** has made a contract with the **Obligee,** bearing the date of _____ 2016

for the construction of Greenfield School Administration Office Project in Greenfield Massachusetts

Project Title

NOW the conditions of this obligation are such that if the **Principal** and all subcontractors under said contract shall pay for all labor performed or furnished and for all materials used or employed in said contract and in any and all duly authorized modifications, alterations, extensions of time, changes or additions to said contract that may hereafter be made, notice to the **Surety** of such modifications, alterations, extensions of time, changes or additions being hereby waived, the foregoing to include any other purposes or items set out in, and to be subject to, provisions of M.G.L. c.30 §39A, and M.G.L. c.149 §29, as amended, then this obligation shall become null and void; otherwise it shall remain in full force and virtue.

IN WITNESS WHEREOF, the **Principal** and **Surety** have hereunto set their hands and seals this:

_____ Day of _____ 2016

PRINCIPAL	**SURETY**
_____	_____
By: _____	**By:** _____
Seal	**Attorney-in Fact**
Attest: _____	**Attest** _____

The rate for this bond is _____ % for the first **$** _____ and _____ % for the next **$** _____

The total premium for this bond is **$** _____

Bond No _____

PERFORMANCE BOND

KNOW ALL MEN BY THESE PRESENTS:

That we, _____ as **Principal**,

and _____ as **Surety**, are held and firmly bound unto

the _____ **The Town of Greenfield**, Massachusetts as **Obligee**, in the ssumsum of

sum of _____ **dollars** **$** _____

to be paid to the Obligee, for which payments, well and truly to be made, we bind ourselves, our respective heirs, executors, administrators, successors and assigns, jointly and severally, firmly by these presents.

WHEREAS, the said **Principal** has made a contract with the **Obligee,** bearing the date of _____ 2016

for the construction of Greenfield School Administration Office Project in Greenfield Massachusetts

Project Title

NOW, the condition of this obligation is such that if the **Principal** and all Subcontractors under said contract shall well and truly keep and perform all the undertakings, covenants, agreement, terms and conditions of said contract on its part to be kept and performed during the original term of said contract and any extensions thereof that may be granted by the Obligee, with or without notice to the **Surety,** and during the life and any guarantee required under the contract, and shall also well and truly keep and perform all the undertakings, covenants, agreements, terms and conditions of any and all duly authorized modifications, alterations changes or additions to said contract that may hereafter be made, notice to the **Surety** of such modifications, alterations, changes or additions being hereby waived, then this obligation shall become null and void; otherwise, it shall remain in full force and virtue.

IN THE EVENT, that the contract is abandoned by the **Principal**, or in the event that the Obligee, under the provisions of Article 19 of the General Conditions of said contract terminates the employment of the **Principal** or the authority of the **Principal** to continue the work, said **Surety** hereby further agrees that said **Surety** shall, if requested in writing by the Obligee, take such action as is necessary to complete said contract.

IN WITNESS WHEREOF, the **Principal** and **Surety** have hereunto set their hands and seals this:

_____ Day of _____ 2016

PRINCIPAL	**SURETY**
_____	_____
By: _____	**By:** _____
Seal	**Attorney-in Fact**
Attest: _____	**Attest** _____

The rate for this bond is _____ % for the first **$** _____ and _____ % for the next **$** _____

The total premium for this bond is **$** _____

SECTION 01010

SUMMARY OF WORK

1. GENERAL SCOPE OF WORK

A. The Work under the Contract consists of:

(1.) Sitework:
- a. Excavation for new footings, foundations & slabs
- b. Restoration of finished grade and lawns in work area

(2.) Concrete:
- a. Footings, foundations and slab on grade

(3.) Masonry:
- a. Repairs to existing CMU walls
- b. Cutting openings for new doors & windows
- c. Installation of new steel angle lintels in new door openings.

(4.) Metals:
- a. Structural steel- lintels and columns
- b. Miscellaneous brackets, braces, and grating
- c. Railings and guards

(5.) Interior Carpentry :
- a. Installing new interior doors & hardware
- b. Removing and salvaging existing cabinetry
- c. Framing for new and modified interior partitions
- d. Installing misc. trim, millwork and cabinetry.

(6.) Moisture Control:
- a. Sealants for new entrance door frames
- b. Sealants at intersection of new partitions and existing construction

(7.) Plaster and gypsum board
- a. Interior gypsum walls and ceilings
- b. Acoustical insulation and sealants.
- c. Patching damaged areas in existing walls and ceilings

(8.) Acoustical Ceilings
- a. Removing and storing existing ceiling tile for reinstallation
- b. Reinstalling ceiling tile when other trades work is completed.
- c. Replacing damaged ceiling tiles
- d. Installing areas of new ceiling tile and suspension grid

(9.) Resilient Flooring
- a. Installation of new resilient base
- b. Cutting and Patching areas of existing resilient base

c. Replacement of damaged VCT

(10.) Interior Painting: (Filed Sub Bid Required)

a. Surface preparation on all surfaces to be refinished
b. Painting of new and existing gypsum board walls & ceilings
c. Painting of new and existing cmu walls
d. Finishing of new interior wood doors and painting of HM frames.

(11.) Plumbing

a. Removing and capping plumbing and laboratory fixtures to be removed in the work area.

(12.) HVAC (Filed Sub Bid Required)

a. Modifications and additions to existing heating and ventilation systems
b. Addition of air conditioning systems in Administration Office areas

(13.) Electrical: (Filed Sub Bid Required)

a. Wiring of the work area for power and lighting
b. Relocation of existing lighting fixtures and electrical devices
c. Installation or relocation of drops for telephone and data
d. Alterations of or additions to existing fire alarm system including smoke/heat detectors and pull stations
e. Installation of emergency egress lighting and exit signs
f. Installation of new interior & exterior light fixtures.

(14.) Fire Protection: (Filed Sub Bid Required)

a. Additions and modifications to existing fire sprinkler system

(13.) All Work either shown on the Drawings or included in the specifications unless specifically indicated as not to be done.

B. In addition, the Work under the Contract includes:

(1.) Work outside the Project Site as called for in the Contract Documents and as required for the performance of the Work.

(2.) The restoration of any items damaged or destroyed by encroaching upon areas outside the Project Site.

(3.) Providing and restoring, where appropriate, all temporary facilities.

(4.) Protection of building, occupants and adjacent property from dust, fumes and other hazards resulting from construction activities.

2. WORK BY THE OWNER

A. Items identified in the construction documents or listed here.

(1.) Construction of new parking spaces including paving and striping.

3. ITEMS RETAINED BY THE OWNER

A. Items identified in the construction documents

(1.) Store and protect from damage all items indicated to be retained on site.

B. Materials removed during demolition:

(1.) Carefully remove materials during demolition keeping intact the largest possible pieces for review by the owner before disposing. Items which may have historical significance must be delivered to the owner for storage.

3. TIME OF COMPLETION

A. In accordance with Article 3 of the General Conditions, the Work shall start as stated in the Notice to Proceed and shall be complete not later than September 2, 2016.

END OF SECTION

SECTION 01040

EXISTING CONDITIONS

1. GENERAL PROVISIONS

A. The Conditions of the Contract and other Sections of Division l, General Requirements apply to this section.

2. EXISTING CONDITIONS

A. Before submitting a bid, the Contractor shall make a thorough examination of the conditions at the site, checking the requirements of the Plans and Specifications with the existing conditions.

B. No claim for extra compensation or extension of time will be allowed on account of the Contractor's failure to estimate properly the quantities, locations, and measurements of all items required to complete the work which could be discerned from visiting the site.

C. The Contractor shall report any discrepancies between the drawings and specifications and the actual building conditions to the Architect and request an interpretation.

The general contractor and subcontractors shall follow the Massachusetts Division of Occupational Safety Deleading and Lead Safe Renovation Regulations 454 CMR 22.00. *www.mass.gov.dos*

These regulations (as of July 9, 2010) now encompass EPA's Lead Renovation, Repair and Painting Rule (RRP Rule). The regulation describes the requirements for training and certification to perform work that disturbs leaded surfaces.

454 CMR 22.11 specifically discusses and describes in detail the lead safe work practices and other requirements for renovation work.

A hazardous materials assessment is available to contractors and personnel working on the jobsite.

END OF SECTION

SECTION 01050

CONDUCT OF THE WORK

1. GENERAL PROVISIONS

A. The Conditions of the Contract and other Sections of Division l, General Requirements apply to this section.

2. PROJECT MANAGEMENT

A. The Contractor's attention is directed to Article VI of the General Conditions.

B. The building will not be occupied during construction.

C. The work must be completed in a continuous uninterrupted operation. The Contractor must use sufficient personnel and adequate equipment to complete all the necessary work requirements within a minimum period of time. Final Completion: The project shall be "Substantially Complete" within six months of the issuance of the Notice to Proceed.

D. Unless specifically authorized by the Owner, in writing, the work must be conducted between the hours of 7:00 a.m. and 4:30 p.m. on Monday through Friday.

E. The Contractor is responsible for the security of partially completed work until the project is accepted by the Owner.

3. SHUTDOWN OF SERVICES

A. The Contractor's attention is especially called to the fact that the continuous operation of services for this building is mandatory. If the development is to be left without heat, hot water, domestic water, electricity, gas, sanitary facilities or any other services for more than an eight hour period, the Contractor shall submit a letter and obtain written approval from the Owner before proceeding.

4. COORDINATION

A. The Contractor shall submit for approval to the Owner a detailed operational plan showing the sequence of operations prior to commencement of any work at the site. Any changes to this operational plan must be approved by the Owner.

B. The Contractor must retain on the Work during its progress a competent full time representative, satisfactory to the Owner. This representative shall not be changed, except with the consent of the Owner. The representative shall be in full charge of the work and all instructions given to this person by the Architect shall be binding.

5. OWNER'S COOPERATION

A. The Owner shall assist the Contractor to perform the Work in accordance with the approved operational plan by removing obstructions that may be in the Contractor's way, upon proper notice from the Contractor.

6. RETAINED ITEMS

A. The following items which are to be removed and are in good condition shall be retained by the Owner (at the discretion of the Owner) and shall be stored at a location directed by the Owner.

1. Doors and Hardware
2. Cabinetry
3. Plumbing fixtures – Faucets, sinks and gas cocks.

END OF SECTION

THE COMMONWEALTH OF MASSACHUSETTS
EXECUTIVE OFFICE OF LABOR AND WORKFORCE DEVELOPMENT
DEPARTMENT OF LABOR STANDARDS

Prevailing Wage Rates

As determined by the Director under the provisions of the Massachusetts General Laws, Chapter 149, Sections 26 to 27H

CHARLES D. BAKER
Governor

KARYN E. POLITO
Lt. Governor

RONALD L. WALKER, II
Secretary

WILLIAM D MCKINNEY
Director

Awarding Authority: Town of Greenfield

Contract Number: 1548 **City/Town:** GREENFIELD

Description of Work: Renovation of the exiting School Administration building. Renovations will consist of painting, fire protection, HVAC, electrical and other general construction requirements.

Job Location: 175 Federal Street

Information about Prevailing Wage Schedules for Awarding Authorities and Contractors

- This wage schedule applies only to the specific project referenced at the top of this page and uniquely identified by the "Wage Request Number" on all pages of this schedule.
- An Awarding Authority must request an updated wage schedule from the Department of Labor Standards ("DLS") if it has not opened bids or selected a contractor within 90 days of the date of issuance of the wage schedule. For CM AT RISK projects (bid pursuant to G.L. c.149A), the earlier of: (a) the execution date of the GMP Amendment, or (b) the bid for the first construction scope of work must be within 90-days of the wage schedule issuance date.
- The wage schedule shall be incorporated in any advertisement or call for bids for the project as required by M.G.L. c. 149, § 27. The wage schedule shall be made a part of the contract awarded for the project. The wage schedule must be posted in a conspicuous place at the work site for the life of the project in accordance with M.G.L. c. 149 § 27. The wages listed on the wage schedule must be paid to employees performing construction work on the project whether they are employed by the prime contractor, a filed sub-bidder, or any sub-contractor.
- All apprentices working on the project are required to be registered with the Massachusetts Department of Labor Standards, Division of Apprentice Standards (DLS/DAS). Apprentice must keep his/her apprentice identification card on his/her person during all work hours on the project. An apprentice registered with DAS may be paid the lower apprentice wage rate at the applicable step as provided on the prevailing wage schedule. **Any apprentice not registered with DLS/DAS regardless of whether or not they are registered with any other federal, state, local, or private agency must be paid the journeyworker's rate for the trade.**
- The wage rates will remain in effect for the duration of the project, except in the case of multi-year public construction projects. For construction projects lasting longer than one year, awarding authorities must request an updated wage schedule. Awarding authorities are required to request these updates no later than two weeks before the anniversary of the date the contract was executed by the awarding authority and the general contractor. For multi-year CM AT RISK projects, awarding authority must request an annual update no later than two weeks before the anniversary date, determined as the earlier of: (a) the execution date of the GMP Amendment, or (b) the execution date of the first amendment to permit procurement of construction services. Contractors are required to obtain the wage schedules from awarding authorities, and to pay no less than these rates to covered workers. The annual update requirement is not applicable to 27F "rental of equipment" contracts.
- Every contractor or subcontractor which performs construction work on the project is required to submit weekly payroll reports and a Statement of Compliance directly to the awarding authority by mail or email and keep them on file for three years. Each weekly payroll report must contain: the employee's name, address, occupational classification, hours worked, and wages paid. Do not submit weekly payroll reports to DLS. A sample of a payroll reporting form may be obtained at http://www.mass.gov/dols/pw.
- Contractors with questions about the wage rates or classifications included on the wage schedule have an affirmative obligation to inquire with DLS at (617) 626-6953.
- Employees not receiving the prevailing wage rate set forth on the wage schedule may report the violation to the Fair Labor Division of the office of the Attorney General at (617) 727-3465.
- Failure of a contractor or subcontractor to pay the prevailing wage rates listed on the wage schedule to all employees who perform construction work on the project is a violation of the law and subjects the contractor or subcontractor to civil and

Classification	Effective Date	Base Wage	Health	Pension	Supplemental Unemployment	Total Rate
Construction						
(2 AXLE) DRIVER - EQUIPMENT *TEAMSTERS JOINT COUNCIL NO. 10 ZONE B*	12/01/2015	$31.65	$10.41	$10.08	$0.00	$52.14
	06/01/2016	$32.15	$10.41	$10.08	$0.00	$52.64
	08/01/2016	$32.15	$10.91	$10.08	$0.00	$53.14
	12/01/2016	$32.15	$10.91	$10.89	$0.00	$53.95
(3 AXLE) DRIVER - EQUIPMENT *TEAMSTERS JOINT COUNCIL NO. 10 ZONE B*	12/01/2015	$31.72	$10.41	$10.08	$0.00	$52.21
	06/01/2016	$32.22	$10.41	$10.08	$0.00	$52.71
	08/01/2016	$32.22	$10.91	$10.08	$0.00	$53.21
	12/01/2016	$32.22	$10.91	$10.89	$0.00	$54.02
(4 & 5 AXLE) DRIVER - EQUIPMENT *TEAMSTERS JOINT COUNCIL NO. 10 ZONE B*	12/01/2015	$31.84	$10.41	$10.08	$0.00	$52.33
	06/01/2016	$32.34	$10.41	$10.08	$0.00	$52.83
	08/01/2016	$32.34	$10.91	$10.08	$0.00	$53.33
	12/01/2016	$32.34	$10.91	$10.89	$0.00	$54.14
ADS/SUBMERSIBLE PILOT *PILE DRIVER LOCAL 56 (ZONE 3)*	08/01/2015	$90.51	$9.80	$18.17	$0.00	$118.48
For apprentice rates see "Apprentice- PILE DRIVER"						
AIR TRACK OPERATOR *LABORERS - ZONE 3 (BUILDING & SITE)*	12/07/2015	$29.75	$7.45	$11.86	$0.00	$49.06
	06/06/2016	$30.44	$7.45	$11.86	$0.00	$49.75
	12/05/2016	$31.12	$7.45	$11.86	$0.00	$50.43
For apprentice rates see "Apprentice- LABORER"						
AIR TRACK OPERATOR (HEAVY & HIGHWAY) *LABORERS - ZONE 3 (HEAVY & HIGHWAY)*	12/01/2015	$29.49	$7.45	$10.28	$0.00	$47.22
	06/01/2016	$29.99	$7.45	$10.28	$0.00	$47.72
	12/01/2016	$30.74	$7.45	$10.28	$0.00	$48.47
For apprentice rates see "Apprentice- LABORER (Heavy and Highway)						
ASBESTOS WORKER (PIPES & TANKS) *HEAT & FROST INSULATORS LOCAL 6 (SPRINGFIELD)*	12/01/2015	$30.94	$10.40	$5.45	$0.00	$46.79
ASPHALT RAKER *LABORERS - ZONE 3 (BUILDING & SITE)*	12/07/2015	$29.25	$7.45	$11.86	$0.00	$48.56
	06/06/2016	$29.94	$7.45	$11.86	$0.00	$49.25
	12/05/2016	$30.62	$7.45	$11.86	$0.00	$49.93
For apprentice rates see "Apprentice- LABORER"						
ASPHALT RAKER (HEAVY & HIGHWAY) *LABORERS - ZONE 3 (HEAVY & HIGHWAY)*	12/01/2015	$28.99	$7.45	$10.28	$0.00	$46.72
	06/01/2016	$29.49	$7.45	$10.28	$0.00	$47.22
	12/01/2016	$30.24	$7.45	$10.28	$0.00	$47.97
For apprentice rates see "Apprentice- LABORER (Heavy and Highway)						
AUTOMATIC GRADER-EXCAVATOR (RECLAIMER) *OPERATING ENGINEERS LOCAL 98*	12/01/2015	$32.97	$10.18	$11.74	$0.00	$54.89
For apprentice rates see "Apprentice- OPERATING ENGINEERS"						
BACKHOE/FRONT-END LOADER OPERATOR *OPERATING ENGINEERS LOCAL 98*	12/01/2015	$32.97	$10.18	$11.74	$0.00	$54.89
For apprentice rates see "Apprentice- OPERATING ENGINEERS"						
BARCO-TYPE JUMPING TAMPER *LABORERS - ZONE 3 (BUILDING & SITE)*	12/07/2015	$29.25	$7.45	$11.86	$0.00	$48.56
	06/06/2016	$29.94	$7.45	$11.86	$0.00	$49.25
	12/05/2016	$30.62	$7.45	$11.86	$0.00	$49.93
For apprentice rates see "Apprentice- LABORER"						
BATCH/CEMENT PLANT - ON SITE *OPERATING ENGINEERS LOCAL 98*	12/01/2015	$32.44	$10.18	$11.74	$0.00	$54.36
For apprentice rates see "Apprentice- OPERATING ENGINEERS"						

Classification	Effective Date	Base Wage	Health	Pension	Supplemental Unemployment	Total Rate
BLOCK PAVER, RAMMER / CURB SETTER *LABORERS - ZONE 3 (BUILDING & SITE)*	12/07/2015	$29.75	$7.45	$11.86	$0.00	$49.06
	06/06/2016	$30.44	$7.45	$11.86	$0.00	$49.75
	12/05/2016	$31.12	$7.45	$11.86	$0.00	$50.43
For apprentice rates see "Apprentice- LABORER"						
BLOCK PAVER, RAMMER / CURB SETTER (HEAVY & HIGHWAY) *LABORERS - ZONE 3 (HEAVY & HIGHWAY)*	12/01/2015	$29.49	$7.45	$10.28	$0.00	$47.22
	06/01/2016	$29.99	$7.45	$10.28	$0.00	$47.72
	12/01/2016	$30.74	$7.45	$10.28	$0.00	$48.47
For apprentice rates see "Apprentice- LABORER (Heavy and Highway)						
BOILER MAKER *BOILERMAKERS LOCAL 29*	01/01/2016	$41.62	$6.97	$16.21	$0.00	$64.80
	01/01/2017	$42.92	$6.97	$16.21	$0.00	$66.10

Apprentice - *BOILERMAKER - Local 29*

Effective Date - 01/01/2016

Step	percent	Apprentice Base Wage	Health	Pension	Supplemental Unemployment	Total Rate
1	65	$27.05	$6.97	$10.54	$0.00	$44.56
2	65	$27.05	$6.97	$10.54	$0.00	$44.56
3	70	$29.13	$6.97	$11.35	$0.00	$47.45
4	75	$31.22	$6.97	$12.16	$0.00	$50.35
5	80	$33.30	$6.97	$12.97	$0.00	$53.24
6	85	$35.38	$6.97	$13.78	$0.00	$56.13
7	90	$37.46	$6.97	$14.59	$0.00	$59.02
8	95	$39.54	$6.97	$15.40	$0.00	$61.91

Effective Date - 01/01/2017

Step	percent	Apprentice Base Wage	Health	Pension	Supplemental Unemployment	Total Rate
1	65	$27.90	$6.97	$10.54	$0.00	$45.41
2	65	$27.90	$6.97	$10.54	$0.00	$45.41
3	70	$30.04	$6.97	$11.35	$0.00	$48.36
4	75	$32.19	$6.97	$12.16	$0.00	$51.32
5	80	$34.34	$6.97	$12.97	$0.00	$54.28
6	85	$36.48	$6.97	$13.78	$0.00	$57.23
7	90	$38.63	$6.97	$14.59	$0.00	$60.19
8	95	$40.77	$6.97	$15.40	$0.00	$63.14

Notes:

Apprentice to Journeyworker Ratio:1:5

BRICK/STONE/ARTIFICIAL MASONRY (INCL. MASONRY WATERPROOFING) *BRICKLAYERS LOCAL 3 (SPRINGFIELD/PITTSFIELD)*	02/29/2016	$38.36	$10.18	$17.30	$0.00	$65.84
	09/05/2016	$39.26	$10.18	$17.38	$0.00	$66.82
	02/27/2017	$39.83	$10.18	$17.38	$0.00	$67.39

Classification	Effective Date	Base Wage	Health	Pension	Supplemental Unemployment	Total Rate

Apprentice - *BRICK/PLASTER/CEMENT MASON - Local 3 Springfield/Pittsfield*

Effective Date - 02/29/2016

Step	percent	Apprentice Base Wage	Health	Pension	Supplemental Unemployment	Total Rate
1	50	$19.18	$10.18	$17.30	$0.00	$46.66
2	60	$23.02	$10.18	$17.30	$0.00	$50.50
3	70	$26.85	$10.18	$17.30	$0.00	$54.33
4	80	$30.69	$10.18	$17.30	$0.00	$58.17
5	90	$34.52	$10.18	$17.30	$0.00	$62.00

Effective Date - 09/05/2016

Step	percent	Apprentice Base Wage	Health	Pension	Supplemental Unemployment	Total Rate
1	50	$19.63	$10.18	$17.38	$0.00	$47.19
2	60	$23.56	$10.18	$17.38	$0.00	$51.12
3	70	$27.48	$10.18	$17.38	$0.00	$55.04
4	80	$31.41	$10.18	$17.38	$0.00	$58.97
5	90	$35.33	$10.18	$17.38	$0.00	$62.89

Notes:

Apprentice to Journeyworker Ratio:1:5

BULLDOZER/POWER SHOVEL/TREE SHREDDER /CLAM SHELL *OPERATING ENGINEERS LOCAL 98*	12/01/2015	$32.97	$10.18	$11.74	$0.00	$54.89
For apprentice rates see "Apprentice- OPERATING ENGINEERS"						
CAISSON & UNDERPINNING BOTTOM MAN *LABORERS - FOUNDATION AND MARINE*	12/01/2015	$36.45	$7.45	$13.75	$0.00	$57.65
	06/01/2016	$37.20	$7.45	$13.75	$0.00	$58.40
	12/01/2016	$38.20	$7.45	$13.75	$0.00	$59.40
For apprentice rates see "Apprentice- LABORER"						
CAISSON & UNDERPINNING LABORER *LABORERS - FOUNDATION AND MARINE*	12/01/2015	$35.30	$7.45	$13.75	$0.00	$56.50
	06/01/2016	$36.05	$7.45	$13.75	$0.00	$57.25
	12/01/2016	$37.05	$7.45	$13.75	$0.00	$58.25
For apprentice rates see "Apprentice- LABORER"						
CAISSON & UNDERPINNING TOP MAN *LABORERS - FOUNDATION AND MARINE*	12/01/2015	$35.30	$7.45	$13.75	$0.00	$56.50
	06/01/2016	$36.05	$7.45	$13.75	$0.00	$57.25
	12/01/2016	$37.05	$7.45	$13.75	$0.00	$58.25
For apprentice rates see "Apprentice- LABORER"						
CARBIDE CORE DRILL OPERATOR *LABORERS - ZONE 3 (BUILDING & SITE)*	12/07/2015	$29.25	$7.45	$11.86	$0.00	$48.56
	06/06/2016	$29.94	$7.45	$11.86	$0.00	$49.25
	12/05/2016	$30.62	$7.45	$11.86	$0.00	$49.93
For apprentice rates see "Apprentice- LABORER"						
CARPENTER *CARPENTERS LOCAL 108 - HAMPDEN HAMPSHIRE*	02/29/2016	$32.60	$8.55	$14.72	$0.00	$55.87

Classification	Effective Date	Base Wage	Health	Pension	Supplemental Unemployment	Total Rate

Apprentice - *CARPENTER - Local 108 Hampden Hampshire*

Effective Date - 02/29/2016

Step	percent	Apprentice Base Wage	Health	Pension	Supplemental Unemployment	Total Rate
1	50	$16.30	$8.55	$1.20	$0.00	$26.05
2	60	$19.56	$8.55	$1.20	$0.00	$29.31
3	70	$22.82	$8.55	$11.12	$0.00	$42.49
4	75	$24.45	$8.55	$11.12	$0.00	$44.12
5	80	$26.08	$8.55	$12.32	$0.00	$46.95
6	80	$26.08	$8.55	$12.32	$0.00	$46.95
7	90	$29.34	$8.55	$13.52	$0.00	$51.41
8	90	$29.34	$8.55	$13.52	$0.00	$51.41

Notes: Pre-6/09 Step1$25.60/2$27.23/3$42.83/4$46.09/5$49.35/6$50.98
** 1: 1-5/2: 6-8/3:9-11/Steps: 6 mos (600 hrs)/rates by step
7$52.61/8$54.24

Apprentice to Journeyworker Ratio:**

CEMENT MASONRY/PLASTERING *BRICKLAYERS LOCAL 3 (SPRINGFIELD/PITTSFIELD)*	01/01/2016	$39.62	$10.85	$13.94	$1.30	$65.71

Apprentice - *CEMENT MASONRY/PLASTERING - Springfield/Pittsfield*

Effective Date - 01/01/2016

Step	percent	Apprentice Base Wage	Health	Pension	Supplemental Unemployment	Total Rate
1	0	$0.00	$0.00	$0.00	$0.00	$0.00

Notes: Apprentice wages shall be no less than the following Steps;
1$46.02/2$53.40/3$56.69/4$59.98/5$63.28/6$66.57/7$72.15
Steps 3,4 are 500 hrs. All other steps are 1,000 hrs.

Apprentice to Journeyworker Ratio:1:3

CHAIN SAW OPERATOR *LABORERS - ZONE 3 (BUILDING & SITE)*	12/07/2015	$29.25	$7.45	$11.86	$0.00	$48.56
	06/06/2016	$29.94	$7.45	$11.86	$0.00	$49.25
	12/05/2016	$30.62	$7.45	$11.86	$0.00	$49.93
For apprentice rates see "Apprentice- LABORER"						
COMPRESSOR OPERATOR *OPERATING ENGINEERS LOCAL 98*	12/01/2015	$32.44	$10.18	$11.74	$0.00	$54.36
For apprentice rates see "Apprentice- OPERATING ENGINEERS"						
CRANE OPERATOR *OPERATING ENGINEERS LOCAL 98*	12/01/2015	$36.47	$10.18	$11.74	$0.00	$58.39
For apprentice rates see "Apprentice- OPERATING ENGINEERS"						
DELEADER (BRIDGE) *PAINTERS LOCAL 35 - ZONE 3*	01/01/2016	$49.51	$7.85	$16.10	$0.00	$73.46
	07/01/2016	$50.46	$7.85	$16.10	$0.00	$74.41
	01/01/2017	$51.41	$7.85	$16.10	$0.00	$75.36

Classification	Effective Date	Base Wage	Health	Pension	Supplemental Unemployment	Total Rate

Apprentice - *PAINTER Local 35 - BRIDGES/TANKS*

Effective Date - 01/01/2016

Step	percent	Apprentice Base Wage	Health	Pension	Supplemental Unemployment	Total Rate
1	50	$24.76	$7.85	$0.00	$0.00	$32.61
2	55	$27.23	$7.85	$3.66	$0.00	$38.74
3	60	$29.71	$7.85	$3.99	$0.00	$41.55
4	65	$32.18	$7.85	$4.32	$0.00	$44.35
5	70	$34.66	$7.85	$14.11	$0.00	$56.62
6	75	$37.13	$7.85	$14.44	$0.00	$59.42
7	80	$39.61	$7.85	$14.77	$0.00	$62.23
8	90	$44.56	$7.85	$15.44	$0.00	$67.85

Effective Date - 07/01/2016

Step	percent	Apprentice Base Wage	Health	Pension	Supplemental Unemployment	Total Rate
1	50	$25.23	$7.85	$0.00	$0.00	$33.08
2	55	$27.75	$7.85	$3.66	$0.00	$39.26
3	60	$30.28	$7.85	$3.99	$0.00	$42.12
4	65	$32.80	$7.85	$4.32	$0.00	$44.97
5	70	$35.32	$7.85	$14.11	$0.00	$57.28
6	75	$37.85	$7.85	$14.44	$0.00	$60.14
7	80	$40.37	$7.85	$14.77	$0.00	$62.99
8	90	$45.41	$7.85	$15.44	$0.00	$68.70

Notes:

Steps are 750 hrs.

Apprentice to Journeyworker Ratio:1:1

DEMO: ADZEMAN *LABORERS - ZONE 3 (BUILDING & SITE)*	12/01/2015	$35.50	$7.45	$13.55	$0.00	$56.50
For apprentice rates see "Apprentice- LABORER"						
DEMO: BACKHOE/LOADER/HAMMER OPERATOR *LABORERS - ZONE 3 (BUILDING & SITE)*	12/01/2015	$36.50	$7.45	$13.55	$0.00	$57.50
For apprentice rates see "Apprentice- LABORER"						
DEMO: BURNERS *LABORERS - ZONE 3 (BUILDING & SITE)*	12/01/2015	$36.25	$7.45	$13.55	$0.00	$57.25
For apprentice rates see "Apprentice- LABORER"						
DEMO: CONCRETE CUTTER/SAWYER *LABORERS - ZONE 3 (BUILDING & SITE)*	12/01/2015	$36.50	$7.45	$13.55	$0.00	$57.50
For apprentice rates see "Apprentice- LABORER"						
DEMO: JACKHAMMER OPERATOR *LABORERS - ZONE 3 (BUILDING & SITE)*	12/01/2015	$36.25	$7.45	$13.55	$0.00	$57.25
For apprentice rates see "Apprentice- LABORER"						
DEMO: WRECKING LABORER *LABORERS - ZONE 3 (BUILDING & SITE)*	12/01/2015	$35.50	$7.45	$13.55	$0.00	$56.50
For apprentice rates see "Apprentice- LABORER"						
DIVER *PILE DRIVER LOCAL 56 (ZONE 3)*	08/01/2015	$60.34	$9.80	$18.17	$0.00	$88.31

Classification	Effective Date	Base Wage	Health	Pension	Supplemental Unemployment	Total Rate
For apprentice rates see "Apprentice- PILE DRIVER"						
DIVER TENDER *PILE DRIVER LOCAL 56 (ZONE 3)*	08/01/2015	$43.10	$9.80	$18.17	$0.00	$71.07
For apprentice rates see "Apprentice- PILE DRIVER"						
DIVER TENDER (EFFLUENT) *PILE DRIVER LOCAL 56 (ZONE 3)*	08/01/2015	$64.65	$9.80	$18.17	$0.00	$92.62
For apprentice rates see "Apprentice- PILE DRIVER"						
DIVER/SLURRY (EFFLUENT) *PILE DRIVER LOCAL 56 (ZONE 3)*	08/01/2015	$90.51	$9.80	$18.17	$0.00	$118.48
For apprentice rates see "Apprentice- PILE DRIVER"						
ELECTRICIAN (Including Core Drilling) *ELECTRICIANS LOCAL 7*	01/03/2016	$38.41	$9.35	$10.10	$0.00	$57.86
	07/03/2016	$39.31	$9.35	$10.10	$0.00	$58.76
	01/01/2017	$40.21	$9.35	$10.10	$0.00	$59.66

Apprentice - *ELECTRICIAN - Local 7*

Effective Date - 01/03/2016

Step	percent	Apprentice Base Wage	Health	Pension	Supplemental Unemployment	Total Rate
1	40	$15.36	$5.00	$0.46	$0.00	$20.82
2	45	$17.28	$5.00	$0.52	$0.00	$22.80
3	50	$19.21	$9.35	$5.83	$0.00	$34.39
4	55	$21.13	$9.35	$5.88	$0.00	$36.36
5	65	$24.97	$9.35	$7.00	$0.00	$41.32
6	70	$26.89	$9.35	$8.06	$0.00	$44.30

Effective Date - 07/03/2016

Step	percent	Apprentice Base Wage	Health	Pension	Supplemental Unemployment	Total Rate
1	40	$15.72	$5.00	$0.47	$0.00	$21.19
2	45	$17.69	$5.00	$0.53	$0.00	$23.22
3	50	$19.66	$9.35	$5.84	$0.00	$34.85
4	55	$21.62	$9.35	$5.90	$0.00	$36.87
5	65	$25.55	$9.35	$7.02	$0.00	$41.92
6	70	$27.52	$9.35	$8.08	$0.00	$44.95

Notes: Pre-5/31/11 Begins at Step 3 $38.34/4$40.32/5$44.89/6$47.05
Steps 1-2 are 1000 hrs; Steps 3-6 are 1500 hrs.

Apprentice to Journeyworker Ratio:2:3**

ELEVATOR CONSTRUCTOR *ELEVATOR CONSTRUCTORS LOCAL 41*	01/01/2016	$48.77	$14.43	$14.96	$0.00	$78.16
	01/01/2017	$49.90	$15.28	$15.71	$0.00	$80.89

Classification	Effective Date	Base Wage	Health	Pension	Supplemental Unemployment	Total Rate

Apprentice - *ELEVATOR CONSTRUCTOR - Local 41*

Effective Date - 01/01/2016

Step	percent	Apprentice Base Wage	Health	Pension	Supplemental Unemployment	Total Rate
1	50	$24.39	$14.43	$14.96	$0.00	$53.78
2	55	$26.82	$14.43	$14.96	$0.00	$56.21
3	65	$31.70	$14.43	$14.96	$0.00	$61.09
4	70	$34.14	$14.43	$14.96	$0.00	$63.53
5	80	$39.02	$14.43	$14.96	$0.00	$68.41

Effective Date - 01/01/2017

Step	percent	Apprentice Base Wage	Health	Pension	Supplemental Unemployment	Total Rate
1	50	$24.95	$15.28	$15.71	$0.00	$55.94
2	55	$27.45	$15.28	$15.71	$0.00	$58.44
3	65	$32.44	$15.28	$15.71	$0.00	$63.43
4	70	$34.93	$15.28	$15.71	$0.00	$65.92
5	80	$39.92	$15.28	$15.71	$0.00	$70.91

Notes:

Steps 1-2 are 6 mos.; Steps 3-5 are 1 year

Apprentice to Journeyworker Ratio:1:1

ELEVATOR CONSTRUCTOR HELPER *ELEVATOR CONSTRUCTORS LOCAL 41*	01/01/2016	$34.14	$14.43	$14.96	$0.00	$63.53
	01/01/2017	$34.93	$15.28	$15.71	$0.00	$65.92
For apprentice rates see "Apprentice - ELEVATOR CONSTRUCTOR"						
FENCE & GUARD RAIL ERECTOR (HEAVY & HIGHWAY) *LABORERS - ZONE 3 (HEAVY & HIGHWAY)*	12/01/2015	$28.99	$7.45	$10.28	$0.00	$46.72
	06/01/2016	$29.49	$7.45	$10.28	$0.00	$47.22
	12/01/2016	$30.24	$7.45	$10.28	$0.00	$47.97
For apprentice rates see "Apprentice- LABORER (Heavy and Highway)						
FIELD ENG.INST/ROD-BLDG,SITE,HVY/HWY *OPERATING ENGINEERS LOCAL 98*	06/01/1999	$18.84	$4.80	$4.10	$0.00	$27.74
FIELD ENG.PARTY CHIEF:BLDG,SITE,HVY/HWY *OPERATING ENGINEERS LOCAL 98*	06/01/1999	$21.33	$4.80	$4.10	$0.00	$30.23
FIELD ENG.SURVEY CHIEF-BLDG,SITE,HVY/HWY *OPERATING ENGINEERS LOCAL 98*	06/01/1999	$22.33	$4.80	$4.10	$0.00	$31.23
FIRE ALARM INSTALLER *ELECTRICIANS LOCAL 7*	01/03/2016	$38.41	$9.35	$10.10	$0.00	$57.86
	07/03/2016	$39.31	$9.35	$10.10	$0.00	$58.76
	01/01/2017	$40.21	$9.35	$10.10	$0.00	$59.66
For apprentice rates see "Apprentice- ELECTRICIAN"						
FIRE ALARM REPAIR / MAINTENANCE / COMMISSIONING*ELECTRICIANS LOCAL 7*	01/03/2016	$38.41	$9.35	$10.10	$0.00	$57.86
	07/03/2016	$39.31	$9.35	$10.10	$0.00	$58.76
	01/01/2017	$40.21	$9.35	$10.10	$0.00	$59.66
For apprentice rates see "Apprentice- TELECOMMUNICATIONS TECHNICIAN"						
FIREMAN *OPERATING ENGINEERS LOCAL 98*	12/01/2015	$32.44	$10.18	$11.74	$0.00	$54.36

Classification	Effective Date	Base Wage	Health	Pension	Supplemental Unemployment	Total Rate

Apprentice - *OPERATING ENGINEERS - Local 98 Class 3*

Effective Date - 12/01/2015

Step	percent	Apprentice Base Wage	Health	Pension	Supplemental Unemployment	Total Rate
1	60	$19.46	$10.18	$11.74	$0.00	$41.38
2	70	$22.71	$10.18	$11.74	$0.00	$44.63
3	80	$25.95	$10.18	$11.74	$0.00	$47.87
4	90	$29.20	$10.18	$11.74	$0.00	$51.12

Notes:
Steps 1-2 are 1000 hrs.; Steps 3-4 are 2000 hrs.

Apprentice to Journeyworker Ratio:1:6

FLAGGER & SIGNALER (HEAVY & HIGHWAY) *LABORERS - ZONE 3 (HEAVY & HIGHWAY)*	12/01/2015	$20.50	$7.45	$10.28	$0.00	$38.23
	06/01/2016	$20.50	$7.45	$10.28	$0.00	$38.23
	12/01/2016	$20.50	$7.45	$10.28	$0.00	$38.23
For apprentice rates see "Apprentice- LABORER (Heavy and Highway)						
FLOORCOVERER *FLOORCOVERERS LOCAL 2168 ZONE III*	03/01/2016	$32.60	$8.55	$14.42	$0.00	$55.57

Apprentice - *FLOORCOVERER - Local 2168 Zone III*

Effective Date - 03/01/2016

Step	percent	Apprentice Base Wage	Health	Pension	Supplemental Unemployment	Total Rate
1	50	$16.30	$8.55	$1.20	$0.00	$26.05
2	55	$17.93	$8.55	$1.20	$0.00	$27.68
3	60	$19.56	$8.55	$10.82	$0.00	$38.93
4	65	$21.19	$8.55	$10.82	$0.00	$40.56
5	70	$22.82	$8.55	$12.02	$0.00	$43.39
6	75	$24.45	$8.55	$12.02	$0.00	$45.02
7	80	$26.08	$8.55	$13.22	$0.00	$47.85
8	85	$27.71	$8.55	$13.22	$0.00	$49.48

Notes:
Steps are 750 hrs.

Apprentice to Journeyworker Ratio:1:1

FORK LIFT *OPERATING ENGINEERS LOCAL 98*	12/01/2015	$32.66	$10.18	$11.74	$0.00	$54.58
For apprentice rates see "Apprentice- OPERATING ENGINEERS"						
GENERATORS/LIGHTING PLANTS *OPERATING ENGINEERS LOCAL 98*	12/01/2015	$29.21	$10.18	$11.74	$0.00	$51.13
For apprentice rates see "Apprentice- OPERATING ENGINEERS"						
GLAZIER (GLASS PLANK/AIR BARRIER/INTERIOR SYSTEMS) *GLAZIERS LOCAL 1333*	06/01/2015	$35.08	$10.25	$8.00	$0.00	$53.33
	06/01/2016	$35.58	$10.70	$8.25	$0.00	$54.53

Classification	Effective Date	Base Wage	Health	Pension	Supplemental Unemployment	Total Rate

Apprentice - *GLAZIER - Local 1333*

Effective Date - 06/01/2015

Step	percent	Apprentice Base Wage	Health	Pension	Supplemental Unemployment	Total Rate
1	50	$17.54	$10.25	$1.00	$0.00	$28.79
2	56	$19.73	$10.25	$1.00	$0.00	$30.98
3	63	$21.93	$10.25	$1.50	$0.00	$33.68
4	69	$24.12	$10.25	$1.50	$0.00	$35.87
5	75	$26.31	$10.25	$2.00	$0.00	$38.56
6	81	$28.50	$10.25	$2.00	$0.00	$40.75
7	88	$30.70	$10.25	$8.00	$0.00	$48.95
8	94	$32.89	$10.25	$8.00	$0.00	$51.14

Effective Date - 06/01/2016

Step	percent	Apprentice Base Wage	Health	Pension	Supplemental Unemployment	Total Rate
1	50	$17.79	$10.70	$1.00	$0.00	$29.49
2	56	$20.01	$10.70	$1.00	$0.00	$31.71
3	63	$22.24	$10.70	$1.50	$0.00	$34.44
4	69	$24.46	$10.70	$1.50	$0.00	$36.66
5	75	$26.69	$10.70	$2.00	$0.00	$39.39
6	81	$28.91	$10.70	$2.00	$0.00	$41.61
7	88	$31.13	$10.70	$8.00	$0.00	$49.83
8	94	$33.36	$10.70	$8.00	$0.00	$52.06

Notes:

Apprentice to Journeyworker Ratio:1:3

GRADER/TRENCHING MACHINE/DERRICK *OPERATING ENGINEERS LOCAL 98*	12/01/2015	$32.97	$10.18	$11.74	$0.00	$54.89
For apprentice rates see "Apprentice- OPERATING ENGINEERS"						
HVAC (DUCTWORK) *SHEETMETAL WORKERS LOCAL 63*	01/01/2016	$31.57	$10.54	$14.86	$1.70	$58.67
	07/01/2016	$32.28	$10.54	$14.90	$1.70	$59.42
	01/01/2017	$33.03	$10.54	$14.90	$1.70	$60.17
For apprentice rates see "Apprentice- SHEET METAL WORKER"						
HVAC (ELECTRICAL CONTROLS) *ELECTRICIANS LOCAL 7*	01/03/2016	$38.41	$9.35	$10.10	$0.00	$57.86
	07/03/2016	$39.31	$9.35	$10.10	$0.00	$58.76
	01/01/2017	$40.21	$9.35	$10.10	$0.00	$59.66
For apprentice rates see "Apprentice- ELECTRICIAN"						
HVAC (TESTING AND BALANCING - AIR) *SHEETMETAL WORKERS LOCAL 63*	01/01/2016	$31.57	$10.54	$14.86	$1.70	$58.67
	07/01/2016	$32.28	$10.54	$14.90	$1.70	$59.42
	01/01/2017	$33.03	$10.54	$14.90	$1.70	$60.17
For apprentice rates see "Apprentice- SHEET METAL WORKER"						
HVAC (TESTING AND BALANCING -WATER) *PLUMBERS & PIPEFITTERS LOCAL 104*	03/17/2016	$38.26	$8.45	$15.05	$0.00	$61.76
For apprentice rates see "Apprentice- PIPEFITTER" or "PLUMBER/PIPEFITTER"						

Classification	Effective Date	Base Wage	Health	Pension	Supplemental Unemployment	Total Rate
HVAC MECHANIC *PLUMBERS & PIPEFITTERS LOCAL 104*	03/17/2016	$38.26	$8.45	$15.05	$0.00	$61.76
For apprentice rates see "Apprentice- PIPEFITTER" or "PLUMBER/PIPEFITTER"						
HYDRAULIC DRILLS (HEAVY & HIGHWAY) *LABORERS - ZONE 3 (HEAVY & HIGHWAY)*	12/01/2015	$29.49	$7.45	$10.28	$0.00	$47.22
	06/01/2016	$29.99	$7.45	$10.28	$0.00	$47.72
	12/01/2016	$30.74	$7.45	$10.28	$0.00	$48.47
For apprentice rates see "Apprentice- LABORER (Heavy and Highway)						
INSULATOR (PIPES & TANKS) *HEAT & FROST INSULATORS LOCAL 6 (SPRINGFIELD)*	09/01/2015	$35.05	$11.50	$13.80	$0.00	$60.35
	09/01/2016	$36.65	$11.50	$13.80	$0.00	$61.95
	09/01/2017	$38.25	$11.50	$13.80	$0.00	$63.55
	09/01/2018	$40.05	$11.50	$13.80	$0.00	$65.35
	09/01/2019	$42.05	$11.50	$13.80	$0.00	$67.35

Apprentice - *ASBESTOS INSULATOR (Pipes & Tanks) - Local 6 Springfield*

Effective Date - 09/01/2015

Step	percent	Apprentice Base Wage	Health	Pension	Supplemental Unemployment	Total Rate
1	50	$17.53	$11.50	$10.05	$0.00	$39.08
2	60	$21.03	$11.50	$10.80	$0.00	$43.33
3	70	$24.54	$11.50	$11.55	$0.00	$47.59
4	80	$28.04	$11.50	$12.30	$0.00	$51.84

Effective Date - 09/01/2016

Step	percent	Apprentice Base Wage	Health	Pension	Supplemental Unemployment	Total Rate
1	50	$18.33	$11.50	$10.05	$0.00	$39.88
2	60	$21.99	$11.50	$10.80	$0.00	$44.29
3	70	$25.66	$11.50	$11.55	$0.00	$48.71
4	80	$29.32	$11.50	$12.30	$0.00	$53.12

Notes:
Steps are 1 year

Apprentice to Journeyworker Ratio:1:4

IRONWORKER/WELDER *IRONWORKERS LOCAL 7 (SPRINGFIELD AREA)*	03/16/2016	$31.09	$7.80	$19.60	$0.00	$58.49
	09/16/2016	$31.74	$7.80	$19.60	$0.00	$59.14
	03/16/2017	$32.39	$7.80	$19.60	$0.00	$59.79

Classification	Effective Date	Base Wage	Health	Pension	Supplemental Unemployment	Total Rate

Apprentice - *IRONWORKER - Local 7 Springfield*

Effective Date - 03/16/2016

Step	percent	Apprentice Base Wage	Health	Pension	Supplemental Unemployment	Total Rate
1	60	$18.65	$7.80	$19.60	$0.00	$46.05
2	70	$21.76	$7.80	$19.60	$0.00	$49.16
3	75	$23.32	$7.80	$19.60	$0.00	$50.72
4	80	$24.87	$7.80	$19.60	$0.00	$52.27
5	85	$26.43	$7.80	$19.60	$0.00	$53.83
6	90	$27.98	$7.80	$19.60	$0.00	$55.38

Effective Date - 09/16/2016

Step	percent	Apprentice Base Wage	Health	Pension	Supplemental Unemployment	Total Rate
1	60	$19.04	$7.80	$19.60	$0.00	$46.44
2	70	$22.22	$7.80	$19.60	$0.00	$49.62
3	75	$23.81	$7.80	$19.60	$0.00	$51.21
4	80	$25.39	$7.80	$19.60	$0.00	$52.79
5	85	$26.98	$7.80	$19.60	$0.00	$54.38
6	90	$28.57	$7.80	$19.60	$0.00	$55.97

Notes:

Structural 1:6; Ornamental 1:4

Apprentice to Journeyworker Ratio:

JACKHAMMER & PAVING BREAKER OPERATOR *LABORERS - ZONE 3 (BUILDING & SITE)*	12/07/2015	$29.25	$7.45	$11.86	$0.00	$48.56
	06/06/2016	$29.94	$7.45	$11.86	$0.00	$49.25
	12/05/2016	$30.62	$7.45	$11.86	$0.00	$49.93
For apprentice rates see "Apprentice- LABORER"						
LABORER *LABORERS - ZONE 3 (BUILDING & SITE)*	12/07/2015	$29.00	$7.45	$11.86	$0.00	$48.31
	06/06/2016	$29.69	$7.45	$11.86	$0.00	$49.00
	12/05/2016	$30.37	$7.45	$11.86	$0.00	$49.68

Classification	Effective Date	Base Wage	Health	Pension	Supplemental Unemployment	Total Rate

Apprentice - *LABORER - Zone 3 Building & Site*

Effective Date - 12/07/2015

Step	percent	Apprentice Base Wage	Health	Pension	Supplemental Unemployment	Total Rate
1	60	$17.40	$7.45	$11.86	$0.00	$36.71
2	70	$20.30	$7.45	$11.86	$0.00	$39.61
3	80	$23.20	$7.45	$11.86	$0.00	$42.51
4	90	$26.10	$7.45	$11.86	$0.00	$45.41

Effective Date - 06/06/2016

Step	percent	Apprentice Base Wage	Health	Pension	Supplemental Unemployment	Total Rate
1	60	$17.81	$7.45	$11.86	$0.00	$37.12
2	70	$20.78	$7.45	$11.86	$0.00	$40.09
3	80	$23.75	$7.45	$11.86	$0.00	$43.06
4	90	$26.72	$7.45	$11.86	$0.00	$46.03

Notes:

Apprentice to Journeyworker Ratio:1:5

LABORER (HEAVY & HIGHWAY) *LABORERS - ZONE 3 (HEAVY & HIGHWAY)*	12/01/2015	$28.74	$7.45	$10.28	$0.00	$46.47
	06/01/2016	$29.24	$7.45	$10.28	$0.00	$46.97
	12/01/2016	$29.99	$7.45	$10.28	$0.00	$47.72

Apprentice - *LABORER (Heavy & Highway) - Zone 3*

Effective Date - 12/01/2015

Step	percent	Apprentice Base Wage	Health	Pension	Supplemental Unemployment	Total Rate
1	60	$17.24	$7.45	$10.28	$0.00	$34.97
2	70	$20.12	$7.45	$10.28	$0.00	$37.85
3	80	$22.99	$7.45	$10.28	$0.00	$40.72
4	90	$25.87	$7.45	$10.28	$0.00	$43.60

Effective Date - 06/01/2016

Step	percent	Apprentice Base Wage	Health	Pension	Supplemental Unemployment	Total Rate
1	60	$17.54	$7.45	$10.28	$0.00	$35.27
2	70	$20.47	$7.45	$10.28	$0.00	$38.20
3	80	$23.39	$7.45	$10.28	$0.00	$41.12
4	90	$26.32	$7.45	$10.28	$0.00	$44.05

Notes:

Apprentice to Journeyworker Ratio:1:5

LABORER: CARPENTER TENDER *LABORERS - ZONE 3 (BUILDING & SITE)*	12/07/2015	$29.00	$7.45	$11.86	$0.00	$48.31
	06/06/2016	$29.69	$7.45	$11.86	$0.00	$49.00
	12/05/2016	$30.37	$7.45	$11.86	$0.00	$49.68

Classification	Effective Date	Base Wage	Health	Pension	Supplemental Unemployment	Total Rate
For apprentice rates see "Apprentice- LABORER"						
LABORER: CEMENT FINISHER TENDER *LABORERS - ZONE 3 (BUILDING & SITE)*	12/07/2015	$29.25	$7.45	$11.86	$0.00	$48.56
	06/06/2016	$29.94	$7.45	$11.86	$0.00	$49.25
	12/05/2016	$30.62	$7.45	$11.86	$0.00	$49.93
For apprentice rates see "Apprentice- LABORER"						
LABORER: HAZARDOUS WASTE/ASBESTOS REMOVER *LABORERS - ZONE 3 (BUILDING & SITE)*	12/07/2015	$29.10	$7.45	$11.86	$0.00	$48.41
For apprentice rates see "Apprentice- LABORER"						
LABORER: MASON TENDER *LABORERS - ZONE 3 (BUILDING & SITE)*	12/07/2015	$30.00	$7.45	$11.86	$0.00	$49.31
	06/06/2016	$30.69	$7.45	$11.86	$0.00	$50.00
	12/05/2016	$31.37	$7.45	$11.86	$0.00	$50.68
For apprentice rates see "Apprentice- LABORER"						
LABORER: MASON TENDER (HEAVY & HIGHWAY) *LABORERS - ZONE 3 (HEAVY & HIGHWAY)*	12/01/2015	$28.99	$7.45	$10.28	$0.00	$46.72
	06/01/2016	$29.49	$7.45	$10.28	$0.00	$47.22
	12/01/2016	$30.24	$7.45	$10.28	$0.00	$47.97
For apprentice rates see "Apprentice- LABORER (Heavy and Highway)						
LABORER: MULTI-TRADE TENDER *LABORERS - ZONE 3 (BUILDING & SITE)*	12/07/2015	$29.00	$7.45	$11.86	$0.00	$48.31
	06/06/2016	$29.69	$7.45	$11.86	$0.00	$49.00
	12/05/2016	$30.37	$7.45	$11.86	$0.00	$49.68
For apprentice rates see "Apprentice- LABORER"						
LABORER: TREE REMOVER *LABORERS - ZONE 3 (BUILDING & SITE)*	12/07/2015	$29.00	$7.45	$11.86	$0.00	$48.31
	06/06/2016	$29.69	$7.45	$11.86	$0.00	$49.00
	12/05/2016	$30.37	$7.45	$11.86	$0.00	$49.68
This classification applies to all tree work associated with the removal of standing trees, and trimming and removal of branches and limbs when the work is not done for a utility company for the purpose of operation, maintenance or repair of utility company equipment. For apprentice rates see "Apprentice- LABORER"						
LASER BEAM OPERATOR *LABORERS - ZONE 3 (BUILDING & SITE)*	12/07/2015	$29.25	$7.45	$11.86	$0.00	$48.56
	06/06/2016	$29.94	$7.45	$11.86	$0.00	$49.25
	12/05/2016	$30.62	$7.45	$11.86	$0.00	$49.93
For apprentice rates see "Apprentice- LABORER"						
LASER BEAM OPERATOR (HEAVY & HIGHWAY) *LABORERS - ZONE 3 (HEAVY & HIGHWAY)*	12/01/2015	$28.99	$7.45	$10.28	$0.00	$46.72
	06/01/2016	$29.49	$7.45	$10.28	$0.00	$47.22
	12/01/2016	$30.24	$7.45	$10.28	$0.00	$47.97
For apprentice rates see "Apprentice- LABORER (Heavy and Highway)						
MARBLE & TILE FINISHERS *BRICKLAYERS LOCAL 3 (SPR/PITT) - MARBLE & TILE*	02/29/2016	$31.76	$10.18	$16.98	$0.00	$58.92
	09/05/2016	$32.67	$10.18	$17.05	$0.00	$59.90
	02/27/2017	$33.24	$10.18	$17.05	$0.00	$60.47

Classification	Effective Date	Base Wage	Health	Pension	Supplemental Unemployment	Total Rate

Apprentice - *MARBLE-TILE-TERRAZZO FINISHER-Local 3 Marble/Tile (Spr/Pitt)*

Effective Date - 02/29/2016

Step	percent	Apprentice Base Wage	Health	Pension	Supplemental Unemployment	Total Rate
1	50	$15.88	$10.18	$16.98	$0.00	$43.04
2	60	$19.06	$10.18	$16.98	$0.00	$46.22
3	70	$22.23	$10.18	$16.98	$0.00	$49.39
4	80	$25.41	$10.18	$16.98	$0.00	$52.57
5	90	$28.58	$10.18	$16.98	$0.00	$55.74

Effective Date - 09/05/2016

Step	percent	Apprentice Base Wage	Health	Pension	Supplemental Unemployment	Total Rate
1	50	$16.34	$10.18	$17.05	$0.00	$43.57
2	60	$19.60	$10.18	$17.05	$0.00	$46.83
3	70	$22.87	$10.18	$17.05	$0.00	$50.10
4	80	$26.14	$10.18	$17.05	$0.00	$53.37
5	90	$29.40	$10.18	$17.05	$0.00	$56.63

Notes:

Apprentice to Journeyworker Ratio:1:5

MARBLE MASONS,TILELAYERS & TERRAZZO MECH *BRICKLAYERS LOCAL 3 (SPR/PITT) - MARBLE & TILE*	02/29/2016	$38.36	$10.18	$17.30	$0.00	$65.84
	09/05/2016	$39.26	$10.18	$17.38	$0.00	$66.82
	02/27/2017	$39.83	$10.18	$17.38	$0.00	$67.39

Classification	Effective Date	Base Wage	Health	Pension	Supplemental Unemployment	Total Rate

Apprentice - *MARBLE-TILE-TERRAZZO MECH - Local 3 Marble/Tile (Spr/Pitt)*

Effective Date - 02/29/2016

Step	percent	Apprentice Base Wage	Health	Pension	Supplemental Unemployment	Total Rate
1	50	$19.18	$10.18	$17.30	$0.00	$46.66
2	60	$23.02	$10.18	$17.30	$0.00	$50.50
3	70	$26.85	$10.18	$17.30	$0.00	$54.33
4	80	$30.69	$10.18	$17.30	$0.00	$58.17
5	90	$34.52	$10.18	$17.30	$0.00	$62.00

Effective Date - 09/05/2016

Step	percent	Apprentice Base Wage	Health	Pension	Supplemental Unemployment	Total Rate
1	50	$19.63	$10.18	$17.38	$0.00	$47.19
2	60	$23.56	$10.18	$17.38	$0.00	$51.12
3	70	$27.48	$10.18	$17.38	$0.00	$55.04
4	80	$31.41	$10.18	$17.38	$0.00	$58.97
5	90	$35.33	$10.18	$17.38	$0.00	$62.89

Notes:

Apprentice to Journeyworker Ratio:1:5

MECH. SWEEPER OPERATOR (ON CONST. SITES) *OPERATING ENGINEERS LOCAL 98*	12/01/2015	$32.97	$10.18	$11.74	$0.00	$54.89
For apprentice rates see "Apprentice- OPERATING ENGINEERS"						
MECHANIC/WELDER/BOOM TRUCK *OPERATING ENGINEERS LOCAL 98*	12/01/2015	$32.44	$10.18	$11.74	$0.00	$54.36
For apprentice rates see "Apprentice- OPERATING ENGINEERS"						
MILLWRIGHT (Zone 3) *MILLWRIGHTS LOCAL 1121 - Zone 3*	04/01/2015	$33.13	$9.80	$16.21	$0.00	$59.14

Apprentice - *MILLWRIGHT - Local 1121 Zone 3*

Effective Date - 04/01/2015

Step	percent	Apprentice Base Wage	Health	Pension	Supplemental Unemployment	Total Rate
1	55	$18.22	$9.80	$4.48	$0.00	$32.50
2	65	$21.53	$9.80	$13.36	$0.00	$44.69
3	75	$24.85	$9.80	$14.18	$0.00	$48.83
4	85	$28.16	$9.80	$14.99	$0.00	$52.95

Notes:

Steps are 2,000 hours

Apprentice to Journeyworker Ratio:1:5

MORTAR MIXER *LABORERS - ZONE 3 (BUILDING & SITE)*	12/07/2015	$29.25	$7.45	$11.86	$0.00	$48.56
	06/06/2016	$29.94	$7.45	$11.86	$0.00	$49.25
	12/05/2016	$30.62	$7.45	$11.86	$0.00	$49.93
For apprentice rates see "Apprentice- LABORER"						

Classification	Effective Date	Base Wage	Health	Pension	Supplemental Unemployment	Total Rate
OILER *OPERATING ENGINEERS LOCAL 98* For apprentice rates see "Apprentice- OPERATING ENGINEERS"	12/01/2015	$28.13	$10.18	$11.74	$0.00	$50.05
OTHER POWER DRIVEN EQUIPMENT - CLASS VI *OPERATING ENGINEERS LOCAL 98* For apprentice rates see "Apprentice- OPERATING ENGINEERS"	12/01/2015	$26.15	$10.18	$11.74	$0.00	$48.07
PAINTER (BRIDGES/TANKS) *PAINTERS LOCAL 35 - ZONE 3*	01/01/2016	$49.51	$7.85	$16.10	$0.00	$73.46
	07/01/2016	$50.46	$7.85	$16.10	$0.00	$74.41
	01/01/2017	$51.41	$7.85	$16.10	$0.00	$75.36

Apprentice - *PAINTER Local 35 - BRIDGES/TANKS*

Effective Date - 01/01/2016

Step	percent	Apprentice Base Wage	Health	Pension	Supplemental Unemployment	Total Rate
1	50	$24.76	$7.85	$0.00	$0.00	$32.61
2	55	$27.23	$7.85	$3.66	$0.00	$38.74
3	60	$29.71	$7.85	$3.99	$0.00	$41.55
4	65	$32.18	$7.85	$4.32	$0.00	$44.35
5	70	$34.66	$7.85	$14.11	$0.00	$56.62
6	75	$37.13	$7.85	$14.44	$0.00	$59.42
7	80	$39.61	$7.85	$14.77	$0.00	$62.23
8	90	$44.56	$7.85	$15.44	$0.00	$67.85

Effective Date - 07/01/2016

Step	percent	Apprentice Base Wage	Health	Pension	Supplemental Unemployment	Total Rate
1	50	$25.23	$7.85	$0.00	$0.00	$33.08
2	55	$27.75	$7.85	$3.66	$0.00	$39.26
3	60	$30.28	$7.85	$3.99	$0.00	$42.12
4	65	$32.80	$7.85	$4.32	$0.00	$44.97
5	70	$35.32	$7.85	$14.11	$0.00	$57.28
6	75	$37.85	$7.85	$14.44	$0.00	$60.14
7	80	$40.37	$7.85	$14.77	$0.00	$62.99
8	90	$45.41	$7.85	$15.44	$0.00	$68.70

Notes:

Steps are 750 hrs.

Apprentice to Journeyworker Ratio:1:1

PAINTER (SPRAY OR SANDBLAST, NEW) * * If 30% or more of surfaces to be painted are new construction, NEW paint rate shall be used.*PAINTERS LOCAL 35 - ZONE 3*	01/01/2016	$32.93	$7.85	$12.30	$0.00	$53.08
	07/01/2016	$33.78	$7.85	$12.30	$0.00	$53.93
	01/01/2017	$34.68	$7.85	$12.30	$0.00	$54.83

Classification	Effective Date	Base Wage	Health	Pension	Supplemental Unemployment	Total Rate

Apprentice - *PAINTER Local 35 Zone 3 - Spray/Sandblast - New*

Effective Date - 01/01/2016

Step	percent	Apprentice Base Wage	Health	Pension	Supplemental Unemployment	Total Rate
1	50	$16.47	$7.85	$0.00	$0.00	$24.32
2	55	$18.11	$7.85	$1.57	$0.00	$27.53
3	60	$19.76	$7.85	$1.71	$0.00	$29.32
4	65	$21.40	$7.85	$1.85	$0.00	$31.10
5	70	$23.05	$7.85	$11.45	$0.00	$42.35
6	75	$24.70	$7.85	$11.59	$0.00	$44.14
7	80	$26.34	$7.85	$11.73	$0.00	$45.92
8	90	$29.64	$7.85	$12.02	$0.00	$49.51

Effective Date - 07/01/2016

Step	percent	Apprentice Base Wage	Health	Pension	Supplemental Unemployment	Total Rate
1	50	$16.89	$7.85	$0.00	$0.00	$24.74
2	55	$18.58	$7.85	$1.57	$0.00	$28.00
3	60	$20.27	$7.85	$1.71	$0.00	$29.83
4	65	$21.96	$7.85	$1.85	$0.00	$31.66
5	70	$23.65	$7.85	$11.45	$0.00	$42.95
6	75	$25.34	$7.85	$11.59	$0.00	$44.78
7	80	$27.02	$7.85	$11.73	$0.00	$46.60
8	90	$30.40	$7.85	$12.02	$0.00	$50.27

Notes:

Steps are 750 hrs.

Apprentice to Journeyworker Ratio:1:1

PAINTER (SPRAY OR SANDBLAST, REPAINT) *PAINTERS LOCAL 35 - ZONE 3*	01/01/2016	$30.25	$7.85	$12.30	$0.00	$50.40
	07/01/2016	$31.11	$7.85	$12.30	$0.00	$51.26
	01/01/2017	$32.00	$7.85	$12.30	$0.00	$52.15

Classification	Effective Date	Base Wage	Health	Pension	Supplemental Unemployment	Total Rate

Apprentice - *PAINTER Local 35 Zone 3 - Spray/Sandblast - Repaint*

Effective Date - 01/01/2016

Step	percent	Apprentice Base Wage	Health	Pension	Supplemental Unemployment	Total Rate
1	50	$15.13	$7.85	$0.00	$0.00	$22.98
2	55	$16.64	$7.85	$1.57	$0.00	$26.06
3	60	$18.15	$7.85	$1.71	$0.00	$27.71
4	65	$19.66	$7.85	$1.85	$0.00	$29.36
5	70	$21.18	$7.85	$11.45	$0.00	$40.48
6	75	$22.69	$7.85	$11.59	$0.00	$42.13
7	80	$24.20	$7.85	$11.73	$0.00	$43.78
8	90	$27.23	$7.85	$12.02	$0.00	$47.10

Effective Date - 07/01/2016

Step	percent	Apprentice Base Wage	Health	Pension	Supplemental Unemployment	Total Rate
1	50	$15.56	$7.85	$0.00	$0.00	$23.41
2	55	$17.11	$7.85	$1.57	$0.00	$26.53
3	60	$18.67	$7.85	$1.71	$0.00	$28.23
4	65	$20.22	$7.85	$1.85	$0.00	$29.92
5	70	$21.78	$7.85	$11.45	$0.00	$41.08
6	75	$23.33	$7.85	$11.59	$0.00	$42.77
7	80	$24.89	$7.85	$11.73	$0.00	$44.47
8	90	$28.00	$7.85	$12.02	$0.00	$47.87

Notes:

Steps are 750 hrs.

Apprentice to Journeyworker Ratio:1:1

PAINTER / TAPER (BRUSH, NEW) *	01/01/2016	$31.53	$7.85	$12.30	$0.00	$51.68
* If 30% or more of surfaces to be painted are new construction, NEW paint rate shall be used.*PAINTERS LOCAL 35 - ZONE 3*	07/01/2016	$32.38	$7.85	$12.30	$0.00	$52.53
	01/01/2017	$33.28	$7.85	$12.30	$0.00	$53.43

Classification	Effective Date	Base Wage	Health	Pension	Supplemental Unemployment	Total Rate

Apprentice - *PAINTER - Local 35 Zone 3 - BRUSH NEW*

Effective Date - 01/01/2016

Step	percent	Apprentice Base Wage	Health	Pension	Supplemental Unemployment	Total Rate
1	50	$15.77	$7.85	$0.00	$0.00	$23.62
2	55	$17.34	$7.85	$1.57	$0.00	$26.76
3	60	$18.92	$7.85	$1.71	$0.00	$28.48
4	65	$20.49	$7.85	$1.85	$0.00	$30.19
5	70	$22.07	$7.85	$11.45	$0.00	$41.37
6	75	$23.65	$7.85	$11.59	$0.00	$43.09
7	80	$25.22	$7.85	$11.73	$0.00	$44.80
8	90	$28.38	$7.85	$12.02	$0.00	$48.25

Effective Date - 07/01/2016

Step	percent	Apprentice Base Wage	Health	Pension	Supplemental Unemployment	Total Rate
1	50	$16.19	$7.85	$0.00	$0.00	$24.04
2	55	$17.81	$7.85	$1.57	$0.00	$27.23
3	60	$19.43	$7.85	$1.71	$0.00	$28.99
4	65	$21.05	$7.85	$1.85	$0.00	$30.75
5	70	$22.67	$7.85	$11.45	$0.00	$41.97
6	75	$24.29	$7.85	$11.59	$0.00	$43.73
7	80	$25.90	$7.85	$11.73	$0.00	$45.48
8	90	$29.14	$7.85	$12.02	$0.00	$49.01

Notes:

Steps are 750 hrs.

Apprentice to Journeyworker Ratio:1:1

PAINTER / TAPER (BRUSH, REPAINT) *PAINTERS LOCAL 35 - ZONE 3*	01/01/2016	$28.85	$7.85	$12.30	$0.00	$49.00
	07/01/2016	$29.70	$7.85	$12.30	$0.00	$49.85
	01/01/2017	$30.60	$7.85	$12.30	$0.00	$50.75

Classification	Effective Date	Base Wage	Health	Pension	Supplemental Unemployment	Total Rate

Apprentice - *PAINTER Local 35 Zone 3 - BRUSH REPAINT*

Effective Date - 01/01/2016

Step	percent	Apprentice Base Wage	Health	Pension	Supplemental Unemployment	Total Rate
1	50	$14.43	$7.85	$0.00	$0.00	$22.28
2	55	$15.87	$7.85	$1.57	$0.00	$25.29
3	60	$17.31	$7.85	$1.71	$0.00	$26.87
4	65	$18.75	$7.85	$1.85	$0.00	$28.45
5	70	$20.20	$7.85	$11.45	$0.00	$39.50
6	75	$21.64	$7.85	$11.59	$0.00	$41.08
7	80	$23.08	$7.85	$11.73	$0.00	$42.66
8	90	$25.97	$7.85	$12.02	$0.00	$45.84

Effective Date - 07/01/2016

Step	percent	Apprentice Base Wage	Health	Pension	Supplemental Unemployment	Total Rate
1	50	$14.85	$7.85	$0.00	$0.00	$22.70
2	55	$16.34	$7.85	$1.57	$0.00	$25.76
3	60	$17.82	$7.85	$1.71	$0.00	$27.38
4	65	$19.31	$7.85	$1.85	$0.00	$29.01
5	70	$20.79	$7.85	$11.45	$0.00	$40.09
6	75	$22.28	$7.85	$11.59	$0.00	$41.72
7	80	$23.76	$7.85	$11.73	$0.00	$43.34
8	90	$26.73	$7.85	$12.02	$0.00	$46.60

Notes:

Steps are 750 hrs.

Apprentice to Journeyworker Ratio:1:1

PAINTER TRAFFIC MARKINGS (HEAVY/HIGHWAY) *LABORERS - ZONE 3 (HEAVY & HIGHWAY)*	12/01/2015	$28.74	$7.45	$10.28	$0.00	$46.47
	06/01/2016	$29.24	$7.45	$10.28	$0.00	$46.97
	12/01/2016	$29.99	$7.45	$10.28	$0.00	$47.72
For apprentice rates see "Apprentice- LABORER (Heavy and Highway)						
PANEL & PICKUP TRUCKS DRIVER *TEAMSTERS JOINT COUNCIL NO. 10 ZONE B*	12/01/2012	$30.28	$9.07	$8.00	$0.00	$47.35
PIER AND DOCK CONSTRUCTOR (UNDERPINNING AND DECK) *PILE DRIVER LOCAL 56 (ZONE 3)*	08/31/2015	$39.00	$9.80	$18.17	$0.00	$66.97
For apprentice rates see "Apprentice- PILE DRIVER"						
PILE DRIVER *PILE DRIVER LOCAL 56 (ZONE 3)*	08/31/2015	$39.00	$9.80	$18.17	$0.00	$66.97

Classification	Effective Date	Base Wage	Health	Pension	Supplemental Unemployment	Total Rate

Apprentice - *PILE DRIVER - Local 56 Zone 3*

Effective Date - 08/31/2015

Step	percent	Apprentice Base Wage	Health	Pension	Supplemental Unemployment	Total Rate
1	0	$0.00	$0.00	$0.00	$0.00	$0.00

Notes: Apprentice wages shall be no less than the following Steps;
(Same as set in Zone 1)
1$50.05/2$54.25/3$58.46/4$60.56/5$62.66/6$62.66/7$66.87/8$66.87

Apprentice to Journeyworker Ratio:1:3

PIPELAYER *LABORERS - ZONE 3 (BUILDING & SITE)*	12/07/2015	$29.25	$7.45	$11.86	$0.00	$48.56
	06/06/2016	$29.94	$7.45	$11.86	$0.00	$49.25
	12/05/2016	$30.62	$7.45	$11.86	$0.00	$49.93
For apprentice rates see "Apprentice- LABORER"						
PIPELAYER (HEAVY & HIGHWAY) *LABORERS - ZONE 3 (HEAVY & HIGHWAY)*	12/01/2015	$28.99	$7.45	$10.28	$0.00	$46.72
	06/01/2016	$29.49	$7.45	$10.28	$0.00	$47.22
	12/01/2016	$30.24	$7.45	$10.28	$0.00	$47.97
For apprentice rates see "Apprentice- LABORER (Heavy and Highway)"						
PLUMBER & PIPEFITTER *PLUMBERS & PIPEFITTERS LOCAL 104*	03/17/2016	$38.26	$8.45	$15.05	$0.00	$61.76

Apprentice - *PLUMBER/PIPEFITTER - Local 104*

Effective Date - 03/17/2016

Step	percent	Apprentice Base Wage	Health	Pension	Supplemental Unemployment	Total Rate
1	45	$17.22	$8.45	$9.05	$0.00	$34.72
2	50	$19.13	$8.45	$9.05	$0.00	$36.63
3	60	$22.96	$8.45	$9.05	$0.00	$40.46
4	70	$26.78	$8.45	$9.05	$0.00	$44.28
5	80	$30.61	$8.45	$15.05	$0.00	$54.11

Notes:
Steps are 2000 hrs.

Apprentice to Journeyworker Ratio:1:5

PNEUMATIC CONTROLS (TEMP.) *PLUMBERS & PIPEFITTERS LOCAL 104*	03/17/2016	$38.26	$8.45	$15.05	$0.00	$61.76
For apprentice rates see "Apprentice- PIPEFITTER" or "PLUMBER/PIPEFITTER"						
PNEUMATIC DRILL/TOOL OPERATOR (HEAVY & HIGHWAY) *LABORERS - ZONE 3 (HEAVY & HIGHWAY)*	12/01/2015	$28.99	$7.45	$10.28	$0.00	$46.72
	06/01/2016	$29.49	$7.45	$10.28	$0.00	$47.22
	12/01/2016	$30.24	$7.45	$10.28	$0.00	$47.97
For apprentice rates see "Apprentice- LABORER (Heavy and Highway)"						
POWDERMAN & BLASTER *LABORERS - ZONE 3 (BUILDING & SITE)*	12/07/2015	$30.00	$7.45	$11.86	$0.00	$49.31
	06/06/2016	$30.69	$7.45	$11.86	$0.00	$50.00
	12/05/2016	$31.37	$7.45	$11.86	$0.00	$50.68
For apprentice rates see "Apprentice- LABORER"						

Classification	Effective Date	Base Wage	Health	Pension	Supplemental Unemployment	Total Rate
POWDERMAN & BLASTER (HEAVY & HIGHWAY) *LABORERS - ZONE 3 (HEAVY & HIGHWAY)*	12/01/2015	$29.74	$7.45	$10.28	$0.00	$47.47
	06/01/2016	$30.24	$7.45	$10.28	$0.00	$47.97
	12/01/2016	$30.99	$7.45	$10.28	$0.00	$48.72
For apprentice rates see "Apprentice- LABORER (Heavy and Highway)						
PUMP OPERATOR (CONCRETE) *OPERATING ENGINEERS LOCAL 98*	12/01/2015	$32.97	$10.18	$11.74	$0.00	$54.89
For apprentice rates see "Apprentice- OPERATING ENGINEERS"						
PUMP OPERATOR (DEWATERING, OTHER) *OPERATING ENGINEERS LOCAL 98*	12/01/2015	$32.44	$10.18	$11.74	$0.00	$54.36
For apprentice rates see "Apprentice- OPERATING ENGINEERS"						
READY-MIX CONCRETE DRIVER *TEAMSTERS LOCAL 404*	05/01/2015	$20.78	$9.92	$9.09	$0.00	$39.79
	05/01/2016	$21.01	$10.23	$9.40	$0.00	$40.64
RESIDENTIAL WOOD FRAME CARPENTER ** ** The Residential Wood Frame Carpenter classification applies only to the construction of new, wood frame residences that do not exceed four stories including the basement.*CARPENTERS LOCAL 108 - HAMPDEN HAMPSHIRE*	02/29/2016	$26.81	$7.20	$5.35	$0.00	$39.36
As of 9/1/09 Carpentry work on wood-frame residential WEATHERIZATION projects shall be paid the RESIDENTIAL WOOD FRAME CARPENTER rate.						

Apprentice - *CARPENTER (Residential Wood Frame) - 108 Hampden Hampshire*

Effective Date - 02/29/2016

Step	percent	Apprentice Base Wage	Health	Pension	Supplemental Unemployment	Total Rate
1	60	$16.09	$7.20	$0.00	$0.00	$23.29
2	60	$16.09	$7.20	$5.35	$0.00	$28.64
3	65	$17.43	$7.20	$5.35	$0.00	$29.98
4	70	$18.77	$7.20	$5.35	$0.00	$31.32
5	75	$20.11	$7.20	$5.35	$0.00	$32.66
6	80	$21.45	$7.20	$5.35	$0.00	$34.00
7	85	$22.79	$7.20	$5.35	$0.00	$35.34
8	90	$24.13	$7.20	$5.35	$0.00	$36.68

Notes:

** 1: 1-5, 2: 6-8, 3: 9-11

Apprentice to Journeyworker Ratio:**

RIDE-ON MOTORIZED BUGGY OPERATOR *LABORERS - ZONE 3 (BUILDING & SITE)*	12/07/2015	$29.25	$7.45	$11.86	$0.00	$48.56
	06/06/2016	$29.94	$7.45	$11.86	$0.00	$49.25
	12/05/2016	$30.62	$7.45	$11.86	$0.00	$49.93
For apprentice rates see "Apprentice- LABORER"						
ROLLER OPERATOR *OPERATING ENGINEERS LOCAL 98*	12/01/2015	$31.83	$10.18	$11.74	$0.00	$53.75
For apprentice rates see "Apprentice- OPERATING ENGINEERS"						
ROOFER (Coal tar pitch) *ROOFERS LOCAL 248*	07/16/2015	$29.75	$9.00	$13.25	$0.00	$52.00
For apprentice rates see "Apprentice- ROOFER"						
ROOFER (Inc.Roofer Waterproofng &Roofer Damproofg) *ROOFERS LOCAL 248*	07/16/2015	$29.25	$9.00	$12.75	$0.00	$51.00

Classification	Effective Date	Base Wage	Health	Pension	Supplemental Unemployment	Total Rate

Apprentice - *ROOFER - Local 248*

Effective Date - 07/16/2015

Step	percent	Apprentice Base Wage	Health	Pension	Supplemental Unemployment	Total Rate
1	60	$17.55	$9.00	$0.00	$0.00	$26.55
2	65	$19.01	$9.00	$12.75	$0.00	$40.76
3	70	$20.48	$9.00	$12.75	$0.00	$42.23
4	75	$21.94	$9.00	$12.75	$0.00	$43.69
5	80	$23.40	$9.00	$12.75	$0.00	$45.15
6	85	$24.86	$9.00	$12.75	$0.00	$46.61
7	90	$26.33	$9.00	$12.75	$0.00	$48.08
8	95	$27.79	$9.00	$12.75	$0.00	$49.54

Notes:

Steps are 750 hrs.Roofer(Tear Off)1:1; Same as above

Apprentice to Journeyworker Ratio:1:3

ROOFER SLATE / TILE / PRECAST CONCRETE *ROOFERS LOCAL 248*	07/16/2015	$29.75	$9.00	$13.25	$0.00	$52.00
For apprentice rates see "Apprentice- ROOFER"						
SCRAPER *OPERATING ENGINEERS LOCAL 98*	12/01/2015	$32.44	$10.18	$11.74	$0.00	$54.36
For apprentice rates see "Apprentice- OPERATING ENGINEERS"						
SELF-POWERED ROLLERS AND COMPACTORS (TAMPERS) *OPERATING ENGINEERS LOCAL 98*	12/01/2015	$31.83	$10.18	$11.74	$0.00	$53.75
For apprentice rates see "Apprentice- OPERATING ENGINEERS"						
SELF-PROPELLED POWER BROOM *OPERATING ENGINEERS LOCAL 98*	12/01/2015	$29.21	$10.18	$11.74	$0.00	$51.13
For apprentice rates see "Apprentice- OPERATING ENGINEERS"						
SHEETMETAL WORKER *SHEETMETAL WORKERS LOCAL 63*	01/01/2016	$31.57	$10.54	$14.86	$1.70	$58.67
	07/01/2016	$32.28	$10.54	$14.90	$1.70	$59.42
	01/01/2017	$33.03	$10.54	$14.90	$1.70	$60.17

Classification	Effective Date	Base Wage	Health	Pension	Supplemental Unemployment	Total Rate

Apprentice - *SHEET METAL WORKER - Local 63*

Effective Date - 01/01/2016

Step	percent	Apprentice Base Wage	Health	Pension	Supplemental Unemployment	Total Rate
1	45	$14.21	$6.21	$4.08	$0.00	$24.50
2	50	$15.79	$6.55	$4.53	$0.00	$26.87
3	55	$17.36	$6.89	$8.15	$0.97	$33.37
4	60	$18.94	$7.22	$8.15	$1.03	$35.34
5	65	$20.52	$7.55	$8.15	$1.09	$37.31
6	70	$22.10	$7.88	$8.15	$1.14	$39.27
7	75	$23.68	$8.22	$8.15	$1.20	$41.25
8	80	$25.26	$9.30	$13.95	$1.46	$49.97
9	85	$26.83	$9.64	$13.95	$1.51	$51.93
10	90	$28.41	$9.98	$13.95	$1.57	$53.91

Notes:

Apprentice to Journeyworker Ratio:1:3

SIGN ERECTOR *PAINTERS LOCAL 35 - ZONE 3*	06/01/2013	$25.81	$7.07	$7.05	$0.00	$39.93

Apprentice - *SIGN ERECTOR - Local 35 Zone 3*

Effective Date - 06/01/2013

Step	percent	Apprentice Base Wage	Health	Pension	Supplemental Unemployment	Total Rate
1	50	$12.91	$7.07	$0.00	$0.00	$19.98
2	55	$14.20	$7.07	$2.45	$0.00	$23.72
3	60	$15.49	$7.07	$2.45	$0.00	$25.01
4	65	$16.78	$7.07	$2.45	$0.00	$26.30
5	70	$18.07	$7.07	$7.05	$0.00	$32.19
6	75	$19.36	$7.07	$7.05	$0.00	$33.48
7	80	$20.65	$7.07	$7.05	$0.00	$34.77
8	85	$21.94	$7.07	$7.05	$0.00	$36.06
9	90	$23.23	$7.07	$7.05	$0.00	$37.35

Notes:

Steps are 4 mos.

Apprentice to Journeyworker Ratio:1:1

SPECIALIZED EARTH MOVING EQUIP < 35 TONS *TEAMSTERS JOINT COUNCIL NO. 10 ZONE B*	12/01/2015	$31.94	$10.41	$10.08	$0.00	$52.43
	06/01/2016	$32.44	$10.41	$10.08	$0.00	$52.93
	08/01/2016	$32.44	$10.91	$10.08	$0.00	$53.43
	12/01/2016	$32.44	$10.91	$10.89	$0.00	$54.24

Classification	Effective Date	Base Wage	Health	Pension	Supplemental Unemployment	Total Rate
SPECIALIZED EARTH MOVING EQUIP > 35 TONS *TEAMSTERS JOINT COUNCIL NO. 10 ZONE B*	12/01/2015	$32.23	$10.41	$10.08	$0.00	$52.72
	06/01/2016	$32.73	$10.41	$10.08	$0.00	$53.22
	08/01/2016	$32.73	$10.91	$10.08	$0.00	$53.72
	12/01/2016	$32.73	$10.91	$10.89	$0.00	$54.53
SPRINKLER FITTER *SPRINKLER FITTERS LOCAL 669*	01/01/2016	$38.01	$8.52	$12.13	$0.00	$58.66

Apprentice - *SPRINKLER FITTER - Local 669*

Effective Date - 01/01/2016

Step	percent	Apprentice Base Wage	Health	Pension	Supplemental Unemployment	Total Rate
1	45	$17.10	$7.45	$0.00	$0.00	$24.55
2	50	$19.01	$7.45	$0.00	$0.00	$26.46
3	55	$20.91	$8.52	$6.30	$0.00	$35.73
4	60	$22.81	$8.52	$6.30	$0.00	$37.63
5	65	$24.71	$8.52	$6.55	$0.00	$39.78
6	70	$26.61	$8.52	$6.55	$0.00	$41.68
7	75	$28.51	$8.52	$6.55	$0.00	$43.58
8	80	$30.41	$8.52	$6.55	$0.00	$45.48
9	85	$32.31	$8.52	$6.55	$0.00	$47.38
10	90	$34.21	$8.52	$6.55	$0.00	$49.28

Notes:

Apprentice to Journeyworker Ratio:1:1

TELECOMMUNICATION TECHNICIAN *ELECTRICIANS LOCAL 7*	01/03/2016	$38.41	$9.35	$10.10	$0.00	$57.86
	07/03/2016	$39.31	$9.35	$10.10	$0.00	$58.76
	01/01/2017	$40.21	$9.35	$10.10	$0.00	$59.66

Classification	Effective Date	Base Wage	Health	Pension	Supplemental Unemployment	Total Rate

Apprentice - *TELECOMMUNICATION TECHNICIAN - Local 7*

Effective Date - 01/03/2016

Step	percent	Apprentice Base Wage	Health	Pension	Supplemental Unemployment	Total Rate
1	40	$15.36	$5.00	$0.46	$0.00	$20.82
2	45	$17.28	$5.00	$0.52	$0.00	$22.80
3	50	$19.21	$9.35	$5.83	$0.00	$34.39
4	55	$21.13	$9.35	$5.88	$0.00	$36.36
5	65	$24.97	$9.35	$7.00	$0.00	$41.32
6	70	$26.89	$9.35	$8.06	$0.00	$44.30

Effective Date - 07/03/2016

Step	percent	Apprentice Base Wage	Health	Pension	Supplemental Unemployment	Total Rate
1	40	$15.72	$5.00	$0.47	$0.00	$21.19
2	45	$17.69	$5.00	$0.53	$0.00	$23.22
3	50	$19.66	$9.35	$5.84	$0.00	$34.85
4	55	$21.62	$9.35	$5.90	$0.00	$36.87
5	65	$25.55	$9.35	$7.02	$0.00	$41.92
6	70	$27.52	$9.35	$8.08	$0.00	$44.95

Notes:

Steps are 800 hours

Apprentice to Journeyworker Ratio:1:1

TERRAZZO FINISHERS *BRICKLAYERS LOCAL 3 (SPR/PITT) - MARBLE & TILE*	02/29/2016	$31.76	$10.18	$16.98	$0.00	$58.92
	09/05/2016	$32.67	$10.18	$17.05	$0.00	$59.90
	02/27/2017	$33.24	$10.18	$17.05	$0.00	$60.47

Classification	Effective Date	Base Wage	Health	Pension	Supplemental Unemployment	Total Rate

Apprentice - *MARBLE-TILE-TERRAZZO FINISHER-Local 3 Marble/Tile (Spr/Pitt)*

Effective Date - 02/29/2016

Step	percent	Apprentice Base Wage	Health	Pension	Supplemental Unemployment	Total Rate
1	50	$15.88	$10.18	$16.98	$0.00	$43.04
2	60	$19.06	$10.18	$16.98	$0.00	$46.22
3	70	$22.23	$10.18	$16.98	$0.00	$49.39
4	80	$25.41	$10.18	$16.98	$0.00	$52.57
5	90	$28.58	$10.18	$16.98	$0.00	$55.74

Effective Date - 09/05/2016

Step	percent	Apprentice Base Wage	Health	Pension	Supplemental Unemployment	Total Rate
1	50	$16.34	$10.18	$17.05	$0.00	$43.57
2	60	$19.60	$10.18	$17.05	$0.00	$46.83
3	70	$22.87	$10.18	$17.05	$0.00	$50.10
4	80	$26.14	$10.18	$17.05	$0.00	$53.37
5	90	$29.40	$10.18	$17.05	$0.00	$56.63

Notes:

Apprentice to Journeyworker Ratio:1:5

TEST BORING DRILLER *LABORERS - FOUNDATION AND MARINE*	12/01/2015	$36.70	$7.45	$13.75	$0.00	$57.90
	06/01/2016	$37.45	$7.45	$13.75	$0.00	$58.65
	12/01/2016	$38.45	$7.45	$13.75	$0.00	$59.65
For apprentice rates see "Apprentice- LABORER"						
TEST BORING DRILLER HELPER *LABORERS - FOUNDATION AND MARINE*	12/01/2015	$35.42	$7.45	$13.75	$0.00	$56.62
	06/01/2016	$36.17	$7.45	$13.75	$0.00	$57.37
	12/01/2016	$37.17	$7.45	$13.75	$0.00	$58.37
For apprentice rates see "Apprentice- LABORER"						
TEST BORING LABORER *LABORERS - FOUNDATION AND MARINE*	12/01/2015	$35.30	$7.45	$13.75	$0.00	$56.50
	06/01/2016	$36.05	$7.45	$13.75	$0.00	$57.25
	12/01/2016	$37.05	$7.45	$13.75	$0.00	$58.25
For apprentice rates see "Apprentice- LABORER"						
TRACTORS *OPERATING ENGINEERS LOCAL 98*	12/01/2015	$31.83	$10.18	$11.74	$0.00	$53.75
For apprentice rates see "Apprentice- OPERATING ENGINEERS"						
TRAILERS FOR EARTH MOVING EQUIPMENT *TEAMSTERS JOINT COUNCIL NO. 10 ZONE B*	12/01/2015	$32.52	$10.41	$10.08	$0.00	$53.01
	06/01/2016	$33.02	$10.41	$10.08	$0.00	$53.51
	08/01/2016	$33.02	$10.91	$10.08	$0.00	$54.01
	12/01/2016	$33.02	$10.91	$10.89	$0.00	$54.82
TUNNEL WORK - COMPRESSED AIR *LABORERS (COMPRESSED AIR)*	12/01/2015	$47.58	$7.45	$14.15	$0.00	$69.18
	06/01/2016	$48.33	$7.45	$14.15	$0.00	$69.93
	12/01/2016	$49.33	$7.45	$14.15	$0.00	$70.93
For apprentice rates see "Apprentice- LABORER"						

Classification	Effective Date	Base Wage	Health	Pension	Supplemental Unemployment	Total Rate
TUNNEL WORK - COMPRESSED AIR (HAZ. WASTE) *LABORERS (COMPRESSED AIR)*	12/01/2015	$49.58	$7.45	$14.15	$0.00	$71.18
	06/01/2016	$50.33	$7.45	$14.15	$0.00	$71.93
	12/01/2016	$51.33	$7.45	$14.15	$0.00	$72.93
For apprentice rates see "Apprentice- LABORER"						
TUNNEL WORK - FREE AIR *LABORERS (FREE AIR TUNNEL)*	12/01/2015	$39.65	$7.45	$14.15	$0.00	$61.25
	06/01/2016	$40.40	$7.45	$14.15	$0.00	$62.00
	12/01/2016	$41.40	$7.45	$14.15	$0.00	$63.00
For apprentice rates see "Apprentice- LABORER"						
TUNNEL WORK - FREE AIR (HAZ. WASTE) *LABORERS (FREE AIR TUNNEL)*	12/01/2015	$41.65	$7.45	$14.15	$0.00	$63.25
	06/01/2016	$42.40	$7.45	$14.15	$0.00	$64.00
	12/01/2016	$43.40	$7.45	$14.15	$0.00	$65.00
For apprentice rates see "Apprentice- LABORER"						
VAC-HAUL *TEAMSTERS JOINT COUNCIL NO. 10 ZONE B*	12/01/2015	$31.94	$10.41	$10.08	$0.00	$52.43
	06/01/2016	$32.44	$10.41	$10.08	$0.00	$52.93
	08/01/2016	$32.44	$10.91	$10.08	$0.00	$53.43
	12/01/2016	$32.44	$10.91	$10.89	$0.00	$54.24
WAGON DRILL OPERATOR *LABORERS - ZONE 3 (BUILDING & SITE)*	12/07/2015	$29.25	$7.45	$11.86	$0.00	$48.56
	06/06/2016	$29.94	$7.45	$11.86	$0.00	$49.25
	12/05/2016	$30.62	$7.45	$11.86	$0.00	$49.93
For apprentice rates see "Apprentice- LABORER"						
WAGON DRILL OPERATOR (HEAVY & HIGHWAY) *LABORERS - ZONE 3 (HEAVY & HIGHWAY)*	12/01/2015	$28.99	$7.45	$10.28	$0.00	$46.72
	06/01/2016	$29.49	$7.45	$10.28	$0.00	$47.22
	12/01/2016	$30.24	$7.45	$10.28	$0.00	$47.97
For apprentice rates see "Apprentice- LABORER (Heavy and Highway)						
WATER METER INSTALLER *PLUMBERS & PIPEFITTERS LOCAL 104*	03/17/2016	$38.26	$8.45	$15.05	$0.00	$61.76
For apprentice rates see "Apprentice- PLUMBER/PIPEFITTER" or "PLUMBER/GASFITTER"						
Outside Electrical - West						
EQUIPMENT OPERATOR *OUTSIDE ELECTRICAL WORKERS - WEST LOCAL 42*	08/30/2015	$42.16	$8.20	$9.26	$0.00	$59.62
For apprentice rates see "Apprentice- LINEMAN"						
GROUNDMAN *OUTSIDE ELECTRICAL WORKERS - WEST LOCAL 42*	08/30/2015	$28.87	$8.20	$8.87	$0.00	$45.94
For apprentice rates see "Apprentice- LINEMAN"						
GROUNDMAN / TRUCK DRIVER *OUTSIDE ELECTRICAL WORKERS - WEST LOCAL 42*	08/30/2015	$37.73	$8.20	$9.13	$0.00	$55.06
For apprentice rates see "Apprentice- LINEMAN"						
HEAVY EQUIPMENT OPERATOR *OUTSIDE ELECTRICAL WORKERS - WEST LOCAL 42*	08/30/2015	$44.37	$8.20	$9.33	$0.00	$61.90
For apprentice rates see "Apprentice- LINEMAN"						
JOURNEYMAN LINEMAN *OUTSIDE ELECTRICAL WORKERS - WEST LOCAL 42*	08/30/2015	$48.80	$8.20	$9.46	$0.00	$66.46

Classification	Effective Date	Base Wage	Health	Pension	Supplemental Unemployment	Total Rate

Apprentice - *LINEMAN (Outside Electrical) - West Local 42*

Effective Date - 08/30/2015

Step	percent	Apprentice Base Wage	Health	Pension	Supplemental Unemployment	Total Rate
1	60	$29.28	$8.20	$0.88	$0.00	$38.36
2	65	$31.72	$8.20	$0.95	$0.00	$40.87
3	70	$34.16	$8.20	$9.02	$0.00	$51.38
4	75	$36.60	$8.20	$9.10	$0.00	$53.90
5	80	$39.04	$8.20	$9.17	$0.00	$56.41
6	85	$41.48	$8.20	$9.24	$0.00	$58.92
7	90	$43.92	$8.20	$9.32	$0.00	$61.44

Notes:

Apprentice to Journeyworker Ratio:1:2

TELEDATA CABLE SPLICER *OUTSIDE ELECTRICAL WORKERS - WEST LOCAL 42*	01/01/2016	$28.98	$4.25	$3.12	$0.00	$36.35
TELEDATA LINEMAN/EQUIPMENT OPERATOR *OUTSIDE ELECTRICAL WORKERS - WEST LOCAL 42*	01/01/2016	$27.31	$4.25	$3.07	$0.00	$34.63
TELEDATA WIREMAN/INSTALLER/TECHNICIAN *OUTSIDE ELECTRICAL WORKERS - WEST LOCAL 42*	01/01/2016	$27.31	$4.25	$3.07	$0.00	$34.63
TRACTOR-TRAILER DRIVER *OUTSIDE ELECTRICAL WORKERS - WEST LOCAL 42*	08/30/2015	$42.16	$8.20	$9.26	$0.00	$59.62
TREE TRIMMER *OUTSIDE ELECTRICAL WORKERS - WEST LOCAL 42*	01/31/2016	$18.51	$3.55	$0.00	$0.00	$22.06

This classification applies only to tree work done: (a) for a utility company, R.E.A. cooperative, or railroad or coal mining company, and (b) for the purpose of operating, maintaining, or repairing the utility company's equipment, and (c) by a person who is using hand or mechanical cutting methods and is not on the ground. This classification does not apply to wholesale tree removal.

TREE TRIMMER GROUNDMAN *OUTSIDE ELECTRICAL WORKERS - WEST LOCAL 42*	01/31/2016	$16.32	$3.55	$0.00	$0.00	$19.87

This classification applies only to tree work done: (a) for a utility company, R.E.A. cooperative, or railroad or coal mining company, and (b) for the purpose of operating, maintaining, or repairing the utility company's equipment, and (c) by a person who is using hand or mechanical cutting methods and is on the ground. This classification does not apply to wholesale tree removal.

Additional Apprentice Information:

Minimum wage rates for apprentices employed on public works projects are listed above as a percentage of the pre-determined hourly wage rate established by the Commissioner under the provisions of the M.G.L. c. 149, ss. 26-27D. Apprentice ratios are established by the Division of Apprenticeship Training pursuant to M.G.L. c. 23, ss. 11E-11L.

All apprentices must be registered with the Division of Apprenticeship Training in accordance with M.G.L. c. 23, ss. 11E-11L.

All steps are six months (1000 hours.)
Ratios are expressed in allowable number of apprentices to journeymen or fraction thereof, unless otherwise specified.

** Multiple ratios are listed in the comment field.
*** APP to JM; 1:1, 2:2, 2:3, 3:4, 4:4, 4:5, 4:6, 5:7, 6:7, 6:8, 6:9, 7:10, 8:10, 8:11, 8:12, 9:13, 10:13, 10:14, etc.
**** APP to JM; 1:1, 1:2, 2:3, 2:4, 3:5, 4:6, 4:7, 5:8, 6:9, 6:10, 7:11, 8:12, 8:13, 9:14, 10:15, 10:16, etc.

SECTION 01100

LABOR REGULATIONS

1. MINIMUM MINORITY PERCENTAGES

A. The following minimum minority percentages are applicable as per Article 14 of the General Conditions.

Location		**Not Less than**
Boston	Impact Area Jamaica Plain (part), Mattapan, South Cove, Chinatown, Bay Village, Roxbury, Dorchester, South End):	30%
Boston:	Other Areas:	10%
Cambridge:		12%
New Bedford:		18%
Springfield:		10%
All other cities and towns:		5%

B. These percentages shall apply to the Contractor and to all Subcontractors, regardless of tier, for all on-site Work.

2. WAGE RATES

A. The rate per hour to be paid to mechanics, apprentices, teamsters, chauffeurs, and laborers employed on the Work shall not be less than the rate of wages in the attached "Minimum Wage Rates" as determined by the Director of the Department of Labor and Work Force Development. This schedule shall continue to be the minimum rate of wages for said employees during the life of this Contract. Any questions relative to the applicability of any wage rate shall be directed to the Department of Labor and Workforce Development.

B. Keep posted on the site a legible copy of said schedule. Provide the Owner, on a weekly basis, and keep an on-site file of the wage rates and classifications of labor employed on this Work in order that they may be available for inspection by the Owner, Department, Architect, or any other agency having jurisdiction. .

C. Apprentices employed pursuant to this determination of wage rates must be registered and approved by the State Apprenticeship Council wherever rates for journeymen or apprentices are not listed.

D. Pay reserve police officers employed on the Work the prevailing rate of wages paid to regular police officers as required by MGL c149 § 34B, as amended. Such police officers shall be covered by Worker's Compensation Insurance and Employers Liability Insurance by the Contractor.

E. The Contractor and all subcontractors shall provide certified payroll affidavits verifying compliance with MGL c.149 §§26 - 27H.

F. The Contractor and all subcontractors shall provide a Statement of Compliance within 15 days of the completion of its portion of the work. This statement shall be submitted to the Owner on the form found elsewhere in this section.

G. The Contractor and all its subcontractors shall furnish to the Owner, with the first certified payroll report, documentation indicating that each employee has successfully completed 10 hours of a course in construction safety and health. This course must be approved by the United States Occupational Health and Safety Administration (OSHA

(Insert Wage Rates obtained from Department of Labor and Workforce Development)

END OF SECTION

SECTION 01300

SUBMITTALS - SHOP DRAWINGS, PRODUCT DATA, AND SAMPLES

1. RELATED DOCUMENTS

A. This Section supplements Subparagraphs 3.15 and4.3.5 and Paragraphs 3.7, 3.8, and 3.15 of the General Conditions.

B. Consult the individual sections of the specifications for the specific submittals required under those sections and for further details and descriptions of the requirements.

2. GENERAL PROCEDURES FOR SUBMITTALS

A. **Timeliness** - The Contractor shall transmit each submittal to the Architect sufficiently in advance of performing related Work or other applicable activities so that the installation is not delayed by processing times, including disapproval and resubmittal (if required), coordination with other submittals, testing, purchasing, fabrication, delivery, and similar sequenced activities. No extension of time will be authorized because of the Contractor's failure to transmit submittals to the Architect in advance of the Work.

B. **Sequence** - The Contractor shall transmit each submittal in a sequence which will not result in the Architect's approval having to be later modified or rescinded by reason of subsequent submittals which should have been processed earlier or concurrently for coordination.

C. **Contractor's Review and Approval** - Only submittals received from and bearing the stamp of approval of the Contractor will be considered for review by the Architect. Submittals shall be accompanied by a transmittal notice stating name of Project, date of submittal, "To", "From" (Contractor, Subcontractor, Installer, Manufacturer, Supplier), Specification Section, or Drawing No. to which the submittal refers, purpose (first submittal, resubmittal), description, remarks, distribution record, and signature of transmitter.

D. **Architect's Action** - The Architect will review the Contractor's submittals and return them with one of the following actions recorded thereon by appropriate markings:

(1.) **Final Unrestricted Release:** Where marked "No Exceptions taken" the Work covered by the submittal may proceed provided it complies with the requirements of the Contract Documents.

(2.) **Final-But-Restricted Release:** When marked "Furnish as Corrected" the Work may proceed provided it complies with the Architect's notations or corrections on the submittal and complies with the requirements of the Contract Documents. Acceptance of the Work will depend on these compliances.

(3.) **Returned for Resubmittal:** When marked "Revise and Resubmit" or "Disapproved" the Work covered by the submittal (such as purchasing, fabrication, delivery, or other activity) should not proceed. The submittal should be revised or a new submittal resubmitted without delay, in accordance with the Architect's notations stating the reasons for returning the submittal.

E. **Processing** - All costs for printing, preparing, packaging, submitting, resubmitting, and mailing, or delivering submittals required by this contract shall be included in the Contract Sum.

3. OR EQUALS

A. **Definition** - Whenever a specification section names one or more brands for a given item, and the Contractor wishes to submit, for consideration, another brand, the submission shall be considered an "or-equal" or a "material substitution". For the purposes of this Contract, the terms "or-equal" and "material substitution" shall be considered synonymous.

B. In no case may an item be furnished on the Work other than the item named or described, unless the Architect, with the Administrator's written concurrence, shall consider the item equal to the Item so named or described, as provided by M.G.L. c.30 § 39M.

C. The equality of items offered as "equal" to items named or described shall be proved to the satisfaction of

the Architect at the expense of the Contractor submitting the substitution.

D. The Architect or Owner may require that full size samples of both the specified and proposed products be submitted for review and evaluation. The Contractor shall bear full cost for providing, delivering, and disposal of all such samples.

E. The Contractor shall assume full responsibility for the performance of any item submitted as an "Or-Equal" and assume the costs of any changes in any Work which may be caused by such substitution.

F. **Or Equal Approval Process -** On the transmittal, or on a separate sheet attached to the submission, the Contractor shall direct attention to any deviations, including minor limitations and variations, from the Contract Documents.

(1.) The Contractor shall submit to the Architect for consideration of any or-equal substitution a written point-by-point comparison containing the name and full particulars of the proposed product and the product named or described in the Contract Documents.

(2.) Such submittal shall in no event be made later than 120 calendar days prior to the incorporation of the item into the Work. In any case in which the time period specified in the Contract Documents from the Notice to Proceed to Substantial Completion is less than 120 days, this requirement can be waived by the Architect.

(3.) Upon receipt of a written request for approval of an or-equal substitution, the Architect shall investigate whether the proposed item shall be considered equal to the item named or described in the Contract Documents. Upon conclusion of the investigation, the Architect shall promptly advise the Contractor that the item is, or is not, considered acceptable as on Or-Equal substitution. Such written notice must have the concurrence of the Administrator.

4. SUBMISSION OF SHOP DRAWINGS

A. Shop Drawings shall be complete, giving all information necessary or requested in the individual section of the specifications. They shall also show adjoining Work and details of connection thereto.

B. Shop Drawings shall be for whole systems. Partial submissions will not be accepted.

C. The Architect reserves the right to review and approve shop drawings only after approval of related product data and samples.

D. Shop drawings shall be properly identified and contain the name of the project, name of the firm submitting the shop drawings, shop drawing number, date of shop drawings and revisions, Contractor's stamp of approval, and sufficient spaces near the title block for the Architect's stamp.

E. The Contractor shall submit to the Architect one legible, reproducible transparency and two black line prints of each shop drawing. Transparency and prints shall be mailed or delivered in roll form. Each submittal shall be accompanied by a transmittal notice.

F. When the transparency is returned by the Architect with the stamp "Revise and Resubmit" or "Disapproved", the Contractor shall correct the original drawing or prepare a new drawing and resubmit a transparency and two prints thereof to the Architect for approval. This procedure shall be repeated until the Architect's approval is obtained.

G. When the transparency is returned by the Architect with the stamp "Approved" or "Approved as Corrected", the Contractor shall provide and distribute the prints for all Contractor and Subcontractors use, and in addition submit, within 10 calendar days after approval, 4 prints to the Architect.

H. The Contractor shall maintain one full set of approved shop drawings at the site.

5. SUBMISSION OF PRODUCT DATA

A. The Contractor shall submit 7 copies of Product Data to the Architect. All such data shall be specific and identification of material or equipment submitted shall be clearly marked in ink. Data of general nature will not be accepted.

B. Product Data shall be accompanied by a transmittal notice. The Contractor's stamp of approval shall appear on the printed information itself, in a location which will not impair legibility.

C. Product Data returned by the Architect as "Disapproved" shall be resubmitted in 7 copies until the Architects approval is obtained.

D. When the Product Data are acceptable, the Architect will stamp them "Approved" or "Approved as Corrected", retain 3 copies, and return 4 copies to the Contractor. The Contractor shall provide and distribute additional copies as may be required to complete the Work.

E. The Contractor shall maintain one full set of approved, original, Product Data at the site.

6. SUBMISSION OF SAMPLES

A. Unless otherwise specified in the individual section, the Contractor shall submit two specimens of each sample.

B. Samples shall be of adequate size to permit proper evaluation of materials. Where variations in color or in other characteristics are to be expected, samples shall show the maximum range of variation. Materials exceeding the variation of approved samples will not be approved on the Work.

C. Samples of items of interior finishes shall be submitted all at once to permit a coordinated selection of colors and finishes.

D. Samples which can be conveniently mailed shall be sent directly to the Architect, accompanied by a transmittal notice. All transmittals shall be stamped with the Contractor's approval stamp of the material submitted.

E. All other samples shall be delivered at the field office of the Project Representative with sample identification tag attached and properly filled in. Transmittal notice of samples so delivered with the Contractor's stamp of approval shall be mailed to the Architect.

F. If a sample is rejected by the Architect, a new sample shall be resubmitted in the manner specified hereinabove. This procedure shall be repeated until the sample is approved by the Architect.

G. Samples will not be returned unless return is requested at the time of submission. The right is reserved to require submission of samples whether or not particular mention is made in the specifications, at no additional cost to the Owner.

END OF SECTION

SECTION 01500

TEMPORARY FACILITIES

1. GENERAL REQUIREMENTS

A. The Contractor shall be responsible for providing and maintaining all temporary facilities until Substantial Completion. Removal of such prior to Substantial Completion must be with the concurrence of the Architect. The Contractor bears full responsibility for re providing any facility removed prior to Substantial Completion

B. Removal of all temporary facilities shall be a condition precedent to Substantial Completion unless directed otherwise by the Architect or specifically noted in the specifications.

C. The Contractor must comply with all safety laws and regulations of the Commonwealth of Massachusetts, the United States Government, and local government agencies applicable to Work under this contract. The Contractor's attention is directed to the Commonwealth of Massachusetts, Department of Labor and Industries Regulation 454 CMR.

2. ~~FIELD OFFICES~~

~~**A.** The Contractor shall provide a suitable office at the site for use by Contractor personnel.~~

~~**B.** The office shall be set in a location approved by the Architect, and shall be maintained by the Contractor in a clean and orderly condition.~~

3. TEMPORARY TELEPHONES

A. The Contractor shall provide and pay for telephone service for the use of the Contractor's authorized personnel and Subcontractors.

B. The Contractor shall pay for the installation and removal of the foregoing temporary telephones and for all calls and charges in connection therewith.

4. TEMPORARY TOILETS

A. The Contractor shall provide and service an adequate number of toilet booths with chemical type toilets.

B. The toilets shall be erected in a location approved by the Architect and shall be maintained by the Contractor in a clean and orderly condition in compliance with all local and state health requirements.

5. TEMPORARY CONSTRUCTION FENCE

A. The Contractor shall be responsible for providing and maintaining temporary fencing or barricades around the construction as may be necessary to assure the safety of all persons authorized or unauthorized. Such protective measures shall be located and constructed as required by local, state, and federal ordinances, laws, codes, or regulations.

6. TEMPORARY STRUCTURES AND MATERIAL HANDLING

A. The Contractor shall provide such storage sheds, temporary buildings, or trailers as required for the performance of the Contract. Subcontractors shall provide their own temporary buildings and trailers**.**

B. Materials shall be handled, stored, installed, cleaned, and protected in accordance with the best practice in the industry and, except where otherwise specified in the Contract Documents, in accordance with manufacturer's specifications and directions.

C. The Contractor must obtain the permission of the Owner for the use of any storage facilities available on site, but the Owner assumes no responsibility for articles stored.

8. HOISTING FACILITIES

A. Except as otherwise specified, the Contractor shall provide, operate, and remove material hoists, cranes, and other hoisting as required for the performance of the Work by all trades. All such hoisting service shall be without cost to the Subcontractors.

10. TEMPORARY WATER

A. The Contractor may make use of the available water supply at the site for construction purposes, provided the permission of the Owner is obtained beforehand and only as long as the water is not used wastefully.

B. The Contractor shall provide all necessary piping and hoses to utilize the available sources of water.

C. The Contractor shall provide an adequate supply of cool drinking water with individual drinking cups for personnel on the job**.**

11. TEMPORARY ELECTRICITY

A. The Contractor may make use of the electricity available at the site, metered and paid for by the Owner, provided that the Contractor shall supply proper adapters and extension cords**.**

12. WEATHER PROTECTION

A. The Contractor shall provide temporary enclosures and heat to permit work to be carried on during the months of November through March in compliance with MGL c.149 §44G (d). These specifications are not to be construed as requiring enclosures or heat for operations that are not economically feasible in the opinion of the Owner. Without limitation this includes such items as excavation, pile driving, steel erection, erection of certain exterior wall panels, roofing**,** and similar operations.

B. "Weather Protection" means the temporary protection of that Work adversely affected by moisture, wind, and cold by covering, enclosing, and/or heating. This protection shall provide adequate working areas during the months of November through March as determined by the Owner and consistent with the construction schedule to permit the continuous progress of all Work necessary to maintain an orderly and efficient sequence of construction operations. The Contractor shall furnish and install "Weather Protection" material and be responsible for all costs, including heating required to maintain a minimum of 40 degrees F. at the working surface. This provision does not supersede any specific requirements for methods of construction, curing of materials, or the applicable conditions set forth in the Contract Documents with added regard to performance obligations of the Contractor.

C. Within 30 calendar days after award of the Contract, the Contractor shall submit in writing, to the Architect for approval, three (3) copies of the proposed methods for "Weather Protection".

D. The Contractor shall assume the entire responsibility for weather protection during construction (until Substantial Completion), and shall be liable for any damage to any Work caused by failure to supply proper weather protection and proper ventilation.

E. Work damaged by frost shall be removed and replaced by and at the Contractor's expense and as directed by the Architect.

F. It is to be specifically understood that the Contractor shall do no work under any conditions deemed unsuitable by the Contractor to the execution of the Work. This provision shall not constitute any waiver, release, or lessening of the Contractor's obligation to bring the Work to Substantial Completion within the period of time set forth in the Contract Documents**.**

12. TEMPORARY HEAT

A. The Contractor shall provide a minimum temperature of 70 degrees Fahrenheit to all occupied areas of the Project. If the permanent heating system cannot be utilized or if work requires a shutdown of the existing system the Contractor shall make arrangements, acceptable to the Owner, to comply with this requirement.

END OF SECTION

SECTION 01510

PROTECTION

1. PROTECTION OF PERSONS & PROPERTIES

A. The building will not be occupied during construction.

B. Any damage to buildings, roads, (public and private), bituminous concrete areas, fences, lawn areas, trees, shrubbery, poles, underground utilities, etc. shall be made good by and at the Contractor's own expense, all to the satisfaction of the Owner.

C. The Contractor shall patch, repair and/or replace all adjacent materials and surfaces damaged after the installation of new work at no expense to the Owner. All repair and replacement work shall match the existing in kind and appearance.

2. TEMPORARY PROTECTION

A. The Contractor shall:

(1.) Protect excavations, trenches, buildings, and materials at all times from rain water, ground water, backing-up, or leakage of sewers, drains, or other piping, or from water damage of any origin. Provide all pumps, piping, coverings, and other materials and equipment as required by job conditions to accomplish this requirement.

(2.) In addition to the weather protection during the months of November to March specified elsewhere, provide temporary watertight enclosures for openings in exterior walls and in roof decks when and as required to protect the Work from damage by inclement weather. Temporary enclosures shall be provided with adequate means of ventilation to prevent accumulation of moisture in the buildings.

(3.) Provide temporary wood doors for exterior entrances and elsewhere as required. Permanent door enclosures shall not be used as temporary enclosures.

(4.) Protect sills, jambs, and heads of openings through which materials are handled.

(5.) Protect decks and slabs to receive work by other trades from any soiling which will prevent proper adhesion of subsequent Work. Decks and slabs shall be left clean and free of blemishes at the time other trades begin the application of their work.

(6.) Protect concrete slabs to remain exposed and finished floors against mechanical damage plaster droppings, oil, grease, paint, or other material, which will stain the floor finish. Install and maintain adequate strips of building paper or other protection on finished floors in rooms where future Work will be done by other trades.

(7.) Protect all surfaces to receive work by other trades from any soiling which will prevent proper execution of subsequent work

(8.) Protect other areas, furniture, and private property of the Owner. Any areas damaged by the Contractor shall be restored to the original condition or compensated at the Contractor's expense.

B. Roof surfaces and waterproofed surfaces shall not be subjected to traffic nor shall they be used

for storage of materials. Where some activity must take place in order to carry out the Work, adequate protection must be provided.

C. After the installation of the Work by any Subcontractor is completed, the Contractor shall be responsible for its protection and for repairing, replacing, or cleaning any such Work which has been damaged by other trades or by any other cause, so that all Work is in first class condition at the time of Substantial Completion.

3. ACCESS

A. The Contractor shall, at all times, leave an unobstructed way along walks and roadways, and shall maintain barriers and lights for the protection of all persons and property in all locations where materials are stored or work is in progress.

4. SECURITY

A. The Contractor shall be responsible for providing all security precautions necessary to protect the Contractor's and Owner's interests.

B. Where excavation is involved, the Contractor shall be responsible for providing continuous watchmen service as necessary, to insure adequate protection of the general public.

5. NOISE AND DUST CONTROL

A. The Contractor shall take special measures to protect the residents, neighbors, and general public from noise, dust, and other disturbances by:

(l.) Keeping common pedestrian and vehicular circulation areas clean and unobstructed;

(2.) Insulating work area from occupied portions as far as possible; and

(3.) Sealing dust and fumes from contaminating occupied spaces.

6. FIRE PROTECTION

A. The Contractor shall take necessary precautions to insure against fire during construction. The Contractor shall be responsible to insure that the area within contract limits is kept orderly and clean and that combustible rubbish and construction debris is promptly removed from the site.

B. Installation of equipment suitable for fire protection shall be done as soon as possible after commencement of the Work. The Contractor's attention is directed to the requirements of the Commonwealth of Massachusetts, Department of Labor and Workforce Development Regulation 454 CMR.

7. WIND PROTECTION

A. Should high wind warnings be issued by the U.S. Weather Bureau, the Contractor shall take every precaution to minimize danger to persons, to the Work, and to the adjacent property.

8. WEATHER PROTECTION

A. The Contractor shall provide Weather Protection as required by Specification Section 01500 Temporary Facilities and any other specific requirements of the Contract Documents.

END OF SECTION

SECTION 01520

CLEANING UP

1. RELATED DOCUMENTS

A. This section supplements Article 3.17 of the General Conditions.

B. Consult the individual sections of the specifications for cleaning of Work installed under those sections.

2. CLEANING DURING CONSTRUCTION

A. Conduct cleaning and disposal operations to comply with local ordinances and anti-pollution laws.

1. Do not burn or bury rubbish and waste materials on the site.

2. Do not dispose of volatile wastes such as mineral spirits, oil, or paint thinner in storm or sanitary drains.

3. Do not dispose of wastes into streams or waterways.

B. Wet down dry materials and rubbish to lay dust and prevent blowing dust.

C. Maintain the Site free from accumulations of waste, debris, and rubbish.

D. Provide on-site containers for collection of waste materials and rubbish.

E. At the end of each day, remove and legally dispose waste materials and rubbish from site.

F. Vacuum clean interior building areas when ready to receive finish painting, and continue vacuum cleaning on an as-needed basis until Substantial Completion.

G. Schedule cleaning operations so that dust and other contaminants resulting from cleaning process will not fall on wet, newly painted surfaces.

H. Disposal of materials shall be in compliance with all applicable laws, ordinances, codes, and by-laws.

3. FINAL CLEANING

A. Prior to submitting a request to the Architect to certify Substantial Completion of the Work, the Contractor shall inspect all interior and exterior spaces and verify that all waste materials, rubbish, tools, equipment, machinery, and surplus materials have been removed, and that all sight-exposed surfaces are clean.

B. Unless otherwise specified under other sections of the Specifications, the Contractor shall perform final cleaning operations as herein specified prior to final inspection.

C. Cleaning shall include all surfaces, interior and exterior, which the Contractor has had access to, whether new or existing.

D. Employ experienced workmen or professional cleaners for final cleaning.

E. Use only cleaning materials recommended by the manufacturer of the surface to be cleaned.

F. Use cleaning materials which will not create a hazard to health or property and which will not damage surfaces.

G. All broken or defective glass caused by the Contractor's Work shall be replaced at the expense of the Contractor.

H. Remove grease, mastic, adhesive, dust, dirt, stains, labels, fingerprints, and other foreign materials from sight-exposed interior and exterior surfaces. This includes cleaning of the Work of all finishing trades where needed, whether or not cleaning by such trades is included in their respective specifications.

I. Clean and polish all new and existing glass and plastic glazing (if any) throughout the building(s), on both sides. Clean plastic glazing in accordance with the manufacturer's directions. This cleaning shall be completed by qualified window cleaners at the expense of the Contractor just prior to acceptance of the Work.

J. Wash and polish all mirrors.

K. Repair, patch, and touch up marred surfaces to the specified finish, to match adjacent surfaces.

L. Polish glossy surfaces to a clear shine.

M. Do the final cleaning of resilient floors and wood floors as specified under the respective sections of the Specifications.

N. Leave all architectural metals, hardware, and fixtures in undamaged, polished conditions.

O. Leave pipe and duct spaces, plenums, furred spaces and the like clean of debris and decayable materials.

P. In cleaning items with manufacturer's finish or items previously finished by a Subcontractor, care shall be taken not to damage such manufacturer's or Subcontractor's finish. In cleaning glass and finish surfaces, care shall be taken not to use detergents or other cleaning agents which may stain adjoining finish surfaces. Any damage to finishes caused by cleaning operations shall be repaired at the Contractor's expense.

Q. Broom clean exposed concrete surfaces and paved surfaces. Rake clean other surfaces of grounds.

R. Ventilating systems - Replace filters and clean ducts, blowers, and coils if units were operated during construction.

S. Owner's responsibility for cleaning commences at Substantial Completion.

END OF SECTION

SECTION 01700

PROJECT CLOSEOUT

1. RELATED DOCUMENTS

A. This section supplements the General Conditions.

B. Consult the individual sections of the specifications for specific items required under those sections.

3. SUBSTANTIAL COMPLETION

A. Prior to requesting Substantial Completion as provided in Article 3.0 of the General Conditions the Contractor shall make a thorough inspection of the Work. During this inspection the Contractor shall prepare a comprehensive list of all items remaining to be completed or corrected. This list shall include all remaining Contractor and Subcontractor items to be provided under the Contract Documents.

B. Upon completion of the items noted on the Contractor's list the Contractor shall notify the Architect that the Work is Substantially Complete. The Architect shall then conduct a similar thorough inspection. If the Architect agrees that the Work is Substantially Complete, the Architect will promptly make a thorough inspection and prepare a punch list, setting forth in accurate detail any items on the Contractor's list and additional items that are not acceptable or incomplete. The Contractor shall coordinate all Subcontractors to achieve prompt completion of the punch list.

C. The Contractor shall not be relieved of the responsibility to provide Contract items left off of the Architect's punch list.

D. If the Architect determines that the Work is not Substantially Complete, the Architect shall inform the Contractor of those items that must be completed before the Architect will prepare a punch list. Upon completion of those items, the Contractor shall again request the Architect to prepare a punch list.

E. When the punch list has been prepared, the Architect will arrange a meeting with the Contractor and Subcontractors to identify and explain all punch list items and answer questions on work which must be done before final acceptance.

F. The Architect may revise the punch list, from time to time, to ensure that all items of Work are properly completed.

G. The Architect shall prepare the Certificate of Substantial Completion in accordance with Article 3.0 of the General Conditions.

6. FINAL COMPLETION

A. RELATED REQUIREMENTS

The Contractor's attention is directed to Article 5.0 of the General Conditions.

B. FULL RELEASE OF RETAINAGE

1. Upon completion of all work, and after receipt of all appropriate marked up As Built Drawings, Operating Manuals, Warranties, Guarantees, and Spare Parts required by the Contract Documents, the Architect shall prepare the Certificate of Final Completion.

2. The Contractor’s signature on this Certificate shall be notarized.

3. The Contractor shall provide a final Application for Payment to complement the close-out process.

C. PARTIAL RELEASE OF RETAINAGE

1. If within 65 days after Substantial Completion, any of the items on the Architect's punch list are not complete or if the Contractor has not provided the appropriate marked up As Built Drawings, Operating Manuals, Warranties, Guarantees, or Spare Parts the Architect shall assign a monetary value for each incomplete item as well as any other items as provided by M.G.L. c.30 §39K, and the Architect shall prepare a Certificate for Partial Release of Retainage

2. If the Architect is required to prepare a Certificate for Partial Release of Retainage the Contractor shall complete all remaining Work in accordance with the provisions of Article 3.0 of the General Conditions.

3. The Contractor’s signature on this Certificate shall be notarized.

4. The Contractor may make a request for additional releases of retainage when portions of the Work listed on the Architect's punch list have been satisfactorily completed. Each request shall be accompanied by a new application for payment and a new signed and notarized Certificate for Partial Release of Retainage.

5. The Architect’s inspections, required to complete the additional payment applications described in subparagraph C4 above, are subject to provisions of subparagraph 9.7.5 of the General Conditions.

6. Upon completion of all remaining items, the Final Release of Retainage shall be processed in accordance with paragraph B above.

END OF SECTION

SECTION 01732 - SELECTIVE DEMOLITION

PART 1 - GENERAL

1.1 RELATED DOCUMENTS

A. Drawings and general provisions of the Contract, including General and Supplementary Conditions and other Division 1 Specification Sections, apply to this Section.

1.2 SUMMARY

A. This Section includes the following:

1. Demolition and removal of selected portions of a building or structure.
   a. Removal of existing doors and frames
   b. Removal of portions of masonry walls.
   c. Removal of portions of existing ceilings
   d. Removal of existing counters and cabinets.
2. Repair procedures for selective demolition operations.

B. Related Sections include the following:

1. Division 1 Section "Summary" for use of the premises and phasing requirements.
2. Division 1 Section "Work Restrictions" for restrictions on use of the premises due to Owner or tenant occupancy.
3. Division 1 Section "Temporary Facilities and Controls" for temporary construction and environmental-protection measures for selective demolition operations.
4. Division 1 Section "Cutting and Patching" for cutting and patching procedures for selective demolition operations.
5. Division 15 Sections for demolishing, cutting, patching, or relocating mechanical items.
6. Division 16 Sections for demolishing, cutting, patching, or relocating electrical items.

1.3 DEFINITIONS

A. Remove: Detach items from existing construction and legally dispose of them off-site, unless indicated to be removed and salvaged or removed and reinstalled.

B. Remove and Salvage: Detach items from existing construction and deliver them to Owner.

C. Remove and Reinstall: Detach items from existing construction, prepare them for reuse, and reinstall them where indicated.

D. Existing to Remain: Existing items of construction that are not to be removed and that are not otherwise indicated to be removed, removed and salvaged, or removed and reinstalled.

1.4 MATERIALS OWNERSHIP

A. Except for items or materials indicated to be reused, salvaged, reinstalled, or otherwise indicated to remain Owner's property, demolished materials shall become Contractor's property and shall be removed from Project site.

1.5 SUBMITTALS

A. Proposed Dust-Control and Noise-Control Measures: Submit statement or drawing that indicates the measures proposed for use, proposed locations, and proposed time frame for their operation. Identify options if proposed measures are later determined to be inadequate.

B. Schedule of Selective Demolition Activities: Indicate the following:

1. Detailed sequence of selective demolition and removal work, with starting and ending dates for each activity. Ensure Owner's and other tenants' on-site operations are uninterrupted.
2. Interruption of utility services.
3. Coordination for shutoff, capping, and continuation of utility services.
4. Use of elevator and stairs.
5. Locations of temporary partitions and means of egress, including for other tenants affected by selective demolition operations.
6. Compliance with Historic Preservation Standards for demolition work.

1.6 QUALITY ASSURANCE

A. Regulatory Requirements: Comply with governing EPA notification regulations before beginning selective demolition. Comply with hauling and disposal regulations of authorities having jurisdiction.

B. Standards: Comply with ANSI A10.6 and NFPA 241.

C. Predemolition Conference: Conduct conference at Project site to comply with requirements in Division 1 Section "Project Management and Coordination."

1. Inspect and discuss condition of construction to be selectively demolished.
2. Review structural load limitations of existing structure.
3. Review and finalize selective demolition schedule and verify availability of materials, demolition personnel, equipment, and facilities needed to make progress and avoid delays.
4. Review requirements of work performed by other trades that rely on substrates exposed by selective demolition operations.
5. Review requirements of Preservation Standards with the architect for removal of Historically significant materials.

1.7 PROJECT CONDITIONS

A. Owner will continue to store items on the premises which must be protected from damage during construction activities.

B. Maintain access to existing walkways, corridors, and other adjacent occupied or used facilities.

C. Owner assumes no responsibility for condition of areas to be selectively demolished.

1. Conditions existing at time of inspection for bidding purpose will be maintained by Owner as far as practical.
2. Hazardous Materials: A hazardous materials assessment report is available for review by the contractor.

D. Utility Service: Maintain existing utilities indicated to remain in service and protect them against damage during selective demolition operations.

PART 2 - PRODUCTS

2.1 REPAIR MATERIALS

A. Use repair materials identical to existing materials.

B. Comply with material and installation requirements specified in individual Specification Sections.

PART 3 - EXECUTION

3.1 EXAMINATION

A. Verify that utilities have been disconnected and capped.

B. Survey existing conditions and correlate with requirements indicated to determine extent of selective demolition required.

C. When unanticipated mechanical, electrical, or structural elements that conflict with intended function or design are encountered, investigate and measure the nature and extent of conflict. Promptly submit a written report to Architect.

3.2 UTILITY SERVICES

A. Existing Utilities: Maintain services indicated to remain and protect them against damage during selective demolition operations.

B. Do not interrupt existing utilities serving occupied or operating facilities unless authorized in writing by Owner and authorities having jurisdiction. Provide temporary services during interruptions to existing utilities, as acceptable to Owner and to authorities having jurisdiction.

1. Provide at least 72 hours' notice to Owner if shutdown of service is required during changeover.

C. Utility Requirements: Locate, identify, disconnect, and seal or cap off indicated utilities serving areas to be selectively demolished.

1. Owner will arrange to shut off indicated utilities when requested by Contractor.
2. If utility services are required to be removed, relocated, or abandoned, before proceeding with selective demolition provide temporary utilities that bypass area of selective demolition and that maintain continuity of service to other parts of building.
3. Cut off pipe or conduit in walls or partitions to be removed. Cap, valve, or plug and seal remaining portion of pipe or conduit after bypassing.

D. Utility Requirements: Refer to Division 15 and 16 Sections for shutting off, disconnecting, removing, and sealing or capping utilities. Do not start selective demolition work until utility disconnecting and sealing have been completed and verified in writing.

3.3 PREPARATION

A. Dangerous Materials: Drain, purge, or otherwise remove, collect, and dispose of chemicals, gases, explosives, acids, flammables, or other dangerous materials before proceeding with selective demolition operations.

B. Site Access and Temporary Controls: Conduct selective demolition and debris-removal operations to ensure minimum interference with roads, streets, walks, walkways, and other adjacent occupied and used facilities.

C. Temporary Facilities: Provide temporary barricades and other protection required to prevent injury to people and damage to adjacent buildings and facilities to remain.

1. Provide protection to ensure safe passage of people around selective demolition area and to and from occupied portions of building.
2. Provide temporary weather protection, during interval between selective demolition of existing construction on exterior surfaces and new construction, to prevent water leakage and damage to structure and interior areas.
3. Protect walls, ceilings, floors, and other existing finish work that are to remain or that are exposed during selective demolition operations.
4. Cover and protect furniture, furnishings, and equipment that have not been removed.

D. Temporary Enclosures: Provide temporary enclosures for protection of existing building and construction, in progress and completed, from exposure, foul weather, other construction operations, and similar activities. Provide temporary weathertight enclosure for building exterior.

E. Temporary Partitions: Erect and maintain dustproof partitions and temporary enclosures to limit dust and dirt migration and to separate areas from fumes and noise.

3.4 POLLUTION CONTROLS

A. Dust Control: Use water mist, temporary enclosures, and other suitable methods to limit spread of dust and dirt. Comply with governing environmental-protection regulations.

1. Wet mop floors to eliminate trackable dirt and wipe down walls and doors of demolition enclosure. Vacuum carpeted areas.

B. Disposal: Remove and transport debris in a manner that will prevent spillage on adjacent surfaces and areas.

C. Cleaning: Clean adjacent structures and improvements of dust, dirt, and debris caused by selective demolition operations. Return adjacent areas to condition existing before selective demolition operations began.

3.5 SELECTIVE DEMOLITION

A. General: Demolish and remove existing construction only to the extent required by new construction and as indicated. Use methods required to complete the Work within limitations of governing regulations and as follows:
1. Neatly cut openings and holes plumb, square, and true to dimensions required. Use cutting methods least likely to damage construction to remain or adjoining construction. Use hand tools or small power tools designed for sawing or grinding, not hammering and chopping, to minimize disturbance of adjacent surfaces. Temporarily cover openings to remain.
2. Cut or drill from the exposed or finished side into concealed surfaces to avoid marring existing finished surfaces.
3. Do not use cutting torches until work area is cleared of flammable materials. At concealed spaces, such as duct and pipe interiors, verify condition and contents of hidden space before starting flame-cutting operations. Maintain portable fire-suppression devices during flame-cutting operations.
4. Maintain adequate ventilation when using cutting torches.
5. Remove decayed, vermin-infested, or otherwise dangerous or unsuitable materials and promptly dispose of off-site.
6. Locate selective demolition equipment and remove debris and materials so as not to impose excessive loads on supporting walls, floors, or framing.
7. Dispose of demolished items and materials promptly.
8. Return elements of construction and surfaces that are to remain to condition existing before selective demolition operations began.

B. Existing Facilities: Comply with building manager's requirements for using and protecting elevators, stairs, walkways, loading docks, building entries, and other building facilities during selective demolition operations.

C. Removed and Salvaged Items: Comply with the following:
1. Store items in a secure area until delivery to Owner.
2. Transport items to Owner's storage area designated by Owner.
3. Protect items from damage during transport and storage.

D. Removed and Reinstalled Items: Comply with the following:

1. Clean and repair items to functional condition adequate for intended reuse. Paint equipment to match new equipment.
2. Protect items from damage during transport and storage.

3. Reinstall items in locations indicated. Comply with installation requirements for new materials and equipment. Provide connections, supports, and miscellaneous materials necessary to make item functional for use indicated.

E. Existing Items to Remain: Protect construction indicated to remain against damage and soiling during selective demolition. When permitted by Architect, items may be removed to a suitable, protected storage location during selective demolition and cleaned and reinstalled in their original locations after selective demolition operations are complete.

3.6 PATCHING AND REPAIRS

A. General: Promptly repair damage to adjacent construction caused by selective demolition operations.

B. Patching: Comply with Division 1 Section "Cutting and Patching."

C. Repairs: Where repairs to existing surfaces are required, patch to produce surfaces suitable for new materials.

D. Finishes: Restore exposed finishes of patched areas and extend restoration into adjoining construction in a manner that eliminates evidence of patching and refinishing.

3.7 DISPOSAL OF DEMOLISHED MATERIALS

A. General: Promptly dispose of demolished materials. Do not allow demolished materials to accumulate on-site.

B. Disposal: Transport demolished materials off Owner's property and legally dispose of them.

END OF SECTION 01732

SECTION 01731 - CUTTING AND PATCHING

PART 1 - GENERAL

1.1 RELATED DOCUMENTS

A. Drawings and general provisions of the Contract, including General and Supplementary Conditions and other Division 1 Specification Sections, apply to this Section.

1.2 SUMMARY

A. This Section includes procedural requirements for cutting and patching.

B. Related Sections include the following:

1. Division 1 Section "Selective Demolition" for demolition of selected portions of the building for alterations.
2. Divisions 2 through 16 Sections for specific requirements and limitations applicable to cutting and patching individual parts of the Work.

    a. Requirements in this Section apply to mechanical and electrical installations. Refer to Divisions 15 and 16 Sections for other requirements and limitations applicable to cutting and patching mechanical and electrical installations.

1.3 DEFINITIONS

A. Cutting: Removal of existing construction necessary to permit installation or performance of other Work.

B. Patching: Fitting and repair work required to restore surfaces to original conditions after installation of other Work.

1.4 QUALITY ASSURANCE

A. Structural Elements: Do not cut and patch structural elements in a manner that could change their load-carrying capacity or load-deflection ratio.

B. Operational Elements: Do not cut and patch operating elements and related components in a manner that results in reducing their capacity to perform as intended or that results in increased maintenance or decreased operational life or safety.

C. Visual Requirements: Do not cut and patch construction in a manner that results in visual evidence of cutting and patching. Do not cut and patch construction exposed on the exterior or in occupied spaces in a manner that would, in Architect's opinion, reduce the building's aesthetic qualities. Remove and replace construction that has been cut and patched in a visually unsatisfactory manner.

PART 2 - PRODUCTS

2.1 MATERIALS

A. General: Comply with requirements specified in other Sections of these Specifications.

B. Existing Materials: Use materials identical to existing materials. For exposed surfaces, use materials that visually match existing adjacent surfaces to the fullest extent possible.

1. If identical materials are unavailable or cannot be used, use materials that, when installed, will match the visual and functional performance of existing materials.

PART 3 - EXECUTION

3.1 EXAMINATION

A. Examine surfaces to be cut and patched and conditions under which cutting and patching are to be performed.

1. Compatibility: Before patching, verify compatibility with and suitability of substrates, including compatibility with existing finishes or primers.
2. Proceed with installation only after unsafe or unsatisfactory conditions have been corrected.

3.2 PREPARATION

A. Temporary Support: Provide temporary support of Work to be cut.

B. Protection: Protect existing construction during cutting and patching to prevent damage. Provide protection from adverse weather conditions for portions of Project that might be exposed during cutting and patching operations.

C. Adjoining Areas: Avoid interference with use of adjoining areas or interruption of free passage to adjoining areas.

D. Existing Services: Where existing services are required to be removed, relocated, or abandoned, bypass such services before cutting to minimize interruption of services to occupied areas.

3.3 PERFORMANCE

A. General: Employ skilled workers to perform cutting and patching. Proceed with cutting and patching at the earliest feasible time, and complete without delay.

1. Cut existing construction to provide for installation of other components or performance of other construction, and subsequently patch as required to restore surfaces to their original condition.

B. Cutting: Cut existing construction by sawing, drilling, breaking, chipping, grinding, and similar operations, including excavation, using methods least likely to damage elements retained or adjoining construction. If possible, review proposed procedures with original Installer; comply with original Installer's written recommendations.

1. In general, use hand or small power tools designed for sawing and grinding, not hammering and chopping. Cut holes and slots as small as possible, neatly to size required, and with minimum disturbance of adjacent surfaces. Temporarily cover openings when not in use.
2. Existing Finished Surfaces: Cut or drill from the exposed or finished side into concealed surfaces.
3. Excavating and Backfilling: Comply with requirements in applicable Division 2 Sections where required by cutting and patching operations.
4. Mechanical and Electrical Services: Cut off pipe or conduit in walls or partitions to be removed. Cap, valve, or plug and seal remaining portion of pipe or conduit to prevent entrance of moisture or other foreign matter after cutting.
5. Proceed with patching after construction operations requiring cutting are complete.

C. Patching: Patch construction by filling, repairing, refinishing, closing up, and similar operations following performance of other Work. Patch with durable seams that are as invisible as possible. Provide materials and comply with installation requirements specified in other Sections of these Specifications.

1. Inspection: Where feasible, test and inspect patched areas after completion to demonstrate integrity of installation.
2. Exposed Finishes: Restore exposed finishes of patched areas and extend finish restoration into retained adjoining construction in a manner that will eliminate evidence of patching and refinishing.
3. Floors and Walls: Where walls or partitions that are removed extend one finished area into another, patch and repair floor and wall surfaces in the new space. Provide an even surface of uniform finish, color, texture, and appearance. Remove existing floor and wall coverings and replace with new materials, if necessary, to achieve uniform color and appearance.

    a. Where patching occurs in a painted surface, apply primer and intermediate paint coats over the patch and apply final paint coat over entire unbroken surface containing the patch. Provide additional coats until patch blends with adjacent surfaces.

4. Ceilings: Patch, repair, or rehang existing ceilings as necessary to provide an even-plane surface of uniform appearance.
5. Exterior Building Enclosure: Patch components in a manner that restores enclosure to a weather tight condition.

END OF SECTION 01731

SECTION 02300 - EARTHWORK

PART 1 - GENERAL

1.1 RELATED DOCUMENTS

A. Drawings and general provisions of the Contract, including General and Supplementary Conditions and Division 1 Specification Sections, apply to this Section.

1.2 SUMMARY

A. This Section includes the following:

1. Preparing subgrades for ramps, walks, pavements, and plantings.

2. Restoration of paving and planting areas in the area of work

B. Related Sections include the following:

1. Division 1 Section "Construction Facilities and Temporary Controls."

1.3 DEFINITIONS

A. Backfill: Soil materials used to fill an excavation.

B. Base Course: Layer placed between the subbase course and asphalt paving.

C. Borrow: Satisfactory soil imported from off-site for use as fill or backfill.

D. Excavation: Removal of material encountered above subgrade elevations.

1. Additional Excavation: Excavation below subgrade elevations as directed by Architect. Additional excavation and replacement material will be paid for according to Contract provisions for changes in the Work.
2. Bulk Excavation: Excavations more than 10 feet (3 m) in width and pits more than 30 feet (9 m) in either length or width.
3. Unauthorized Excavation: Excavation below subgrade elevations or beyond indicated dimensions without direction by Architect. Unauthorized excavation, as well as remedial work directed by Architect, shall be without additional compensation.

E. Fill: Soil materials used to raise existing grades.

F. Rock: Rock material in beds, ledges, unstratified masses, and conglomerate deposits and boulders of rock material 3/4 cu. yd. (0.57 cu. m) or more in volume that when tested by an independent geotechnical testing agency, according to ASTM D 1586, exceeds a standard penetration resistance of 100 blows/2 inches (97 blows/50 mm).

G. Structures: Buildings, footings, foundations, retaining walls, slabs, tanks, curbs, mechanical and electrical appurtenances, or other man-made stationary features constructed above or below the ground surface.

H. Subbase Course: Layer placed between the subgrade and base course for asphalt paving, or layer placed between the subgrade and a concrete pavement or walk.

I. Subgrade: Surface or elevation remaining after completing excavation, or top surface of a fill or backfill immediately below subbase, drainage fill, or topsoil materials.

J. Utilities include on-site underground pipes, conduits, ducts, and cables, as well as underground services within buildings.

1.4 SUBMITTALS

A. Product Data: For the following:

1. Separation fabric.

PART 2 - PRODUCTS

2.1 SOIL MATERIALS

A. General: Provide borrow soil materials when sufficient satisfactory soil materials are not available from excavations.

B. Satisfactory Soils: ASTM D 2487 soil classification groups GW, GP, GM, SW, SP, and SM, or a combination of these group symbols; free of rock or gravel larger than 3 inches (75 mm) in any dimension, debris, waste, frozen materials, vegetation, and other deleterious matter.

C. Unsatisfactory Soils: ASTM D 2487 soil classification groups GC, SC, ML, MH, CL, CH, OL, OH, and PT, or a combination of these group symbols.

1. Unsatisfactory soils also include satisfactory soils not maintained within 2 percent of optimum moisture content at time of compaction.

D. Backfill and Fill: Satisfactory soil materials.

E. Subbase: Naturally or artificially graded mixture of natural or crushed gravel, crushed stone, and natural or crushed sand; ASTM D 2940; with at least 90 percent passing a 1-1/2- inch (38-mm) sieve and not more than 12 percent passing a No. 200 (0.075-mm) sieve.

F. Base: Naturally or artificially graded mixture of natural or crushed gravel, crushed stone, and natural or crushed sand; ASTM D 2940; with at least 95 percent passing a 1-1/2-inch (38-mm) sieve and not more than 8 percent passing a No. 200 (0.075-mm) sieve.

G. Engineered Fill: Naturally or artificially graded mixture of natural or crushed gravel, crushed stone, and natural or crushed sand; ASTM D 2940; with at least 90 percent passing a 1-1/2-inch (38-mm) sieve and not more than 12 percent passing a No. 200 (0.075-mm) sieve.

2.2 ACCESSORIES

A. Separation Fabric: Woven geotextile, specifically manufactured for use as a separation geotextile; made from polyolefins, polyesters, or polyamides; and with the following minimum properties determined according to ASTM D 4759 and referenced standard test methods:

1. Grab Tensile Strength: 200 lbf (890 N); ASTM D 4632.
2. Tear Strength: 75 lbf (333 N); ASTM D 4533.
3. Puncture Resistance: 90 lbf (400 N); ASTM D 4833.
4. Water Flow Rate: 4 gpm per sq. ft. (2.7 L/s per sq. m); ASTM D 4491.
5. Apparent Opening Size: No. 30 (0.6 mm); ASTM D 4751.

PART 3 - EXECUTION

3.1 PREPARATION

A. Protect structures, utilities, sidewalks, pavements, and other facilities from damage caused by settlement, lateral movement, undermining, washout, and other hazards created by earthwork operations.

B. Provide erosion-control measures to prevent erosion or displacement of soils and discharge of soil-bearing water runoff or airborne dust to adjacent properties and walkways.

3.2 EXCAVATION, GENERAL

A. Unclassified Excavation: Excavation to subgrade elevations regardless of the character of surface and subsurface conditions encountered, including rock, soil materials, and obstructions.

1. If excavated materials intended for fill and backfill include unsatisfactory soil materials and rock, replace with satisfactory soil materials.

2. Earth excavation includes excavating pavements and obstructions visible on surface; underground structures, utilities, and other items indicated to be removed; together with soil, boulders, and other materials not classified as rock or unauthorized excavation.

   a. Intermittent drilling; ram hammering; or ripping of material not classified as rock excavation is earth excavation.

3. Rock excavation includes removal and disposal of rock.

   a. Do not excavate rock until it has been classified and cross-sectioned by Architect.

3.3 EXCAVATION FOR WALKS AND PAVEMENTS

A. Excavate surfaces under walks and pavements to indicated cross sections, elevations, and grades.

3.4 APPROVAL OF SUBGRADE

A. Notify Architect when excavations have reached required subgrade.

B. If Architect determines that unsatisfactory soil is present, continue excavation and replace with compacted backfill or fill material as directed.

1. Additional excavation and replacement material will be paid for according to Contract provisions for changes in the Work.

C. Reconstruct subgrades damaged by freezing temperatures, frost, rain, accumulated water, or construction activities, as directed by Architect.

3.5 STORAGE OF SOIL MATERIALS

A. Stockpile borrow materials and satisfactory excavated soil materials. Stockpile soil materials without intermixing. Place, grade, and shape stockpiles to drain surface water. Cover to prevent windblown dust.

1. Stockpile soil materials away from edge of excavations. Do not store within drip line of remaining trees.

3.6 BACKFILL

A. Place and compact backfill in excavations promptly, but not before completing the following:
1. Construction below finish grade.
2. Removing trash and debris.

3.7 FILL

A. Preparation: Remove vegetation, topsoil, debris, unsatisfactory soil materials, obstructions, and deleterious materials from ground surface before placing fills.

B. Plow, scarify, bench, or break up sloped surfaces steeper than 1 vertical to 4 horizontal so fill material will bond with existing material.

C. Place and compact fill material in layers to required elevations as follows:

1. Under grass and planted areas, use satisfactory soil material.
2. Under walks and pavements, use satisfactory soil material.

3.8 MOISTURE CONTROL

A. Uniformly moisten or aerate subgrade and each subsequent fill or backfill layer before compaction to within 2 percent of optimum moisture content.

1. Do not place backfill or fill material on surfaces that are muddy, frozen, or contain frost or ice.
2. Remove and replace, or scarify and air-dry, otherwise satisfactory soil material that exceeds optimum moisture content by 2 percent and is too wet to compact to specified dry unit weight.

3.9 COMPACTION OF BACKFILLS AND FILLS

A. Place backfill and fill materials in layers not more than 8 inches (200 mm) in loose depth for material compacted by heavy compaction equipment, and not more than 4 inches (100 mm) in loose depth for material compacted by hand-operated tampers.

B. Place backfill and fill materials evenly on all sides of structures to required elevations, and uniformly along the full length of each structure.

C. Compact soil to not less than the following percentages of maximum dry unit weight according to ASTM D 1557:

1. Under structures, building slabs, steps, and pavements, scarify and recompact top 12 inches (300 mm) of existing subgrade and each layer of backfill or fill material at 95 percent.
2. Under walkways, scarify and recompact top 6 inches (150 mm) below subgrade and compact each layer of backfill or fill material at 92 percent.
3. Under lawn or unpaved areas, scarify and recompact top 6 inches (150 mm) below subgrade and compact each layer of backfill or fill material at 85 percent.

3.10 GRADING

A. General: Uniformly grade areas to a smooth surface, free from irregular surface changes. Comply with compaction requirements and grade to cross sections, lines, and elevations indicated.

1. Provide a smooth transition between adjacent existing grades and new grades.
2. Cut out soft spots, fill low spots, and trim high spots to comply with required surface tolerances.

B. Site Grading: Slope grades to direct water away from buildings and to prevent ponding. Finish subgrades to required elevations within the following tolerances:

1. Lawn or Unpaved Areas: Plus or minus 1 inch (25 mm).
2. Walks: Plus or minus 1 inch (25 mm).
3. Pavements: Plus or minus 1/2 inch (13 mm).

3.11 SUBBASE AND BASE COURSES

A. Install separation fabric on prepared subgrade according to manufacturer's written instructions, overlapping sides and ends.

B. Under pavements and walks, place subbase course on separation fabric according to fabric manufacturer's written instructions and as follows:

1. Place base course material over subbase.
2. Compact subbase and base courses at optimum moisture content to required grades, lines, cross sections, and thickness to not less than 95 percent of maximum dry unit weight according to ASTM D 1557.
3. Shape subbase and base to required crown elevations and cross-slope grades.
4. When thickness of compacted subbase or base course is 6 inches (150 mm) or less, place materials in a single layer.
5. When thickness of compacted subbase or base course exceeds 6 inches (150 mm), place materials in equal layers, with no layer more than 6 inches (150 mm) thick or less than 3 inches (75 mm) thick when compacted.

3.12 PROTECTION

A. Protecting Graded Areas: Protect newly graded areas from traffic, freezing, and erosion. Keep free of trash and debris.

B. Repair and reestablish grades to specified tolerances where completed or partially completed surfaces become eroded, rutted, settled, or where they lose compaction due to subsequent construction operations or weather conditions.

1. Scarify or remove and replace soil material to depth as directed by Architect; reshape and recompact.

C. Where settling occurs before Project correction period elapses, remove finished surfacing, backfill with additional soil material, compact, and reconstruct surfacing.

1. Restore appearance, quality, and condition of finished surfacing to match adjacent work, and eliminate evidence of restoration to the greatest extent possible.

3.13 DISPOSAL OF SURPLUS AND WASTE MATERIALS

A. Disposal: Remove surplus satisfactory soil and waste material, including unsatisfactory soil, trash, and debris, and legally dispose of it off Owner's property.

END OF SECTION 02300

SECTION 03301 - CAST-IN-PLACE CONCRETE (LIMITED APPLICATIONS)

PART 1 - GENERAL

1.1 RELATED DOCUMENTS

A. Drawings and general provisions of the Contract, including General and Supplementary Conditions and Division 1 Specification Sections, apply to this Section.

1.2 SUMMARY

A. This Section specifies cast-in-place concrete, including reinforcement, concrete materials, mix design, placement procedures, and finishes.

B. Related Sections include the following:

1. Division 2 Section "Earthwork" for excavation of footings for slabs, ramps, walks and stairs.

1.3 QUALITY ASSURANCE

A. Installer Qualifications: An experienced installer who has completed concrete work similar in material, design, and extent to that indicated for this Project and whose work has resulted in construction with a record of successful in-service performance.

B. Manufacturer Qualifications: A firm experienced in manufacturing ready-mixed concrete products complying with ASTM C 94 requirements for production facilities and equipment.

C. Source Limitations: Obtain each type of cement of the same brand from the same manufacturer's plant, each aggregate from one source, and each admixture from the same manufacturer.

D. Comply with ACI 301, "Specification for Structural Concrete," including the following, unless modified by the requirements of the Contract Documents.

1. General requirements, including submittals, quality assurance, acceptance of structure, and protection of in-place concrete.
2. Formwork and form accessories.
3. Steel reinforcement and supports.
4. Concrete mixtures.
5. Handling, placing, and constructing concrete.

PART 2 - PRODUCTS

2.1 FORMWORK

A. Furnish formwork and form accessories according to ACI 301.

2.2 STEEL REINFORCEMENT

A. Reinforcing Bars: ASTM A 615/A 615M, Grade 60 deformed.

B. Plain-Steel Wire: ASTM A 82, as drawn.

C. Plain-Steel Welded Wire Fabric: ASTM A 185, fabricated from as-drawn steel wire into flat sheets.

D. Deformed-Steel Welded Wire Fabric: ASTM A 497, flat sheet.

2.3 CONCRETE MATERIALS

A. Portland Cement: ASTM C 150, Types I or II.

B. Normal-Weight Aggregate: ASTM C 33, uniformly graded, not exceeding 1-1/2-inch nominal size.

C. Lightweight Aggregate: ASTM C 330.

D. Water: Potable and complying with ASTM C 94.

2.4 ADMIXTURES

A. General: Admixtures certified by manufacturer to contain not more than 0.1 percent water-soluble chloride ions by mass of cement and to be compatible with other admixtures. Do not use admixtures containing calcium chloride.

B. Air-Entraining Admixture: ASTM C 260.

C. Water-Reducing Admixture: ASTM C 494, Type A.

2.5 RELATED MATERIALS

A. Fine-Graded Granular Material: Clean mixture of crushed stone, crushed gravel, and manufactured or natural sand; ASTM D 448, Size 10, with 100 percent passing a No. 4 (4.75-mm) sieve and 10 to 30 percent passing a No. 100 (0.15-mm) sieve; complying with deleterious substance limits of ASTM C 33 for fine aggregates.

B. Joint-Filler Strips: ASTM D 1751, asphalt-saturated cellulosic fiber, or ASTM D 1752, cork or self-expanding cork.

2.6 CONCRETE MIXES

A. Comply with ACI 301 requirements for concrete mixtures.

B. Prepare design mixes, proportioned according to ACI 301, for normal-weight concrete determined by either laboratory trial mix or field test data bases, as follows:

1. Compressive Strength (28 Days): 3000 psi for walls and footings, 4000 psi for slabs.
2. Slump: 4 inches (100 mm).

C. Add air-entraining admixture at manufacturer's prescribed rate to result in concrete at point of placement having an air content of 6.0 percent within a tolerance of plus 1.0 or minus 1.5 percent.

2.7 CONCRETE MIXING

A. Ready-Mixed Concrete: Comply with ASTM C 94.

B. Project-Site Mixing: Measure, batch, and mix concrete materials and concrete according to ASTM C 94. Mix concrete materials in appropriate drum-type batch machine mixer.

1. For mixer capacity of 1 cu. yd. (0.76 cu. m) or smaller, continue mixing at least one and one-half minutes, but not more than five minutes after ingredients are in mixer, before any part of batch is released.

PART 3 - EXECUTION

3.1 FORMWORK

A. Design, construct, erect, shore, brace, and maintain formwork according to ACI 301.

3.2 STEEL REINFORCEMENT

A. Comply with CRSI's "Manual of Standard Practice" for fabricating, placing, and supporting reinforcement.

1. Do not cut or puncture vapor retarder. Repair damage and reseal vapor retarder before placing concrete.

3.3 JOINTS

A. General: Construct joints true to line with faces perpendicular to surface plane of concrete.

B. Construction Joints: Locate and install so as not to impair strength or appearance of concrete, at locations indicated or as approved by Architect.

C. Isolation Joints: Install joint-filler strips at junctions with slabs-on-grade and vertical surfaces, such as column pedestals, foundation walls, grade beams, and other locations, as indicated.

1. Extend joint fillers full width and depth of joint, terminating flush with finished concrete surface, unless otherwise indicated.

2. Rout out joint filler to a depth of ½" and form a urethane sealant joint using a bond breaker on the bottom and primer on the sides as recommended by the sealant manufacturer.

D. Contraction (Control) Joints in Slabs-on-Grade: Form weakened-plane contraction joints, sectioning concrete into areas as indicated. Construct contraction joints for a depth equal to at least one-fourth of the concrete thickness, as follows:

1. Grooved Joints: Form contraction joints after initial floating by grooving and finishing each edge of joint with groover tool to a radius of 1/8 inch. Repeat grooving of contraction joints after applying surface finishes. Eliminate groover marks on concrete surfaces.
2. Sawed Joints: Form contraction joints with power saws equipped with shatterproof abrasive or diamond-rimmed blades. Cut 1/8-inch wide joints into concrete when cutting action will not tear, abrade, or otherwise damage surface and before concrete develops random contraction cracks.

3.4 CONCRETE PLACEMENT

A. Comply with recommendations in ACI 304R for measuring, mixing, transporting, and placing concrete.

B. Do not add water to concrete during delivery, at Project site, or during placement.

C. Consolidate concrete with mechanical vibrating equipment.

3.5 FINISHING SURFACES

A. Provide a float and light broom finish for slabs, ramps, stairs and walks.

3.6 TOLERANCES

A. Comply with ACI 117, "Specifications for Tolerances for Concrete Construction and Materials."

3.7 CONCRETE PROTECTION AND CURING

A. General: Protect freshly placed concrete from premature drying and excessive cold or hot temperatures. Comply with ACI 306.1 for cold-weather protection, and follow recommendations in ACI 305R for hot-weather protection during curing.

B. Evaporation Retarder: Apply evaporation retarder to concrete surfaces if hot, dry, or windy conditions cause moisture loss approaching 0.2 lb/sq. ft. x h (1 kg/sq. m x h) before and during finishing operations. Apply according to manufacturer's written instructions after placing, screeding, and bull floating or darbying concrete, but before float finishing.

C. Begin curing after finishing concrete, but not before free water has disappeared from concrete surface.

D. Curing Methods: Cure formed and unformed concrete for at least seven days by moisture curing, moisture-retaining-cover curing, curing compound, or a combination of these:

3.8 REPAIRS

A. Remove and replace concrete that does not comply with requirements in this Section.

END OF SECTION 03301

SECTION 04810 - UNIT MASONRY ASSEMBLIES

GENERAL

1.1 RELATED DOCUMENTS

A. Drawings and general provisions of the Contract, including General and Supplementary Conditions and Division 1 Specification Sections, apply to this Section.

1.2 SUMMARY

A. This Section includes unit masonry assemblies consisting of the following:

1. Concrete masonry units.
2. Mortar and grout.
3. Ties and anchors.

1.3 SUBMITTALS

A. Product Data: For each different masonry unit, accessory, and other manufactured product specified.

1.4 QUALITY ASSURANCE

A. Source Limitations for Masonry Units: Obtain exposed masonry units of a uniform texture and color, or a uniform blend within the ranges accepted for these characteristics, through one source from a single manufacturer for each product required.

B. Source Limitations for Mortar Materials: Obtain mortar ingredients of a uniform quality, including color for exposed masonry, from one manufacturer for each cementitious component and from one source or producer for each aggregate.

1.5 DELIVERY, STORAGE, AND HANDLING

A. Store masonry units on elevated platforms in a dry location. If units are not stored in an enclosed location, cover tops and sides of stacks with waterproof sheeting, securely tied. If units become wet, do not install until they are dry.

B. Store cementitious materials on elevated platforms, under cover, and in a dry location. Do not use cementitious materials that have become damp.

C. Deliver preblended, dry mortar mix in moisture-resistant containers designed for lifting and emptying into dispensing silo. Store preblended, dry mortar mix in delivery containers on elevated platforms, under cover, and in a dry location or in a metal dispensing silo with weatherproof cover.

D. Store masonry accessories, including metal items, to prevent corrosion and accumulation of dirt and oil.

1.6 PROJECT CONDITIONS

A. Cold-Weather Requirements: Do not use frozen materials or materials mixed or coated with ice or frost. Do not build on frozen substrates. Remove and replace unit masonry damaged by frost or by freezing conditions. Comply with cold-weather construction requirements contained in ACI 530.1/ASCE 6/TMS 602.

B. Hot-Weather Requirements: Protect unit masonry work when temperature and humidity conditions produce excessive evaporation of water from mortar and grout. Provide artificial shade and wind breaks and use cooled materials as required.

PART 2 - PRODUCTS

2.1 CONCRETE MASONRY UNITS

A. General: Provide shapes indicated and as follows:

1. Provide special shapes for wall ends, corners and caps.
2. Provide square-edged units for outside corners.

B. Concrete Masonry Units: ASTM C 90 and as follows:

1. Unit Compressive Strength: Provide units with minimum average net-area compressive strength of 1900 psi .
2. Weight Classification: Lightweight].
3. Provide Type II, nonmoisture-controlled units.
4. Size (Width): Manufactured to the following dimensions:

   a. 6 inches nominal; 5-5/8 inches actual.
   b. Exposed Faces: Manufacturer's standard colors and textures.

2.2 MORTAR AND GROUT MATERIALS

A. Portland Cement-Lime Mix: Packaged blend of portland cement complying with ASTM C 150, Type I or Type III, and hydrated lime complying with ASTM C 207.

B. Aggregate for Mortar: ASTM C 144.

C. Aggregate for Grout: ASTM C 404.

D. Water-Repellent Admixture: Liquid water-repellent mortar admixture intended for use with concrete masonry units, containing integral water repellent by same manufacturer.

E. Water: Potable.

2.3 MORTAR AND GROUT MIXES

A. General: Do not use admixtures, including pigments, air-entraining agents, accelerators, retarders, water-repellent agents, antifreeze compounds, or other admixtures, unless otherwise indicated.

1. Do not use calcium chloride in mortar or grout.

B. Preblended, Dry Mortar Mix: Furnish dry mortar ingredients in the form of a preblended mix. Measure quantities by weight to ensure accurate proportions, and thoroughly blend ingredients before delivering to Project site.

C. Mortar for Unit Masonry: Comply with ASTM C 270 Proportion Specification.

D. Grout for Unit Masonry: Comply with ASTM C 476

PART 3 - EXECUTION

3.1 EXAMINATION

A. Examine conditions, with Installer present, for compliance with requirements for installation tolerances and other conditions affecting performance.

3.2 INSTALLATION, GENERAL

A. Thickness: Build single-wythe walls to the actual widths of masonry units, using units of widths indicated.

B. Leave openings for equipment to be installed before completing masonry. After installing equipment, complete masonry to match the construction immediately adjacent to the opening.

C. Cut masonry units with motor-driven saws to provide clean, sharp, unchipped edges. Cut units as required to provide a continuous pattern and to fit adjoining construction. Where possible, use full-size units without cutting. Allow units cut with water-cooled saws to dry before placing, unless wetting of units is specified. Install cut units with cut surfaces and, where possible, cut edges concealed.

3.3 CONSTRUCTION TOLERANCES

A. Comply with tolerances in ACI 530.1/ASCE 6/TMS 602

3.4 LAYING MASONRY WALLS

A. Lay out walls in advance for accurate spacing of surface bond patterns with uniform joint thicknesses and for accurate location of openings, movement-type joints, returns, and offsets.

Avoid using less-than-half-size units, particularly at corners, jambs, and, where possible, at other locations.

B. Bond Pattern for Exposed Masonry: Lay exposed masonry in the following bond pattern; do not use units with less than nominal 4-inch horizontal face dimensions at corners or jambs.

1. Running bond or as indicated on the drawings.

3.5 MORTAR BEDDING AND JOINTING

A. Lay hollow masonry units as follows:

1. With full mortar coverage on horizontal and vertical face shells.
2. Bed webs in mortar in starting course on footings and in all courses of piers, columns, and pilasters, and where adjacent to cells or cavities to be filled with grout.
3. For starting course on footings where cells are not grouted, spread out full mortar bed, including areas under cells.

B. Tool exposed joints slightly concave when thumbprint hard, using a jointer larger than the joint thickness, unless otherwise indicated.

3.6 REPAIRING, POINTING, AND CLEANING

A. Remove and replace masonry units that are loose, chipped, broken, stained, or otherwise damaged or that do not match adjoining units. Install new units to match adjoining units; install in fresh mortar, pointed to eliminate evidence of replacement.

B. Pointing: During the tooling of joints, enlarge voids and holes, except weep holes, and completely fill with mortar. Point up joints, including corners, openings, and adjacent construction, to provide a neat, uniform appearance. Prepare joints for sealant application.

C. In-Progress Cleaning: Clean unit masonry as work progresses by dry brushing to remove mortar fins and smears before tooling joints.

D. Final Cleaning: After mortar is thoroughly set and cured, clean exposed masonry as follows:

1. Remove large mortar particles by hand with wooden paddles and nonmetallic scrape hoes or chisels.

END OF SECTION 04810

SECTION 05120 - STRUCTURAL STEEL

PART 1 - GENERAL

1.1 RELATED DOCUMENTS

A. Drawings and general provisions of the Contract, including General and Supplementary Conditions and Division 01 Specification Sections, apply to this Section.

1.2 SUMMARY

A. Section Includes:

1. Structural steel.

1.3 ACTION SUBMITTALS

A. Shop Drawings: Show fabrication of structural-steel components.

1. Include details of cuts, connections, splices, camber, holes, and other pertinent data.
2. Include embedment drawings.
3. Indicate welds by standard AWS symbols, distinguishing between shop and field welds, and show size, length, and type of each weld. Show backing bars that are to be removed and supplemental fillet welds where backing bars are to remain.
4. Indicate type, size, and length of bolts, distinguishing between shop and field bolts. Identify pretensioned and slip-critical high-strength bolted connections.

1.4 DELIVERY, STORAGE, AND HANDLING

A. Store materials to permit easy access for inspection and identification. Keep steel members off ground and spaced by using pallets, dunnage, or other supports and spacers. Protect steel members and packaged materials from corrosion and deterioration.

1. Do not store materials on structure in a manner that might cause distortion, damage, or overload to members or supporting structures. Repair or replace damaged materials or structures as directed.

B. Store fasteners in a protected place in sealed containers with manufacturer's labels intact.

1. Fasteners may be repackaged provided Owner's testing and inspecting agency observes repackaging and seals containers.
2. Clean and relubricate bolts and nuts that become dry or rusty before use.
3. Comply with manufacturers' written recommendations for cleaning and lubricating ASTM F 1852 fasteners and for retesting fasteners after lubrication.

1.5 COORDINATION

A. Coordinate selection of shop primers with topcoats to be applied over them. Comply with paint and coating manufacturers' recommendations to ensure that shop primers and topcoats are compatible with one another.

B. Coordinate installation of anchorage items to be embedded in or attached to other construction without delaying the Work. Provide setting diagrams, sheet metal templates, instructions, and directions for installation.

PART 2 - PRODUCTS

2.1 STRUCTURAL-STEEL MATERIALS

A. Recycled Content of Steel Products: Postconsumer recycled content plus one-half of preconsumer recycled content not less than 25 percent.

B. Recycled Content of Steel Products: Provide products with an average recycled content of steel products so postconsumer recycled content plus one-half of preconsumer recycled content is not less than the following:
   1. Channels, Angles and Plates: 25 percent.
   2. Cold-Formed Hollow Structural Sections: 25 percent.
   3. All Other Steel Materials: 25 percent.

C. Channels, Angles and Plates: ASTM A 36.

D. Cold-Formed Hollow Structural Sections: ASTM A 500, Grade B, structural tubing.

2.2 BOLTS, CONNECTORS, AND ANCHORS

A. High-Strength Bolts, Nuts, and Washers: ASTM A 325 (ASTM A 325M), Type 1, heavy-hex steel structural bolts; ASTM A 563, Grade C, (ASTM A 563M, Class 8S) heavy-hex carbon-steel nuts; and ASTM F 436 (ASTM F 436M), Type 1, hardened carbon-steel washers; all with plain finish.

2.3 PRIMER

A. Primer: Comply with Section 09911 "Exterior Painting" and Section 09912 "Interior Painting."

2.4 FABRICATION

A. Structural Steel: Fabricate and assemble in shop to greatest extent possible. Fabricate according to AISC's "Code of Standard Practice for Steel Buildings and Bridges" and AISC 360.

   1. Mark and match-mark materials for field assembly.
   2. Complete structural-steel assemblies, including welding of units, before starting shop-priming operations.

B. Bolt Holes: Cut, drill,or punch standard bolt holes perpendicular to metal surfaces.

C. Finishing: Accurately finish ends of columns and other members transmitting bearing loads.

2.5 SHOP PRIMING

A. Shop prime steel surfaces except the following:

1. Steel concealed from view in the finished building.

B. Painting: Prepare steel and apply a one-coat, nonasphaltic primer complying with SSPC-PS Guide 7.00, "Painting System Guide 7.00: Guide for Selecting One-Coat Shop Painting Systems," to provide a dry film thickness of not less than 1.5 mils (0.038 mm).

PART 3 - EXECUTION

3.1 EXAMINATION

A. Verify, with steel Erector present, elevations of concrete-bearing surfaces and locations of anchor rods, bearing plates, and other embedments for compliance with requirements.

1. Prepare a certified survey of bearing surfaces, anchor rods, bearing plates, and other embedments showing dimensions, locations, angles, and elevations.

B. Proceed with installation only after unsatisfactory conditions have been corrected.

3.2 PREPARATION

A. Provide temporary shores, guys, braces, and other supports during erection to keep structural steel secure, plumb, and in alignment against temporary construction loads and loads equal in intensity to design loads. Remove temporary supports when permanent structural steel, connections, and bracing are in place unless otherwise indicated.

3.3 ERECTION

A. Set structural steel accurately in locations and to elevations indicated and according to AISC 303 and AISC 360.

B. Base Plates: Clean concrete-bearing surfaces of bond-reducing materials, and roughen surfaces prior to setting plates. Clean bottom surface of plates.

1. Set plates for structural members on wedges, shims, or setting nuts as required.
2. Weld plate washers to top of baseplate.

C. Maintain erection tolerances of structural steel within AISC's "Code of Standard Practice for Steel Buildings and Bridges."

D. Align and adjust various members that form part of complete frame or structure before permanently fastening. Before assembly, clean bearing surfaces and other surfaces that will be in permanent contact with members. Perform necessary adjustments to compensate for discrepancies in elevations and alignment.

1. Level and plumb individual members of structure.

E. Splice members only where indicated.

F. Do not enlarge unfair holes in members by burning or using drift pins. Ream holes that must be enlarged to admit bolts.

END OF SECTION 05120

SECTION 05700 - ORNAMENTAL METAL

PART 1 - GENERAL

1.1 RELATED DOCUMENTS

A. Drawings and general provisions of the Contract, including General and Supplementary Conditions and Division 1 Specification Sections, apply to this Section.

1.2 SUMMARY

A. This Section includes the following:

1. Ornamental railings fabricated from custom shapes.

2. Handrails, supports, brackets and inserts.

3. Shop painting of primer and finish coats.

1.3 PERFORMANCE REQUIREMENTS FOR HANDRAILS AND RAILINGS

A. Structural Performance of Handrails and Railings: Provide handrails and railings complying with requirements of ASTM E 985 for structural performance, based on testing performed according to ASTM E 894 and ASTM E 935.

B. Control of Corrosion: Prevent galvanic action and other forms of corrosion by insulating metals and other materials from direct contact with incompatible materials.

1.4 SUBMITTALS

A. Product Data: For each product used in ornamental metal, including finishing materials and methods.

1. Include Product Data for grout and anchoring cement.

B. Shop Drawings: Show fabrication and installation of ornamental metal. Include plans, elevations, component details, and attachments to other Work. Indicate materials and profiles of each ornamental metal member, fittings, joinery, finishes, fasteners, anchorages, and accessory items.

C. Samples for Verification: For each profile and pattern of fabricated metal and for each type of metal finish required, prepared on metal of same thickness and alloy indicated for the Work. Show sample with welded joint.

1. Include 6-inch- (150-mm-) long samples of linear shapes.

1.5 QUALITY ASSURANCE

A. Installer Qualifications: Arrange for installation of ornamental metal specified in this Section by the same firm that fabricated it.

B. Fabricator Qualifications: A firm experienced in producing ornamental metal similar to that indicated for this Project and with a record of successful in-service performance, as well as sufficient production capacity to produce required units.

C. Welding Standards: Qualify procedures and personnel according to the following:

1. AWS D1.1, "Structural Welding Code--Steel."

1.6 DELIVERY, STORAGE, AND HANDLING

A. Store ornamental metal inside a well-ventilated area, away from uncured concrete and masonry, and protected from weather, moisture, soiling, abrasion, extreme temperatures, and humidity.

1.7 PROJECT CONDITIONS

A. Field Measurements: Where ornamental metal is indicated to fit to other construction, verify dimensions of other construction by field measurements before fabrication and indicate measurements on Shop Drawings. Coordinate fabrication schedule with construction progress to avoid delaying the Work.

1.8 COORDINATION

A. Coordinate installation of anchorages for ornamental metal items. Furnish Setting Drawings, templates, and directions for installing anchorages, including sleeves, concrete inserts, anchor bolts, and items with integral anchors, that are to be embedded in concrete or masonry. Deliver such items to Project site in time for installation.

PART 2 - PRODUCTS

2.1 METALS

A. General: Provide metals free from surface blemishes where exposed to view in finished unit. Exposed-to-view surfaces exhibiting pitting, seam marks, roller marks, stains, discolorations, or other imperfections on finished units are not acceptable.

1. Extruded Bars and Shapes: ASTM B 221 (ASTM B 221M), alloy 6063-T6.
2. Extruded Pipe and Tubes: ASTM B 429, alloy 6063-T6.

2.2 MISCELLANEOUS MATERIALS

A. Welding Electrodes and Filler Metal: Type and alloy of filler metal and electrodes as recommended by producer of metal to be welded, complying with applicable AWS specifications, and as required for color match, strength, and compatibility in fabricated items.

B. Fasteners: Use fasteners of same basic metal as fastened metal, unless otherwise indicated. Do not use metals that are corrosive or incompatible with materials joined.

1. Provide concealed fasteners for interconnecting ornamental metal components and for attaching them to other work, unless exposed fasteners are unavoidable or are the standard fastening method.

C. Cast-in-Place and Postinstalled Anchors: Anchors of type indicated below, fabricated from corrosion-resistant materials with capability to sustain, without failure, a load equal to six times the load imposed when installed in unit masonry and equal to four times the load imposed when installed in concrete as determined by testing per ASTM E 488 conducted by a qualified independent testing agency.

1. Cast-in-place anchors.

D. Nonshrink, Nonmetallic Grout: Premixed, factory-packaged, nonstaining, noncorrosive, nongaseous grout complying with ASTM C 1107. Provide grout specifically recommended by manufacturer for interior and exterior applications.

E. Shop Primer for Galvanized Steel: Zinc-dust, zinc-oxide primer formulated for priming zinc-coated steel and for compatibility with finish paint systems indicated, and complying with SSPC-Paint 5.

2.3 FABRICATION, GENERAL

A. Form ornamental metal to required shapes and sizes, with true curves, lines, and angles. Provide components in sizes and profiles indicated, but not less than that needed to comply with requirements indicated for structural performance.

B. Provide necessary rebates, lugs, and brackets to assemble units and to attach to other work. Drill and tap for required fasteners, unless otherwise indicated. Use concealed fasteners where possible.

C. Comply with AWS for recommended practices in shop welding and brazing. Provide welds and brazes behind finished surfaces without distorting or discoloring exposed side. Clean exposed welded and brazed joints of all flux, and dress all exposed and contact surfaces.

D. Mill joints to a tight, hairline fit. Cope or miter corner joints. Form joints exposed to weather to exclude water penetration.

E. Finish exposed surfaces to smooth, sharp, well-defined lines and arris.

F. Assemble items in the shop to greatest extent possible to minimize field splicing and assembly. Disassemble units only as necessary for shipping and handling limitations. Clearly mark units

for reassembly and coordinated installation. Use connections that maintain structural value of joined pieces.

2.4 FABRICATING HANDRAILS AND RAILINGS

A. Welded Connections: Fabricate handrails and railings for connecting members by welding. Cope components at perpendicular and skew connections to provide close fit, or use fittings designed for this purpose. Weld connections continuously to comply with the following:

1. Use materials and methods that minimize distortion and develop strength and corrosion resistance of base metals.
2. Obtain fusion without undercut or overlap.
3. Remove flux immediately.
4. At exposed connections, finish exposed surfaces smooth and blended so no roughness shows after finishing and welded surface matches contours of adjoining surfaces.
5. Provide welded connections for ferrous handrails and railings.

B. Form changes in direction of railing members as follows:

1. As detailed.

C. Form simple and compound curves by bending members in jigs to produce uniform curvature for each repetitive configuration required; maintain profile of member throughout entire bend without buckling, twisting, or otherwise deforming exposed surfaces of handrail and railing components.

D. Provide wall returns at ends of wall-mounted handrails, unless otherwise indicated; close ends of returns.

E. Close exposed ends of handrail and railing members with manufacturer's standard prefabricated end fittings.

F. Brackets, Flanges, Fittings, and Anchors: Provide wall brackets, flanges, miscellaneous fittings, and anchors to interconnect handrail and railing members to other work, unless otherwise indicated.

1. Furnish inserts and other anchorage devices for connecting handrails and railings to concrete or masonry work. Fabricate anchorage devices capable of withstanding loads imposed by handrails and railings. Coordinate anchorage devices with supporting structure.
2. For railing posts set in concrete, provide preset sleeves of steel, not less than 6 inches (150 mm) long and inside dimensions not less than 1/2 inch (13 mm) greater than outside dimensions of post, with steel plate forming bottom closure.

2.5 IRON AND STEEL FINISHES

A. Galvanizing: Hot-dip galvanize products made from rolled, pressed, and forged steel shapes, castings, plates, bars, and strips indicated to be galvanized to comply with ASTM A 123.

1. Hot-dip galvanize iron and steel hardware indicated to be galvanized to comply with ASTM A 153/A 153M.

B. Fill vent and drain holes that will be exposed in finished Work, unless indicated to remain as weep holes, by plugging with zinc solder and filing off smooth.

C. Preparation for Shop Priming: After galvanizing, thoroughly clean ornamental metal of grease, dirt, oil, flux, and other foreign matter, and treat with metallic-phosphate process.

1. Exteriors (SSPC Zone 1B): SSPC-SP 6, "Commercial Blast Cleaning."

D. Painted Finish: Comply with Division 9 painting Sections

PART 3 - EXECUTION

3.1 INSTALLATION, GENERAL

A. Provide anchorage devices and fasteners where necessary for securing ornamental metal to in-place construction.

B. Perform cutting, drilling, and fitting required to install ornamental metal. Set products accurately in location, alignment, and elevation; measured from established lines and levels. Provide temporary bracing or anchors in formwork for items to be built into concrete, masonry, or similar construction.

C. Fit exposed connections accurately together to form tight, hairline joints or, where indicated, with uniform reveals and spaces for sealants and joint fillers. Where cutting, welding, and grinding are required for proper shop fitting and jointing of ornamental metal, restore finishes to eliminate any evidence of such corrective work.

D. Field Welding: Comply with applicable AWS specification for procedures of manual shielded metal arc welding, for appearance and quality of welds, and for methods used in correcting welding work. Weld connections that are not to be left as exposed joints but cannot be shop welded because of shipping size limitations. Grind exposed welded joints smooth and restore finish to match finish of adjacent surfaces.

3.2 INSTALLING HANDRAILS AND RAILINGS

A. Adjust handrails and railings before anchoring to ensure alignment at abutting joints.

B. Concrete-Anchored Posts in Core-Drilled Holes: Core-drill concrete to produce holes with a diameter at least 3/4 inch (20 mm) larger than OD of post and not less than 5 inches (125 mm) deep. Clean holes of loose material, insert posts, and fill annular space between post and concrete with nonshrink, nonmetallic grout, mixed and placed to comply with grout manufacturer's written instructions.

1. Leave anchorage joint exposed; wipe off excess grout; and leave a 1/8-inch (3.2-mm) build-up, sloped away from post.

C. Welded Connections: Use fully welded joints for permanently connecting railing components by welding. Cope or butt components to provide 100 percent contact or use fittings designed for this purpose.

D. Anchor railing ends into concrete or masonry with fittings designed for this purpose.

3.3 CLEANING

A. Touchup Painting: Immediately after erection, clean field welds, bolted connections, and abraded areas of shop paint, and paint exposed areas with same material.

B. Galvanized Surfaces: Clean field welds, bolted connections, and abraded areas and repair galvanizing to comply with ASTM A 780.

3.4 PROTECTION

A. Restore finishes damaged during installation and construction period so no evidence remains of correction work. Return items that cannot be refinished in the field to the shop; make required alterations and refinish entire unit, or provide new units.

END OF SECTION 05700

SECTION 061053 - MISCELLANEOUS ROUGH CARPENTRY

PART 1 - GENERAL

1.1 RELATED DOCUMENTS

A. Drawings and general provisions of the Contract, including General and Supplementary Conditions and Division 01 Specification Sections, apply to this Section.

1.2 SUMMARY

A. Section Includes:

1. Framing with dimension lumber.
2. Wood blocking and nailers.
3. Plywood sheathing and panels.

B. Related Requirements:

1. Section 062013 "Exterior Finish Carpentry" for nonstructural carpentry items exposed to view and not specified in another Section.

1.3 DEFINITIONS

A. Dimension Lumber: Lumber of 2 inches nominal (38 mm actual) or greater but less than 5 inches nominal (114 mm actual) in least dimension.

B. Lumber grading agencies, and the abbreviations used to reference them, include the following:

1. NeLMA: Northeastern Lumber Manufacturers' Association.
2. NHLA: National Hardwood Lumber Association.
3. NLGA: National Lumber Grades Authority.
4. SPIB: The Southern Pine Inspection Bureau.

1.4 QUALITY ASSURANCE

A. Testing Agency Qualifications: For testing agency providing classification marking for fire-retardant treated material, an inspection agency acceptable to authorities having jurisdiction that periodically performs inspections to verify that the material bearing the classification marking is representative of the material tested.

1.5 DELIVERY, STORAGE, AND HANDLING

A. Stack lumber flat with spacers beneath and between each bundle to provide air circulation. Protect lumber from weather by covering with waterproof sheeting, securely anchored. Provide for air circulation around stacks and under coverings.

PART 2 - PRODUCTS

2.1 WOOD PRODUCTS, GENERAL

A. Lumber: DOC PS 20 and applicable rules of grading agencies indicated. If no grading agency is indicated, provide lumber that complies with the applicable rules of any rules-writing agency certified by the ALSC Board of Review. Provide lumber graded by an agency certified by the ALSC Board of Review to inspect and grade lumber under the rules indicated.

1. Factory mark each piece of lumber with grade stamp of grading agency.

B. Maximum Moisture Content of Lumber: 19 percent-.

2.2 WOOD-PRESERVATIVE-TREATED MATERIALS

A. Preservative Treatment by Pressure Process: AWPA U1; Use Category UC3b for exterior construction not in contact with the ground..

1. Preservative Chemicals: Acceptable to authorities having jurisdiction and containing no arsenic or chromium.

B. Kiln-dry lumber after treatment to a maximum moisture content of 19 percent. Do not use material that is warped or does not comply with requirements for untreated material.

C. Mark lumber with treatment quality mark of an inspection agency approved by the ALSC Board of Review.

D. Application: Treat items indicated on Drawings, and the following:

1. Wood cants, nailers, curbs, equipment support bases, blocking, stripping, and similar members in connection with roofing, flashing, vapor barriers, and waterproofing.
2. Wood sills, sleepers, blocking, and similar concealed members in contact with masonry or concrete.

2.3 DIMENSION LUMBER FRAMING

A. Other Framing: **No. 2** grade and any of the following species:

1. Hem-fir (north); NLGA.
2. Southern pine; SPIB.
3. Spruce-pine-fir; NLGA.

2.4 MISCELLANEOUS LUMBER

A. General: Provide miscellaneous lumber indicated and lumber for support or attachment of other construction, including the following:

1. Blocking.
2. Nailers.
3. Cants.

B. For items of dimension lumber size, provide Construction or No. 2 grade lumber

C. For concealed boards, provide lumber with 19 percent maximum moisture content and any of the following species and grades:

1. Eastern softwoods, No. 2 Common grade; NELMA.

2.5 PLYWOOD BACKING PANELS

A. Equipment Backing Panels: DOC PS 1, Exposure 1, C-D Plugged, in thickness indicated.

2.6 FASTENERS

A. General: Provide fasteners of size and type indicated that comply with requirements specified in this article for material and manufacture.

1. Where carpentry is exposed to weather, in ground contact, pressure-preservative treated, or in area of high relative humidity, provide fasteners[with hot-dip zinc coating complying with ASTM A 153/A 153M.

B. Nails, Brads, and Staples: ASTM F 1667.

C. Power-Driven Fasteners: NES NER-272.

D. Wood Screws: ASME B18.6.1.

E. Bolts: Steel bolts complying with ASTM A 307, Grade A (ASTM F 568M, Property Class 4.6); with ASTM A 563 (ASTM A 563M) hex nuts and, where indicated, flat washers. Provide hot dipped galvanized or stainless steel where exposed to the elements.

F. Expansion Anchors: Anchor bolt and sleeve assembly of material indicated below with capability to sustain, without failure, a load equal to 6 times the load imposed when installed in unit masonry assemblies and equal to 4 times the load imposed when installed in concrete as determined by testing per ASTM E 488 conducted by a qualified independent testing and inspecting agency.

1. Material: Carbon-steel components, zinc plated to comply with ASTM B 633, Class Fe/Zn 5.
2. Material: Stainless steel with bolts and nuts complying with ASTM F 593 and ASTM F 594, Alloy Group 1 or 2 (ASTM F 738M and ASTM F 836M, Grade A1 or A4).

PART 3 - EXECUTION

3.1 INSTALLATION, GENERAL

A. Framing Standard: Comply with AF&PA's WCD 1, "Details for Conventional Wood Frame Construction," unless otherwise indicated.

B. Do not splice structural members between supports unless otherwise indicated.

C. Provide blocking and framing as indicated and as required to support facing materials, fixtures, specialty items, and trim.

D. Securely attach carpentry work to substrate by anchoring and fastening as indicated, complying with the following:

1. NES NER-272 for power-driven fasteners.
2. Table 2304.9.1, "Fastening Schedule," in ICC's International Building Code.
3. Table R602.3(1), "Fastener Schedule for Structural Members," and Table R602.3(2), "Alternate Attachments," in ICC's International Residential Code for One- and Two-Family Dwellings.

E. Use steel common nails unless otherwise indicated. Select fasteners of size that will not fully penetrate members where opposite side will be exposed to view or will receive finish materials. Make tight connections between members. Install fasteners without splitting wood. Drive nails snug but do not countersink nail heads unless otherwise indicated.

END OF SECTION 061053

SECTION 07920 - JOINT SEALANTS

PART 1 - GENERAL

1.1 RELATED DOCUMENTS

A. Drawings and general provisions of the Contract, including General and Supplementary Conditions and Division 1 Specification Sections, apply to this Section.

1.2 SUMMARY

A. This Section includes sealants for the following applications, including those specified by reference to this Section:

1. Interior joints in the following vertical surfaces and horizontal nontraffic surfaces:
   a. Perimeter joints between new wall surfaces and frames of interior doors, windows, and existing construction.
   b. Other joints as indicated.

2. Exterior joints in the following vertical surfaces and horizontal nontraffic surfaces:
   a. Perimeter joints between masonry or metal surfaces and frames of doors, windows,
   b. Other joints as indicated.

3. Exterior joints in paving:

B. Related Sections:

1.3 SUBMITTALS

A. Product Data: For each joint-sealant product indicated.

B. Samples for Initial Selection: Manufacturer's color charts consisting of strips of cured sealants showing the full range of colors available for each product exposed to view.

1.4 QUALITY ASSURANCE

A. Source Limitations: Obtain each type of joint sealant through one source from a single manufacturer.

1.5 DELIVERY, STORAGE, AND HANDLING

A. Deliver materials to Project site in original unopened containers or bundles with labels indicating manufacturer, product name and designation, color, expiration date, pot life, curing time, and mixing instructions for multicomponent materials.

PART 2 - PRODUCTS

2.1 PRODUCTS AND MANUFACTURERS

A. Available Products: Subject to compliance with requirements, products that may be incorporated into the Work include, but are not limited to, the products specified in the sealant schedules at the end of Part 3.

2.2 MATERIALS, GENERAL

A. Compatibility: Provide joint sealants, backings, and other related materials that are compatible with one another and with joint substrates under conditions of service and application, as demonstrated by sealant manufacturer based on testing and field experience.

B. Colors of Exposed Joint Sealants: As selected by Architect from manufacturer's full range for this characteristic.

2.3 ELASTOMERIC JOINT SEALANTS

A. Elastomeric Sealant Standard: Comply with ASTM C 920 and other requirements indicated for each liquid-applied chemically curing sealant in the Elastomeric Joint-Sealant Schedule at the end of Part 3, including those referencing ASTM C 920 classifications for type, grade, class, and uses.

2.4 LATEX JOINT SEALANTS

A. Latex Sealant Standard: Comply with ASTM C 834 for each product of this description indicated in the Latex Joint-Sealant Schedule at the end of Part 3.

2.5 JOINT-SEALANT BACKING

A. General: Provide sealant backings of material and type that are nonstaining; are compatible with joint substrates, sealants, primers, and other joint fillers; and are approved for applications indicated by sealant manufacturer based on field experience and laboratory testing.

B. Cylindrical Sealant Backings: ASTM C 1330, of type indicated below and of size and density to control sealant depth and otherwise contribute to producing optimum sealant performance:

1. Type C: Closed-cell material with a surface skin.

C. Bond-Breaker Tape: Polyethylene tape or other plastic tape recommended by sealant manufacturer for preventing sealant from adhering to rigid, inflexible joint-filler materials or

joint surfaces at back of joint where such adhesion would result in sealant failure. Provide self-adhesive tape where applicable.

2.6 MISCELLANEOUS MATERIALS

A. Primer: Material recommended by joint sealant manufacturer where required for adhesion of sealant to joint substrates indicated, as determined from preconstruction joint-sealant-substrate tests and field tests.

B. Cleaners for Nonporous Surfaces: Chemical cleaners acceptable to manufacturers of sealants and sealant backing materials, free of oily residues or other substances capable of staining or harming joint substrates and adjacent nonporous surfaces in any way, and formulated to promote optimum adhesion of sealants with joint substrates.

C. Masking Tape: Nonstaining, nonabsorbent material compatible with joint sealants and surfaces adjacent to joints.

PART 3 - EXECUTION

3.1 EXAMINATION

A. Examine joints indicated to receive joint sealants, with Installer present, for compliance with requirements for joint configuration, installation tolerances, and other conditions affecting joint-sealant performance.

B. Proceed with installation only after unsatisfactory conditions have been corrected.

3.2 PREPARATION

A. Surface Cleaning of Joints: Clean out joints immediately before installing joint sealants to comply with joint sealant manufacturer's written instructions and the following requirements:

B. Joint Priming: Prime joint substrates where recommended in writing by joint sealant manufacturer, based on preconstruction joint-sealant-substrate tests or prior experience. Apply primer to comply with joint sealant manufacturer's written instructions. Confine primers to areas of joint-sealant bond; do not allow spillage or migration onto adjoining surfaces.

C. Masking Tape: Use masking tape where required to prevent contact of sealant with adjoining surfaces that otherwise would be permanently stained or damaged by such contact or by cleaning methods required to remove sealant smears. Remove tape immediately after tooling without disturbing joint seal.

3.3 INSTALLATION OF JOINT SEALANTS

A. General: Comply with joint sealant manufacturer's written installation instructions for products and applications indicated, unless more stringent requirements apply.

B. Sealant Installation Standard: Comply with recommendations of ASTM C 1193 for use of joint sealants as applicable to materials, applications, and conditions indicated.

3.4 CLEANING

A. Clean off excess sealants or sealant smears adjacent to joints as the Work progresses by methods and with cleaning materials approved in writing by manufacturers of joint sealants and of products in which joints occur.

3.5 PROTECTION

A. Protect joint sealants during and after curing period from contact with contaminating substances and from damage resulting from construction operations or other causes so sealants are without deterioration or damage at time of Substantial Completion. If, despite such protection, damage or deterioration occurs, cut out and remove damaged or deteriorated joint sealants immediately so installations with repaired areas are indistinguishable from the original work.

3.6 ELASTOMERIC JOINT-SEALANT SCHEDULE

A. Single-Component, Nonsag, Neutral-Curing Silicone Joint Sealant: ASTM C 920, Type S, Grade NS, Class 100/50, for Use NT.

1. Products: Subject to compliance with requirements, available products that may be incorporated into the Work include, but are not limited to, the following:

   a. Dow Corning Corporation; 790
   b. GE Advanced Materials - Silicones; SilPruf LM SCS2700.
   c. Pecora Corporation; 890.
   d. Sika Corporation, Construction Products Division; SikaSil-C990.
   e. Tremco Incorporated; Spectrem 1

2. Applications: Joints at exterior and interior door frames, window frames and gypsum wallboard partitions and miscellaneous filling of joints in preparation for interior painting.

3.7 URETHANE JOINT-SEALANT SCHEDULE

A. Multicomponent, Nonsag, Traffic-Grade, Urethane Joint Sealant: ASTM C 920, Type M, Grade NS, Class 50, for Use T.

1. Products: Subject to compliance with requirements, available products that may be incorporated into the Work include, but are not limited to, the following:

   a. Polymeric Systems, Inc.; PSI-270.
   b. Tremco Incorporated; Dymeric 240 FC.

2. Applications: Joints at exterior paving.

B. Single-Component, Nonsag, Urethane Joint Sealant: ASTM C 920, Type S, Grade NS, Class 100/50, for Use NT.

1. Products: Subject to compliance with requirements, available products that may be incorporated into the Work include, but are not limited to, the following:

a. Sika Corporation, Construction Products Division; Sikaflex - 15LM.
b. Tremco Incorporated; Vulkem 921.

2. Applications: Joints at exterior masonry, cast stone, Control joints in brick and masonry.

3.8 LATEX JOINT-SEALANT SCHEDULE

A. Latex Joint Sealant: Acrylic latex or siliconized acrylic latex, ASTM C 834, Type OP, Grade NF.

1. Products: Subject to compliance with requirements, available products that may be incorporated into the Work include, but are not limited to, the following:

a. BASF Building Systems; Sonolac.
b. Bostik, Inc.; Chem-Calk 600.
c. Pecora Corporation; AC-20+.
d. Schnee-Morehead, Inc.; SM 8200.
e. Tremco Incorporated; Tremflex 834.

2. Applications: Joints at interior door frames and gypsum wallboard partitions and miscellaneous filling of joints in preparation for interior painting.

END OF SECTION 07920

SECTION 08111 - STEEL FRAMES

PART 1 - GENERAL

1.1 RELATED DOCUMENTS

A. Drawings and general provisions of the Contract, including General and Supplementary Conditions and Division 01 Specification Sections, apply to this Section.

1.2 SUMMARY

A. Section includes hollow-metal frames.

B. Related Requirements:

1. Section 08110 "Steel Doors and Frames" for hollow-metal door and frame assemblies.
2. Section 08211 "Flush Wood Doors" for wood doors installed in hollow-metal frames.

1.3 DEFINITIONS

A. Minimum Thickness: Minimum thickness of base metal without coatings according to NAAMM-HMMA 803 or SDI A250.8.

1.4 COORDINATION

A. Coordinate anchorage installation for hollow-metal frames. Furnish setting drawings, templates, and directions for installing anchorages, including sleeves, concrete inserts, anchor bolts, and items with integral anchors. Deliver such items to Project site in time for installation.

1.5 ACTION SUBMITTALS

A. Product Data: For each type of product.

1. Include construction details, material descriptions, fire-resistance ratings, and finishes.

B. LEED Submittals:

1. Product Data for Credit MR 4: For products having recycled content, documentation indicating percentages by weight of postconsumer and preconsumer recycled content. Include statement indicating cost for each product having recycled content.

C. Shop Drawings: Include the following:

1. Frame details for each frame type, including dimensioned profiles and metal thicknesses.
2. Locations of reinforcement and preparations for hardware.
3. Details of each different wall opening condition.
4. Details of anchorages, joints, field splices, and connections.
5. Details of moldings, removable stops, and glazing.

6. Details of conduit and preparations for power, signal, and control systems.

1.6 DELIVERY, STORAGE, AND HANDLING

A. Deliver hollow-metal work palletized, packaged, or crated to provide protection during transit and Project-site storage. Do not use nonvented plastic.

1. Provide additional protection to prevent damage to factory-finished units.

B. Deliver welded frames with two removable spreader bars across bottom of frames, tack welded to jambs and mullions.

C. Store hollow-metal work vertically under cover at Project site with head up. Place on minimum 4-inch-(102-mm-) high wood blocking. Provide minimum 1/4-inch (6-mm) space between each unit to permit air circulation.

PART 2 - PRODUCTS

2.1 MANUFACTURERS

A. Manufacturers: Subject to compliance with requirements, available manufacturers offering products SELECT ONE OF the following:
1. Ceco Door Products; an Assa Abloy Group company.
2. Curries Company; an Assa Abloy Group company.
3. Pioneer Industries, Inc.
4. Republic Doors and Frames.

B. Source Limitations: Obtain hollow-metal work from single source from single manufacturer.

2.2 REGULATORY REQUIREMENTS

A. Fire-Rated Assemblies: Complying with NFPA 80 and listed and labeled by a qualified testing agency acceptable to authorities having jurisdiction for fire-protection ratings[**and temperature-rise limits**] indicated, based on testing at positive pressure according to NFPA 252 or UL 10C.

1. Smoke- and Draft-Control Assemblies: Provide an assembly with gaskets listed and labeled for smoke and draft control by a qualified testing agency acceptable to authorities having jurisdiction, based on testing according to UL 1784 and installed in compliance with NFPA 105.

2.3 INTERIOR FRAMES

A. Construct interior frames to comply with the standards indicated for materials, fabrication, hardware locations, hardware reinforcement, tolerances, and clearances, and as specified.

B. Commercial Frames: NAAMM-HMMA 861..

1. Physical Performance: Level A according to SDI A250.4.
2. Materials: Uncoated steel sheet, minimum thickness of 0.053 inch (1.3 mm) for door openings 48 inches (1219 mm) or less, or window frames; minimum thickness of 0.067 inch (1.7 mm)for door openings greater than 48 inches (1219 mm).

3. Construction: Full profile welded.
4. Exposed Finish: Prime.

2.4 EXTERIOR HOLLOW-METAL FRAMES

A. Construct exterior frames to comply with the standards indicated for materials, fabrication, hardware locations, hardware reinforcement, tolerances, and clearances, and as specified.

B. Commercial Frames: NAAMM-HMMA 861..

1. Physical Performance: Level A according to SDI A250.4.
2. Materials: Metallic-coated steel sheet, minimum thickness of 0.067 inch (1.7 mm), with minimum G60 (Z180 or)A60 (ZF180) coating.
3. Construction: Full profile welded.
4. Exposed Finish: Prime.

2.5 FRAME ANCHORS

A. Jamb Anchors:

1. Stud-Wall Type: Designed to engage stud, welded to back of frames; not less than 0.042 inch (1.0 mm) thick.

B. Floor Anchors: Formed from same material as frames, minimum thickness of 0.042 inch (1.0 mm), and as follows:

1. Monolithic Concrete Slabs: Clip-type anchors, with two holes to receive fasteners.

2.6 MATERIALS

A. Recycled Content of Steel Products: Postconsumer recycled content plus one-half of preconsumer recycled content not less than 25 percent.

B. Cold-Rolled Steel Sheet: ASTM A 1008/A 1008M, Commercial Steel (CS), Type B; suitable for exposed applications.

C. Hot-Rolled Steel Sheet: ASTM A 1011/A 1011M, Commercial Steel (CS), Type B; free of scale, pitting, or surface defects; pickled and oiled.

D. Metallic-Coated Steel Sheet: ASTM A 653/A 653M, Commercial Steel (CS), Type B.

E. Frame Anchors: ASTM A 879/A 879M, Commercial Steel (CS), 04Z (12G) coating designation; mill phosphatized.

1. For anchors built into exterior walls, steel sheet complying with ASTM A 1008/A 1008M or ASTM A 1011/A 1011M, hot-dip galvanized according to ASTM A 153/A 153M, Class B.

F. Inserts, Bolts, and Fasteners: Hot-dip galvanized according to ASTM A 153/A 153M.

G. Glazing: Comply with requirements in Section 08800 "Glazing."

2.7 FABRICATION

A. Fabricate hollow-metal work to be rigid and free of defects, warp, or buckle. Accurately form metal to required sizes and profiles, with minimum radius for metal thickness. Where practical, fit and assemble units in manufacturer's plant. To ensure proper assembly at Project site, clearly identify work that cannot be permanently factory assembled before shipment.

B. Hollow-Metal Frames: Where frames are fabricated in sections due to shipping or handling limitations, provide alignment plates or angles at each joint, fabricated of same thickness metal as frames.

1. Sidelight and Transom Bar Frames: Provide closed tubular members with no visible face seams or joints, fabricated from same material as door frame. Fasten members at crossings and to jambs by butt welding.
2. Provide countersunk, flat- or oval-head exposed screws and bolts for exposed fasteners unless otherwise indicated.
3. Floor Anchors: Weld anchors to bottoms of jambs with at least four spot welds per anchor; however, for slip-on drywall frames, provide anchor clips or countersunk holes at bottoms of jambs.
4. Jamb Anchors: Provide number and spacing of anchors as follows:

    a. Stud-Wall Type: Locate anchors not more than 18 inches (457 mm) from top and bottom of frame. Space anchors not more than 32 inches (813 mm) o.c. and as follows:

        1) Three anchors per jamb up to 60 inches (1524 mm) high.
        2) Four anchors per jamb from 60 to 90 inches (1524 to 2286 mm) high.
        3) Five anchors per jamb from 90 to 96 inches (2286 to 2438 mm) high.
        4) Five anchors per jamb plus one additional anchor per jamb for each 24 inches (610 mm) or fraction thereof above 96 inches (2438 mm) high.

5. Head Anchors: Two anchors per head for frames more than 42 inches (1067 mm) wide and mounted in metal-stud partitions.
6. Door Silencers: Except on weather-stripped frames, drill stops to receive door silencers as follows. Keep holes clear during construction.

    a. Single-Door Frames: Drill stop in strike jamb to receive three door silencers.
    b. Double-Door Frames: Drill stop in head jamb to receive two door silencers.

C. Hardware Preparation: Factory prepare hollow-metal work to receive templated mortised hardware; include cutouts, reinforcement, mortising, drilling, and tapping according to SDI A250.6, the Door Hardware Schedule, and templates.

1. Reinforce frames to receive nontemplated, mortised, and surface-mounted hardware.
2. Comply with applicable requirements in SDI A250.6 and BHMA A156.115 for preparation of hollow-metal work for hardware.

D. Stops and Moldings: Provide stops and moldings around glazed lites and louvers where indicated. Form corners of stops and moldings with butted or mitered hairline joints.

1. Single Glazed Lites: Provide fixed stops and moldings welded on secure side of hollow-metal work.
2. Multiple Glazed Lites: Provide fixed and removable stops and moldings so that each glazed lite is capable of being removed independently.
3. Provide fixed frame moldings on outside of exterior and on secure side of interior frames.
4. Provide loose stops and moldings on inside of hollow-metal work.

5. Coordinate rabbet width between fixed and removable stops with glazing and installation types indicated.

2.8 STEEL FINISHES

A. Prime Finish: Clean, pretreat, and apply manufacturer's standard primer.

1. Shop Primer: Manufacturer's standard, fast-curing, lead- and chromate-free primer complying with SDI A250.10; recommended by primer manufacturer for substrate; compatible with substrate and field-applied coatings despite prolonged exposure.

B. Factory Finish: Clean, pretreat, and apply manufacturer's standard two-coat, baked-on finish consisting of prime coat and thermosetting topcoat, complying with SDI A250.3.

1. Color and Gloss: Match Architect's sample.

2.9 ACCESSORIES

A. Mullions and Transom Bars: Join to adjacent members by welding or rigid mechanical anchors.

PART 3 - EXECUTION

3.1 EXAMINATION

A. Examine substrates, areas, and conditions, with Installer present, for compliance with requirements for installation tolerances and other conditions affecting performance of the Work.

B. Examine roughing-in for embedded and built-in anchors to verify actual locations before frame installation.

C. Prepare written report, endorsed by Installer, listing conditions detrimental to performance of the Work.

D. Proceed with installation only after unsatisfactory conditions have been corrected.

3.2 PREPARATION

A. Remove welded-in shipping spreaders installed at factory. Restore exposed finish by grinding, filling, and dressing, as required to make repaired area smooth, flush, and invisible on exposed faces.

B. Drill and tap frames to receive nontemplated, mortised, and surface-mounted hardware.

3.3 INSTALLATION

A. General: Install hollow-metal work plumb, rigid, properly aligned, and securely fastened in place. Comply with Drawings and manufacturer's written instructions.

B. Hollow-Metal Frames: Install hollow-metal frames of size and profile indicated. Comply with SDI A250.11 or NAAMM-HMMA 840 as required by standards specified.

1. Set frames accurately in position; plumbed, aligned, and braced securely until permanent anchors are set. After wall construction is complete, remove temporary braces, leaving surfaces smooth and undamaged.

    a. At fire-rated openings, install frames according to NFPA 80.
    b. Where frames are fabricated in sections because of shipping or handling limitations, field splice at approved locations by welding face joint continuously; grind, fill, dress, and make splice smooth, flush, and invisible on exposed faces.
    c. Install frames with removable stops located on secure side of opening.
    d. Install door silencers in frames before grouting.
    e. Remove temporary braces necessary for installation only after frames have been properly set and secured.
    f. Check plumb, square, and twist of frames as walls are constructed. Shim as necessary to comply with installation tolerances.

2. Floor Anchors: Provide floor anchors for each jamb and mullion that extends to floor, and secure with postinstalled expansion anchors.

    a. Floor anchors may be set with power-actuated fasteners instead of postinstalled expansion anchors if so indicated and approved on Shop Drawings.
3. In-Place Metal or Wood-Stud Partitions: Secure slip-on drywall frames in place according to manufacturer's written instructions.
4. Installation Tolerances: Adjust hollow-metal door frames for squareness, alignment, twist, and plumb to the following tolerances:

    a. Squareness: Plus or minus 1/16 inch (1.6 mm), measured at door rabbet on a line 90 degrees from jamb perpendicular to frame head.
    b. Alignment: Plus or minus 1/16 inch (1.6 mm), measured at jambs on a horizontal line parallel to plane of wall.
    c. Twist: Plus or minus 1/16 inch (1.6 mm), measured at opposite face corners of jambs on parallel lines, and perpendicular to plane of wall.
    d. Plumbness: Plus or minus 1/16 inch (1.6 mm), measured at jambs at floor.

C. Glazing: Comply with installation requirements in Section 08800 "Glazing" and with hollow-metal manufacturer's written instructions.

1. Secure stops with countersunk flat- or oval-head machine screws spaced uniformly not more than 9 inches (230 mm) o.c. and not more than 2 inches (51 mm) o.c. from each corner.

3.4 ADJUSTING AND CLEANING

A. Final Adjustments: Remove and replace defective work, including hollow-metal work that is warped, bowed, or otherwise unacceptable.

B. Remove grout and other bonding material from hollow-metal work immediately after installation.

C. Prime-Coat Touchup: Immediately after erection, sand smooth rusted or damaged areas of prime coat and apply touchup of compatible air-drying, rust-inhibitive primer.

D. Metallic-Coated Surface Touchup: Clean abraded areas and repair with galvanizing repair paint according to manufacturer's written instructions.

E. Factory-Finish Touchup: Clean abraded areas and repair with same material used for factory finish according to manufacturer's written instructions.

F. Touchup Painting: Cleaning and touchup painting of abraded areas of paint are specified in painting Sections.

END OF SECTION 08111

SECTION 08211 - FLUSH WOOD DOORS

PART 1 - GENERAL

1.1 RELATED DOCUMENTS

A. Drawings and general provisions of the Contract, including General and Supplementary Conditions and Division 01 Specification Sections, apply to this Section.

1.2 SUMMARY

A. Section Includes:

1. Solid-core doors with wood-veneer or MDO faces.
2. Factory finishing flush wood doors.
3. Factory fitting flush wood doors to frames and factory machining for hardware.

B. Related Requirements:

1. Section 0811 "Steel Frames" for steel door frames to receive wood doors.

1.3 ACTION SUBMITTALS

A. Product Data: For each type of door. Include details of core and edge construction , louvers, and trim for openings. Include factory-finishing specifications.

B. LEED Submittals:

1. Product Certificates for Credit MR 5: For products and materials required to comply with requirements for regional materials, certificates indicating location of material manufacturer and point of extraction, harvest, or recovery for each raw material. Include statement indicating distance to Project, cost for each regional material, and fraction by weight that is considered regional.
2. Certificates for Credit MR 6: Chain-of-custody certificates indicating that flush wood doors comply with forest certification requirements. Include statement indicating cost for each certified wood product.
3. Product Data for Credit IEQ 4.4: For adhesives and composite wood products, documentation indicating that product contains no urea formaldehyde.
4. Laboratory Test Reports for Credit IEQ 4.1: For adhesives, documentation indicating that products comply with the testing and product requirements of the California Department of Health Services' "Standard Practice for the Testing of Volatile Organic Emissions from Various Sources Using Small-Scale Environmental Chambers."
5. Laboratory Test Reports for Credit IEQ 4.2: For paints and coatings, documentation indicating that products comply with the testing and product requirements of the California Department of Health Services' "Standard Practice for the Testing of Volatile Organic Emissions from Various Sources Using Small-Scale Environmental Chambers."
6. Laboratory Test Reports for Credit IEQ 4.4: For composite wood products, documentation indicating that products comply with the testing and product requirements of the California Department of Health Services' "Standard Practice for the Testing of Volatile Organic Emissions from Various Sources Using Small-Scale Environmental Chambers."

C. Shop Drawings: Indicate location, size, and hand of each door; elevation of each kind of door; construction details not covered in Product Data; and the following:

1. Dimensions and locations of blocking.
2. Dimensions and locations of mortises and holes for hardware.
3. Dimensions and locations of cutouts.
4. Undercuts.
5. Doors to be factory finished and finish requirements.
6. Fire-protection ratings for fire-rated doors.

1.4 QUALITY ASSURANCE

A. Manufacturer Qualifications: A qualified manufacturer that is certified for chain of custody by an FSC-accredited certification body and is a certified participant in AWI's Quality Certification Program .

B. Vendor Qualifications: A vendor that is certified for chain of custody by an FSC-accredited certification body.

1.5 DELIVERY, STORAGE, AND HANDLING

A. Comply with requirements of referenced standard and manufacturer's written instructions.

B. Package doors individually in plastic bags or cardboard cartons.

C. Mark each door on top and bottom rail with opening number used on Shop Drawings.

1.6 FIELD CONDITIONS

A. Environmental Limitations: Do not deliver or install doors until spaces are enclosed and weathertight, wet work in spaces is complete and dry, and HVAC system is operating and maintaining ambient temperature and humidity conditions at occupancy levels during remainder of construction period.

1.7 WARRANTY

A. Special Warranty: Manufacturer agrees to repair or replace doors that fail in materials or workmanship within specified warranty period.

1. Failures include, but are not limited to, the following:

   a. Warping (bow, cup, or twist) more than 1/4 inch (6.4 mm) in a 42-by-84-inch (1067-by-2134-mm) section.
   b. Telegraphing of core construction in face veneers exceeding 0.01 inch in a 3-inch (0.25 mm in a 76.2-mm) span.

2. Warranty shall also include installation and finishing that may be required due to repair or replacement of defective doors.
3. Warranty Period for Solid-Core Exterior Doors: Five years from date of Substantial Completion.
4. Warranty Period for Solid-Core Interior Doors: Life of installation.

PART 2 - PRODUCTS

2.1 MANUFACTURERS

A. Manufacturers: Subject to compliance with requirements, available manufacturers offering products that may be incorporated into the Work include, but are not limited to, the following:

1. Algoma Hardwoods, Inc.
2. Ampco.
3. Chappell Door Co.
4. Eggers Industries.
5. General Veneer Manufacturing Co.
6. Graham Wood Doors; an Assa Abloy Group company.
7. Haley Brothers, Inc.
8. Ipik Door Company.
9. Lambton Doors.
10. Marlite.
11. Marshfield Door Systems, Inc.
12. Mohawk Doors; a Masonite company.
13. Oshkosh Door Company.
14. Poncraft Door Company.
15. Vancouver Door Company.
16. VT Industries, Inc.

.

B. Source Limitations: Obtain flush wood doors from single manufacturer.

2.2 FLUSH WOOD DOORS, GENERAL

A. Quality Standard: In addition to requirements specified, comply with AWI's, AWMAC's, and WI's "Architectural Woodwork Standards."

B. Regional Materials: Flush wood doors shall be manufactured within 500 miles (800 km) of Project site from materials that have been extracted, harvested, or recovered, as well as manufactured, within 500 miles (800 km) of Project site.

C. Low-Emitting Materials: Fabricate doors with adhesives and composite wood products that do not contain urea formaldehyde.

D. Fire-Rated Wood Doors: Doors complying with NFPA 80 that are listed and labeled by a qualified testing agency, for fire-protection ratings indicated, based on testing at positive pressure according to NFPA 252 or UL 10C.

1. Cores: Provide core specified or mineral core as needed to provide fire-protection rating indicated.
2. Edge Construction: Provide edge construction with intumescent seals concealed by outer stile. Comply with specified requirements for exposed edges.
3. Pairs: Provide fire-retardant stiles that are listed and labeled for applications indicated without formed-steel edges and astragals. Provide stiles with concealed intumescent seals. Comply with specified requirements for exposed edges.
4. Pairs: Provide formed-steel edges and astragals with intumescent seals.

    a. Finish steel edges and astragals with baked enamel.
    b. Finish steel edges and astragals to match door hardware (locksets or exit devices).

E. Structural-Composite-Lumber-Core Doors:

1. Structural Composite Lumber: WDMA I.S.10.

    a. Screw Withdrawal, Face: 700 lbf (3100 N).
    b. Screw Withdrawal, Edge: 400 lbf (1780 N).

F. Mineral-Core Doors:

1. Core: Noncombustible mineral product complying with requirements of referenced quality standard and testing and inspecting agency for fire-protection rating indicated.
2. Blocking: Provide composite blocking with improved screw-holding capability approved for use in doors of fire-protection ratings indicated as needed to eliminate through-bolting hardware.

3. Edge Construction: At hinge stiles, provide laminated-edge construction with improved screw-holding capability and split resistance. Comply with specified requirements for exposed edges.

    a. Screw-Holding Capability: 475 lbf (2110 N) per WDMA T.M.-10.

2.3 DOORS FOR OPAQUE FINISH

A. Exterior Solid-Core Doors:

1. Grade: Premium .
2. Faces: MDO or any closed-grain hardwood of mill option.

    a. Apply MDO to standard-thickness, closed-grain, hardwood face veneers.

3. Exposed Vertical and Top Edges: Any closed-grain hardwood.
4. Core: Either glued wood stave or structural composite lumber.
5. Construction: Five or seven plies. Stiles and rails are bonded to core, then entire unit is abrasive planed before veneering.
6. Adhesives: Type I per WDMA T.M.-6.

B. Interior Solid-Core Doors :

1. Grade: Premium .
2. Faces: MDO or any closed-grain hardwood of mill option .

    a. Apply MDO to standard-thickness, closed-grain, hardwood face veneers.

3. Exposed Vertical and Top Edges: Any closed-grain hardwood.
4. Core: Either glued wood stave or structural composite lumber .
5. Construction: Five or seven plies. Stiles and rails are bonded to core, then entire unit is abrasive planed before veneering.

2.4 LIGHT FRAMES AND LOUVERS

A. Wood Beads for Light Openings in Wood Doors: Provide manufacturer's standard wood beads unless otherwise indicated.

1. Wood Species: Any closed-grain hardwood.
2. Profile: Manufacturer's standard shape.
3. At wood-core doors with 20-minute fire-protection ratings, provide wood beads and metal glazing clips approved for such use.

B. Metal Frames for Light Openings in Fire-Rated Doors: Manufacturer's standard frame formed of 0.048-inch- (1.2-mm-) thick, cold-rolled steel sheet; with baked-enamel- or powder-coated finish; and approved for use in doors of fire-protection rating indicated.

2.5 FABRICATION

A. Factory fit doors to suit frame-opening sizes indicated. Comply with clearance requirements of referenced quality standard for fitting unless otherwise indicated.

1. Comply with NFPA 80 requirements for fire-rated doors.

B. Factory machine doors for hardware that is not surface applied. Locate hardware to comply with DHI-WDHS-3. Comply with final hardware schedules, door frame Shop Drawings, BHMA-156.115-W, and hardware templates.

1. Coordinate with hardware mortises in metal frames to verify dimensions and alignment before factory machining.
2. Metal Astragals: Factory machine astragals and formed-steel edges for hardware for pairs of fire-rated doors.

C. Transom and Side Panels: Fabricate matching panels with same construction, exposed surfaces, and finish as specified for associated doors. Finish bottom edges of transoms and top edges of rabbeted doors same as door stiles.

1. Fabricate door and transom panels with full-width, solid-lumber[**, rabbeted,**] meeting rails. Provide factory-installed spring bolts for concealed attachment into jambs of metal door frames.

D. Openings: Factory cut and trim openings through doors.

1. Light Openings: Trim openings with moldings of material and profile indicated.
2. Glazing: Factory install glazing in doors indicated to be factory finished. Comply with applicable requirements in Section 08800 "Glazing."
3. Louvers: Factory install louvers in prepared openings.

E. Exterior Doors: Factory treat exterior doors with water repellent after fabrication has been completed but before factory finishing.

1. Flash top of outswinging doors with manufacturer's standard metal flashing.

2.6 FACTORY FINISHING

A. General: Comply with referenced quality standard for factory finishing. Complete fabrication, including fitting doors for openings and machining for hardware that is not surface applied, before finishing.

1. Finish faces, all four edges, edges of cutouts, and mortises. Stains and fillers may be omitted on top and bottom edges, edges of cutouts, and mortises.

B. Factory finish doors.

C. Use only paints and coatings that comply with the testing and product requirements of the California Department of Health Services' "Standard Practice for the Testing of Volatile Organic Emissions from Various Sources Using Small-Scale Environmental Chambers."

D. Opaque Finish:

1. Grade: Premium.
2. Finish: AWI's, AWMAC's, and WI's "Architectural Woodwork Standards" System 5, conversion varnish System 9, UV curable, acrylated epoxy, polyester, or urethane System 10, UV curable, water based or System 11, catalyzed polyurethane.
3. Color: Match Architect's sample.
4. Sheen: To be selected by architect.

PART 3 - EXECUTION

3.1 EXAMINATION

A. Examine doors and installed door frames, with Installer present, before hanging doors.

1. Verify that installed frames comply with indicated requirements for type, size, location, and swing characteristics and have been installed with level heads and plumb jambs.
2. Reject doors with defects.

B. Proceed with installation only after unsatisfactory conditions have been corrected.

3.2 INSTALLATION

A. Hardware: For installation, see Section 08710 "Door Hardware."

B. Installation Instructions: Install doors to comply with manufacturer's written instructions and referenced quality standard, and as indicated.

1. Install fire-rated doors according to NFPA 80.

C. Factory-Fitted Doors: Align in frames for uniform clearance at each edge.

D. Factory-Finished Doors: Restore finish before installation if fitting or machining is required at Project site.

3.3 ADJUSTING

A. Operation: Rehang or replace doors that do not swing or operate freely.

B. Finished Doors: Replace doors that are damaged or that do not comply with requirements. Doors may be repaired or refinished if Work complies with requirements and shows no evidence of repair or refinishing.

END OF SECTION 08211

SECTION 08411 - ALUMINUM-FRAMED ENTRANCES AND STOREFRONTS

PART 1 - GENERAL

1.1 RELATED DOCUMENTS

A. Drawings and general provisions of the Contract, including General and Supplementary Conditions and Division 01 Specification Sections, apply to this Section.

1.2 SUMMARY

A. Section Includes:

1. Exterior and interior storefront framing.
2. Exterior and interior manual-swing entrance doors.

1.3 ACTION SUBMITTALS

A. Product Data: For each type of product.

1. Include construction details, material descriptions, dimensions of individual components and profiles, and finishes.

B. Shop Drawings: For aluminum-framed entrances and storefronts. Include plans, elevations, sections, full-size details, and attachments to other work.

1. Include details of provisions for assembly expansion and contraction and for draining moisture occurring within the assembly to the exterior.
2. Include full-size isometric details of each vertical-to-horizontal intersection of aluminum-framed entrances and storefronts, showing the following:

a. Joinery, including concealed welds.
b. Anchorage.
c. Expansion provisions.
d. Glazing.
e. Flashing and drainage.

3. Show connection to and continuity with adjacent thermal, weather, air, and vapor barriers.

C. Samples for Initial Selection: For units with factory-applied color finishes.

1.4 INFORMATIONAL SUBMITTALS

A. Energy Performance Certificates: For aluminum-framed entrances and storefronts, accessories, and components, from manufacturer.

1. Basis for Certification: NFRC-certified energy performance values for each aluminum-framed entrance and storefront.

B. Sample Warranties: For special warranties.

1.5 CLOSEOUT SUBMITTALS

A. Maintenance Data: For aluminum-framed entrances and storefronts to include in maintenance manuals.

1.6 QUALITY ASSURANCE

A. Installer Qualifications: An entity that employs installers and supervisors who are trained and approved by manufacturer.

B. Warranty: Manufacturer and Installer agree to repair or replace components of aluminum-framed entrances and storefronts that do not comply with requirements or that fail in materials or workmanship within specified warranty period.

1. Warranty Period: 10 years from date of Substantial Completion.

C. Finish Warranty: Standard form in which manufacturer agrees to repair finishes or replace aluminum that shows evidence of deterioration of factory-applied finishes within specified warranty period.

1. Warranty Period: 20 years from date of Substantial Completion.

PART 2 - PRODUCTS

2.1 PERFORMANCE REQUIREMENTS

A. General Performance: Comply with performance requirements specified, as determined by testing of aluminum-framed entrances and storefronts representing those indicated for this Project without failure due to defective manufacture, fabrication, installation, or other defects in construction.

1. Aluminum-framed entrances and storefronts shall withstand movements of supporting structure including, but not limited to, story drift, twist, column shortening, long-term creep, and deflection from uniformly distributed and concentrated live loads.
2. Failure also includes the following:

a. Thermal stresses transferring to building structure.
b. Glass breakage.
c. Noise or vibration created by wind and thermal and structural movements.
d. Loosening or weakening of fasteners, attachments, and other components.
e. Failure of operating units.

B. Structural Loads:

1. Wind Loads: As indicated on Drawings.

C. Structural: Test according to ASTM E 330 as follows:

1. When tested at 150 percent of positive and negative wind-load design pressures, assemblies, including anchorage, do not evidence material failures, structural distress, or permanent deformation of main framing members exceeding 0.2 percent of span.
2. Test Durations: As required by design wind velocity, but not less than 10 seconds.

D. Air Infiltration: Test according to ASTM E 283 for infiltration as follows:

1. Fixed Framing and Glass Area:

   a. Maximum air leakage of 0.06 cfm/sq. ft. at a static-air-pressure differential of 6.24 lbf/sq. ft.

2. Entrance Doors:
   a. Single Doors: Maximum air leakage of 0.5 cfm/sq. ft. at a static-air-pressure differential of 1.57 lbf/sq. ft.

E. Water Penetration under Static Pressure: Test according to ASTM E 331 as follows:

1. No evidence of water penetration through fixed glazing and framing areas when tested according to a minimum static-air-pressure differential of 20 percent of positive wind-load design pressure, but not less than 6.24 lbf/sq. ft.

F. Energy Performance: Certify and label energy performance according to NFRC as follows:

1. Thermal Transmittance (U-factor): Fixed glazing and framing areas shall have U-factor of not more than 0.45 Btu/sq. ft. x h x deg F as determined according to NFRC 100.
2. Solar Heat Gain Coefficient: Fixed glazing and framing areas shall have a solar heat gain coefficient of no greater than 0.32 as determined according to NFRC 200.
3. Condensation Resistance: Fixed glazing and framing areas shall have an NFRC-certified condensation resistance rating of no less than 35 as determined according to NFRC 500.

G. Thermal Movements: Allow for thermal movements resulting from ambient and surface temperature changes:

1. Temperature Change: 120 deg F, ambient, material surfaces.
2. Thermal Cycling: No buckling; stress on glass; sealant failure; excess stress on framing, anchors, and fasteners; or reduction of performance when tested according to AAMA 501.5.

   a. High Exterior Ambient-Air Temperature: That which produces an exterior metal-surface temperature of 120 deg F.
   b. Low Exterior Ambient-Air Temperature: 0 deg F.
   c. Interior Ambient-Air Temperature: 75 deg F.

2.2 MANUFACTURERS

A. Manufacturers: Subject to compliance with requirements, provide products by one of the following:

1. Kawneer
2. Efco Corporation
3. Tubelite Inc.

2.3 FRAMING

A. Framing Members: Manufacturer's extruded- or formed-aluminum framing members of thickness required and reinforced as required to support imposed loads.

1. Construction: Thermally broken (exterior) and Nonthermal (interior).
2. Glazing System: Retained mechanically with gaskets on four sides.
3. Glazing Plane: Front (exterior) Center (interior).
4. Finish: High-performance organic finish. (Match existing window color and finish)
5. Fabrication Method: Field-fabricated stick system.

B. Backer Plates: Manufacturer's standard, continuous backer plates for framing members, if not integral, where framing abuts adjacent construction.

C. Brackets and Reinforcements: Manufacturer's standard high-strength aluminum with nonstaining, nonferrous shims for aligning system components.

D. Materials:

1. Aluminum: Alloy and temper recommended by manufacturer for type of use and finish indicated.

a. Sheet and Plate: ASTM B 209
b. Extruded Bars, Rods, Profiles, and Tubes: ASTM B 221
c. Extruded Structural Pipe and Tubes: ASTM B 429/B 429M.
d. Structural Profiles: ASTM B 308/B 308M.

2.4 ENTRANCE DOOR SYSTEMS

A. Entrance Doors: Manufacturer's standard glazed entrance doors for manual-swing operation.

1. Door Construction: 1-3/4-inch (44.5-mm) overall thickness, with minimum 0.125-inch-(3.2-mm-) thick, extruded-aluminum tubular rail and stile members. Mechanically fasten corners with reinforcing brackets that are deeply penetrated and fillet welded or that incorporate concealed tie rods.
2. Door Design: Medium stile; 3-1/2-inch nominal width.
3. Glazing Stops and Gaskets: Square snap-on, extruded-aluminum stops and preformed gaskets.

2.5 ENTRANCE DOOR HARDWARE

A. Entrance Door Hardware: Hardware not specified in this Section is specified in Section 08710 "Door Hardware."

2.6 GLAZING

A. Glazing: Comply with Section 088000 "Glazing."

B. Glazing Gaskets: Manufacturer's standard sealed-corner pressure-glazing system of black, resilient elastomeric glazing gaskets, setting blocks, and shims or spacers.

C. Glazing Sealants: As recommended by manufacturer.

D. Sealants used inside the weatherproofing system shall have a VOC content of 250 g/L.

2.7 ACCESSORIES

A. Fasteners and Accessories: Manufacturer's standard corrosion-resistant, nonstaining, nonbleeding fasteners and accessories compatible with adjacent materials.

1. Use self-locking devices where fasteners are subject to loosening or turning out from thermal and structural movements, wind loads, or vibration.
2. Reinforce members as required to receive fastener threads.
3. Use exposed fasteners with countersunk Phillips screw heads**,** finished to match framing system.

B. Anchors: Three-way adjustable anchors with minimum adjustment of 1 inch that accommodate fabrication and installation tolerances in material and finish compatible with adjoining materials and recommended by manufacturer.

1. Concrete and Masonry Inserts: Hot-dip galvanized cast-iron, malleable-iron, or steel inserts complying with ASTM A 123/A 123M or ASTM A 153/A 153M requirements.

C. Concealed Flashing: Manufacturer's standard corrosion-resistant, nonstaining, nonbleeding flashing compatible with adjacent materials.

D. Bituminous Paint: Cold-applied asphalt-mastic paint complying with SSPC-Paint 12 requirements except containing no asbestos, formulated for 30-mil thickness per coat.

2.8 FABRICATION

A. Form or extrude aluminum shapes before finishing.

B. Weld in concealed locations to greatest extent possible to minimize distortion or discoloration of finish. Remove weld spatter and welding oxides from exposed surfaces by descaling or grinding.

C. Fabricate components that, when assembled, have the following characteristics:

1. Profiles that are sharp, straight, and free of defects or deformations.
2. Accurately fitted joints with ends coped or mitered.
3. Physical and thermal isolation of glazing from framing members.
4. Accommodations for thermal and mechanical movements of glazing and framing to maintain required glazing edge clearances.
5. Provisions for field replacement of glazing from interior for vision glass and exterior for spandrel glazing or metal panels.
6. Fasteners, anchors, and connection devices that are concealed from view to greatest extent possible.

D. Mechanically Glazed Framing Members: Fabricate for flush glazing without projecting stops.

E. Structural-Sealant-Glazed Framing Members: Include accommodations for using temporary support device to retain glazing in place while structural sealant cures.

F. Storefront Framing: Fabricate components for assembly using shear-block system or screw-spline system.

G. Entrance Door Frames: Reinforce as required to support loads imposed by door operation and for installing entrance door hardware.

1. At exterior doors, provide compression weather stripping at fixed stops.

H. Entrance Doors: Reinforce doors as required for installing entrance door hardware.

1. At pairs of exterior doors, provide sliding-type weather stripping retained in adjustable strip and mortised into door edge.
2. At exterior doors, provide weather sweeps applied to door bottoms.

I. Entrance Door Hardware Installation: Factory install entrance door hardware to the greatest extent possible. Cut, drill, and tap for factory-installed entrance door hardware before applying finishes.

J. After fabrication, clearly mark components to identify their locations in Project according to Shop Drawings.

2.9 ALUMINUM FINISHES

A. High-Performance Organic Finish: Three-coat fluoropolymer finish complying with AAMA 2605. . Prepare, pretreat, and apply coating to exposed metal surfaces to comply with coating and resin manufacturers' written instructions.

1. Color and Gloss: Match existing window system.

PART 3 - EXECUTION

3.1 EXAMINATION

A. Examine areas, with Installer present, for compliance with requirements for installation tolerances and other conditions affecting performance of the Work.

B. Proceed with installation only after unsatisfactory conditions have been corrected.

3.2 PREPARATION

A. Prepare surfaces that are in contact with structural sealant according to sealant manufacturer's written instructions to ensure compatibility and adhesion. Preparation includes, but is not limited to, cleaning and priming surfaces.

3.3 INSTALLATION

A. General:

1. Comply with manufacturer's written instructions.
2. Do not install damaged components.
3. Fit joints to produce hairline joints free of burrs and distortion.
4. Rigidly secure nonmovement joints.
5. Install anchors with separators and isolators to prevent metal corrosion and electrolytic deterioration and to prevent impeding movement of moving joints.
6. Seal perimeter and other joints watertight unless otherwise indicated.

B. Metal Protection:

1. Where aluminum is in contact with dissimilar metals, protect against galvanic action by painting contact surfaces with materials recommended by manufacturer for this purpose or by installing nonconductive spacers.
2. Where aluminum is in contact with concrete or masonry, protect against corrosion by painting contact surfaces with bituminous paint.

C. Set continuous sill members and flashing in full sealant bed as specified in Section 079200 "Joint Sealants" to produce weathertight installation.

D. Install components plumb and true in alignment with established lines and grades.

E. Install operable units level and plumb, securely anchored, and without distortion. Adjust weather-stripping contact and hardware movement to produce proper operation.

F. Install glazing per manufacturers recommendations.

G. Entrance Doors: Install doors to produce smooth operation and tight fit at contact points.

1. Exterior Doors: Install to produce weathertight enclosure and tight fit at weather stripping.

2. Field-Installed Entrance Door Hardware: Install surface-mounted entrance door hardware according to entrance door hardware manufacturers' written instructions using concealed fasteners to greatest extent possible.

3.4 ERECTION TOLERANCES

A. Erection Tolerances: Install aluminum-framed entrances and storefronts to comply with the following maximum tolerances:

1. Plumb: 1/8 inch in 10 feet.
2. Level: 1/8 inch in 20 feet.

END OF SECTION 084113

SECTION 08710 – DOOR HARDWARE

PART 1 - GENERAL

1.1 RELATED DOCUMENTS

A. Drawings and general provisions of the Contract, including General and Supplementary Conditions and Division 01 Specification Sections, apply to this Section.

1.2 SUMMARY

A. Section includes:

1. Mechanical door hardware for the following:

a. Swinging doors.

B. Related Sections:

1. Division 07 Section “Joint Sealants” for sealant requirements applicable to threshold installation under the work of this section.

1.3 REFERENCES

A. Applicable state and local building codes and standards.

B. Fire/Life Safety

1. NFPA - National Fire Protection Association

a. NFPA 80 - Standard for Fire Doors and Fire Windows
b. NFPA 101 - Life Safety Code
c. NFPA 105 - Smoke and Draft Control Door Assemblies

2. State Fire Safety Code.

C. UL - Underwriters Laboratories

1. UL 10B - Fire Test of Door Assemblies
2. UL 10C - Positive Pressure Test of Fire Door Assemblies
3. UL 1784 - Air Leakage Tests of Door Assemblies
4. UL 305 - Panic Hardware

D. Accessibility

1. ADA - Americans with Disabilities Act .
2. Massachusetts Architectural Access Board Regulation – 521 CMR

E. DHI - Door and Hardware Institute

1. Sequence and Format for the Hardware Schedule
2. Recommended Locations for Builders Hardware

F. ANSI - American National Standards Institute

1. ANSI/BHMA A156.1 - A156.29, and ANSI A156.31 - Standards for Hardware and Specialties

1.4 SUBMITTALS

A. General:

1. Submit the following in accordance with Conditions of Contract and Division 01 requirements.
2. Advise Architect within the submittal package of incompatibility or issues which may detrimentally affect the work of this section.

B. Action Submittals:

1. Product Data: Product data including manufacturers' technical product data for each item of door hardware, installation instructions, maintenance of operating parts and finish, and other information necessary to show compliance with requirements.
2. Samples for Verification: If requested by the Architect, submit production sample or sample installations as requested of each type of exposed hardware unit in the finish indicated, and tagged with a full description for coordination with the schedule.

    a. Samples will be returned to the supplier in like-new condition. Units that are acceptable to the Architect may, after final check of operations, be incorporated into the Work, within limitations of key coordination requirements.

3. Door Hardware Schedule: Submit schedule with hardware sets in vertical format as illustrated by the Sequence of Format for the Hardware Schedule as published by the Door and Hardware Institute. Indicate complete designations of each item required for each door or opening, Include the following information:

    a. Door Index; include door number, heading number, and Architects hardware set number.
    b. Opening Lock Function Spreadsheet; list locking device and function for each opening.
    c. Type, style, function, size, and finish of each hardware item.
    d. Name and manufacturer of each item.
    e. Fastenings and other pertinent information.
    f. Location of each hardware set cross-referenced to indications on Drawings.
    g. Explanation of all abbreviations, symbols, and codes contained in schedule.
    h. Mounting locations for hardware.
    i. Door and frame sizes and materials.
    j. Name and phone number for the local manufacturer's representative for each product.

4. Key Schedule: After a keying meeting between representatives of the Owner, Architect, hardware supplier, and, if requested, the representative for the lock manufacturer, provide a keying schedule, listing the levels of keying, as well as an explanation of the key system's function, the key symbols used, and the door numbers controlled. Utilize ANSI A156.28 "Recommended Practices for Keying Systems" as a guideline for nomenclature, definitions, and approach for selecting the optimal keying system.
5. Templates: After final approval of the hardware schedule, provide templates for doors, frames and other work specified to be factory prepared for the installation of door hardware.

C. Informational Submittals:

1. Qualification Data: For Supplier, Installer and Architectural Hardware Consultant.
2. Certificates of Compliance:

    a. Upon request of Architect or Authority Having Jurisdiction certificates of compliance for fire-rated hardware and installation instructions shall be made available.
    b. Installer Training Meeting Certification: Letter of compliance, signed by Contractor, attesting to completion of installer training meeting specified in "QUALITY ASSURANCE" article, herein.

3. Product Test Reports: For compliance with accessibility requirements, based on evaluation of comprehensive tests performed by manufacturer and witnessed by a qualified testing agency, for door hardware on doors located in accessible routes.
4. Warranty: Special warranty specified in this Section.

D. Closeout Submittals

1. Operations and Maintenance Data : Provide in accordance with Division 01 and include the following:

    a. Complete information on care, maintenance, and adjustment; data on repair and replacement parts, and information on preservation of finishes.
    b. Catalog pages for each product.
    c. Name, address, and phone number of local representative for each manufacturer.
    d. Parts list for each product.
    e. Copy of final approved hardware schedule, edited to reflect conditions as-installed.
    f. Copy of final keying schedule.
    g. Copy of warranties including appropriate reference numbers for manufacturers to identify the project.

1.5 QUALITY ASSURANCE

A. Product Substitutions: For the purpose of performing the work of this section, comply with product requirements stated in Division 01 and as specified herein.

1. Where a specific manufacturer's product is named and accompanied by the words "no substitute," including make or model number or other designation, provide the product exactly as specified. (Note: Certain products have been selected for their unique characteristics and particular project suitability.)
2. Where products indicate "acceptable substitute" or "acceptable manufacturer", provide product from specified manufacturers, subject to compliance with specified requirements and "Single Source Responsibility" requirements stated herein.

B. Supplier Qualifications and Responsibilities: A recognized architectural hardware supplier that has a record of successful in-service performance for supplying door hardware similar in quantity, type, and quality to that indicated for this Project and that provides a certified Architectural Hardware Consultant (AHC) available to the Owner, Architect, and Contractor, at reasonable times during the course of the Work for consultation.

1. Warehousing Facilities: In Project's vicinity.
2. Scheduling Responsibility: Preparation of door hardware and keying schedules.

C. Installer Qualifications: Qualified tradesmen, skilled in the application of commercial grade hardware that has a record of successful in-service performance for installing door hardware similar in quantity, type, and quality to that indicated for this Project.

D. Architectural Hardware Consultant Qualifications: A person who is experienced in providing consulting services for door hardware installations that are comparable in material, design, and extent to that indicated for this Project and who can meet the following qualification requirements:

1. For door hardware, DHI-certified, Architectural Hardware Consultant (AHC).
2. Can provide installation and technical data to the Architect and other related subcontractors.
3. Can inspect and verify components are in working order upon completion of installation.

E. Single Source Responsibility: Obtain each type of door hardware from a single manufacturer.

F. Fire-Rated Door Openings: Provide door hardware for fire-rated openings that complies with NFPA 80 and requirements of authorities having jurisdiction. Provide only items of door hardware that are listed and are identical to products tested by Underwriters Laboratories, Intertek Testing Services, or other testing and inspecting organizations acceptable to the authorities having jurisdiction for use on types and sizes of doors indicated, based on testing at positive pressure and according to NFPA 252 or UL 10C and in compliance with requirements of fire-rated door and door frame labels.

G. Smoke- and Draft-Control Door Assemblies: Where smoke- and draft-control door assemblies are required, provide door hardware that meet requirements of assemblies tested according to UL 1784 and installed in compliance with NFPA 105.

1. Air Leakage Rate: Maximum air leakage of 0.3 cfm/sq. ft. (3 cu. m per minute/sq. m) at the tested pressure differential of 0.3-inch wg (75 Pa) of water.

H. Means of Egress Doors: Latches do not require more than 15 lbf (67 N) to release the latch. Locks do not require use of a key, tool, or special knowledge for operation.

I. Accessibility Requirements: For door hardware on doors in an accessible route, comply with governing accessibility regulations cited in “REFERENCES” article, herein.

1. Provide operating devices that do not require tight grasping, pinching, or twisting of the wrist and that operate with a force of not more than 5 lbf (22.2 N).
2. Comply with the following maximum opening-force requirements:

   a. Interior, Non-Fire-Rated Hinged Doors: 5 lbf (22.2 N) applied perpendicular to door.
   b. Sliding or Folding Doors: 5 lbf (22.2 N) applied parallel to door at latch.
   c. Fire Doors: Minimum opening force allowable by authorities having jurisdiction.

3. Bevel raised thresholds with a slope of not more than 1:2. Provide thresholds not more than 1/2 inch (13 mm) high.
4. Adjust door closer sweep periods so that, from an open position of 70 degrees, the door will take at least 3 seconds to move to a point 3 inches (75 mm) from the latch, measured to the leading edge of the door.

J. Keying Conference: Conduct conference at Project site to comply with requirements in Division 01.

1. Attendees: Owner, Contractor, Architect, Installer, Supplier’s Architectural Hardware Consultant.
2. Incorporate keying conference decisions into final keying schedule after reviewing door hardware keying system including, but not limited to, the following:

   a. Function of building, flow of traffic, purpose of each area, degree of security required, and plans for future expansion.
   b. Preliminary key system schematic diagram.
   c. Requirements for key control system.
   d. Address for delivery of keys.

K. Pre-installation Conference: Conduct conference at Project site .

1. Review and finalize construction schedule and verify availability of materials, Installer's personnel, equipment, and facilities needed to make progress and avoid delays.
2. Inspect and discuss preparatory work performed by other trades.
3. Review required testing, inspecting, and certifying procedures.

L. Coordination Conferences:

1. Installation Coordination Conference: Prior to hardware installation, schedule and hold a meeting for the purpose of instructing installers on proper installation and adjustment of finish hardware. Representatives of locks, exit devices, and closers shall conduct training.

a. Provide minimum 10 day notice to representatives. After training, provide letter of compliance to the Architect, indicating when the training was held and who was in attendance.

1.6 DELIVERY, STORAGE, AND HANDLING

A. Inventory door hardware on receipt and provide secure lock-up for hardware delivered to Project site.

B. Tag each item or package separately with identification coordinated with the final door hardware schedule, and include installation instructions, templates, and necessary fasteners with each item or package.

1. Each article of hardware shall be individually packaged in manufacturer’s original packaging.

C. Project Conditions:

1. Maintain manufacturer-recommended environmental conditions throughout storage and installation periods.
2. Provide secure lock-up for door hardware delivered to the Project, but not yet installed. Control handling and installation of hardware items so that completion of Work will not be delayed by hardware losses both before and after installation.

D. Protection and Damage:

1. Promptly replace products damaged during shipping with exactly the same products.
2. Handle hardware in manner to avoid damage, marring, or scratching. Correct, replace or repair products damaged during the course of the Work.
3. Protect products against malfunction due to paint, solvent, cleanser, or any chemical agent.

E. Deliver keys to manufacturer of key control system for subsequent delivery to Owner.

F. Deliver keys to Owner by registered mail or overnight package service.

1.7 COORDINATION

A. Installation Templates: Distribute for doors, frames, and other work specified to be factory prepared. Check Shop Drawings of other work to confirm that adequate provisions are made for locating and installing door hardware to comply with indicated requirements.

B. Direct shipments not permitted, unless approved by the Contractor.

1.8 WARRANTY

A. Special Warranty: Manufacturer's standard form in which manufacturer agrees to repair or replace components of door hardware that fail in materials or workmanship within specified warranty period.

1. Warranty Period: Years from date of Substantial Completion, for durations indicated.

a. Closers:
1) Mechanical: 10 years.

b. Exit Devices:
1) Mechanical: 3 years.

c. Locksets:
1) Mechanical: 3 years.

2. Warranty does not cover damage or faulty operation due to improper installation, improper use or abuse.

1.9 MAINTENANCE

A. Maintenance Tools:

1. Furnish One (1) complete set of special tools required for maintenance and adjustment of hardware, including changing of cylinders.

PART 2 - PRODUCTS

2.1 MANUFACTURERS

A. Approval of manufacturers other than those listed shall be in accordance with QUALITY ASSURANCE article, herein.

B. Approval of products from manufacturers indicated as “Acceptable Manufacturer” in the following table is contingent upon those products providing all functions and features and meeting all requirements of scheduled manufacturer’s product.

Item	Scheduled Manufacturer	Acceptable Substitute
Hinges	Stanley Works	Ives, McKinney
Flush Bolts	Rockwood	Ives, Burns
Locksets & Latches	Schlage	Sargent, Best
Exit Devices	Von Duprin	Sargent, Precision
Door Closers	LCN	Sargent
Door Trim	Rockwood	Burns
Protection Plates	Rockwood	Burns
Overhead Stops	Glynn-Johnson	Rixon, Sargent
Stops & Holders	Rockwood	Burns
Thresholds & Weatherstrip	National Guard Products	Reese, Pemko
Silencers	Glynn Johnson	Ives, Burns, Rockwood

Cylinders & Keying	Schlage	No substitutes

C. Hand of Door: Drawings show direction of slide, swing, or hand of each door leaf. Furnish each item of hardware for proper installation and operation of door movement as shown.

D. Where the hardware specified is not adaptable to the finished shape or size of the members requiring hardware, furnish suitable types having the same operation and quality as the type specified, subject to the Architect's approval.

2.2 MATERIALS

A. Fasteners

1. Provide hardware manufactured to conform to published templates, generally prepared for machine screw installation.
2. Furnish screws for installation with each hardware item. Finish exposed (exposed under any condition) screws to match hardware finish, or, if exposed in surfaces of other work, to match finish of this other work as closely as possible including "prepared for paint" surfaces to receive painted finish.
3. Provide concealed fasteners for hardware units that are exposed when door is closed except to the extent that no standard units of type specified are available with concealed fasteners. Do not use thru-bolts for installation where bolt head or nut on opposite face is exposed in other work unless their use is the only means of reinforcing the work adequately to fasten the hardware securely. Review door specification and advise Architect if thru-bolts are required.
4. Hardware shall be installed with the fasteners provided by the hardware manufacturer.

B. Provide screws, bolts, expansion shields, drop plates and other devices necessary for hardware installation.

1. Where fasteners are exposed to view: Finish to match adjacent door hardware material.

2.3 HINGES

A. Provide five-knuckle, ball bearing hinges of type, material, and height as outlined in the following guide for this specification:

1. Manufacturers:

a. Scheduled Manufacturer:. Stanley FBB Series
b. Acceptable Substitute: Ives 5BB series, McKinney TA/T4A.

B. Requirements: Provide hinges complying with the following requirements, unless otherwise scheduled.

1. 1-3/4 inch thick doors, up to and including 36 inches wide:

a. Exterior: standard weight, bronze/stainless steel, 4-1/2 inches high
b. Interior: standard weight, steel, 4-1/2 inches high

2. 1-3/4 inch thick doors over 36 inches wide:

a. Exterior: heavy weight, bronze/stainless steel, 5 inches high
b. Interior: heavy weight, steel, 5 inches high

3. 2 inches or thicker doors:

    a. Exterior: heavy weight, bronze/stainless steel, 5 inches high
    b. Interior: heavy weight, steel, 5 inches high

4. Provide three hinges per door leaf for doors 90 inches or less in height, and one additional hinge for each 30 inches of additional door height.
5. Hinge Pins: Except as otherwise indicated, provide hinge pins as follows:

    a. Steel Hinges: Steel pins
    b. Non-Ferrous Hinges: Stainless steel pins
    c. Out-Swinging Exterior Doors: Non-removable pins
    d. Out-Swinging Interior Lockable Doors: Non-removable pins
    e. Interior Non-lockable Doors: Non-rising pins

6. The width of hinges shall be 4-1/2 inches at 1-3/4 inch thick doors, and 5 inches at 2 inches or thicker doors. Adjust hinge width as required for door, frame, and/or wall conditions to allow proper degree of opening.

2.4 FLUSH BOLTS

A. Manufacturers:

1. Scheduled Manufacturer: Rockwood.
2. Acceptable Substitute: Ives, Burns.

B. Provide flush bolts with forged bronze face plates, extruded brass levers, and with wrought brass guides and strikes. Provide 12 inch steel or brass rods at doors up to 90 inches in height. Top rods at manual flush bolts for doors over 90 inches in height shall be increased by 6 inches for each additional 6 inches of door height. Provide dust-proof strikes at each bottom flush bolt.

2.5 MORTISE LOCKS

A. Manufacturer:

1. Scheduled Manufacturer: Schlage L9000 series.
2. Acceptable Substitute: Sargent 8200 series, Best 45H series.

B. Requirements:

1. Provide mortise locks certified as ANSI A156.13, Grade 1 Operational, Grade 1 Security, and manufactured from heavy gauge steel, containing components of steel with a zinc dichromate plating for corrosion resistance. Lock case shall be multi-function and field reversible for handing without opening the case. Cylinders: Refer to “KEYING” article, herein.
2. Provide locks with a standard 2-3/4 inches backset with a full 3/4 inch throw stainless steel mechanical anti-friction latchbolt. Deadbolt shall be a full 1 inch throw, constructed of stainless steel.
3. Provide standard ASA strikes unless extended lip strikes are necessary to protect trim.
4. Lever trim shall be solid brass, bronze, or stainless steel, cast or forged in the design specified, with wrought roses and external lever spring cages. Levers shall be thru-bolted to assure proper alignment, and shall have a 2-piece spindle.

    a. Lever design shall be Schlage 07A.
    b. Lever trim on the secure side of doors serving rooms considered by the authority having jurisdiction to be hazardous shall have a tactile warning.

2.6 EXIT DEVICES

A. Manufacturers:

1. Scheduled Manufacturer: Von Duprin 99/33A Series
2. Acceptable Substitute: Sargent 80 series with deadlatching, Precision Apex Series.

B. Requirements:

1. Provide exit devices tested to ANSI/BHMA A156.3 Grade 1, and UL listed for Panic Exit and/or Fire Exit Hardware. Cylinders: Refer to “KEYING” article, herein.
2. Exit devices shall be touchpad type, fabricated of brass, bronze, stainless steel, or aluminum, plated to the standard architectural finishes to match the balance of the door hardware.
3. Exit devices shall incorporate a fluid damper or other device that eliminates noise associated with exit device operation. Touchpad shall extend a minimum of one half of the door width. Touch-pad finish shall be compatible to exit device finish. Compression springs will be used in devices, latches, and outside trims or controls, tension springs also acceptable.
4. Devices to incorporate a deadlatching feature for security and/or for future addition of alarm kits and/or other electrical requirements.
5. Provide manufacturer's standard strikes.
6. Provide exit devices cut to door width and height. Locate exit devices at a height recommended by the exit device manufacturer, allowable by governing building codes, and approved by the Architect.
7. Mechanism case shall sit flush on the face of all flush doors, or spacers shall be furnished to fill gaps behind devices. Where glass trim or molding projects off the face of the door, provide glass bead kits.
8. Non-fire-rated exit devices shall have cylinder dogging.
9. Removable mullions shall be a 2 inches x 3 inches steel tube. Where scheduled, mullion shall be of a type that can be removed by use of a keyed cylinder, which is self-locking when re-installed.
10. Where lever handles are specified as outside trim for exit devices, provide heavy-duty lever trims with forged or cast escutcheon plates. Provide vandal-resistant levers that will travel to a 90-degree down position when more than 35 pounds of torque are applied, and which can easily be re-set.

    a. Lever style will match the lever style of the locksets.
    b. Lever trim on doors serving rooms considered by the authority having jurisdiction to be hazardous shall have a tactile warning.

11. Exit devices for fire rated openings shall be UL labeled fire exit hardware.

2.7 DOOR CLOSERS

A. Manufacturers:

1. Scheduled Manufacturer: LCN 4010/4110 series
2. Acceptable Substitutes: Sargent 281/281P10 series factory assembled (without PRV).

B. Requirements:

1. Provide door closers certified to ANSI/BHMA A156.4 Grade 1 requirements by a BHMA certified independent testing laboratory. Closers shall be ISO 9000 certified. Units shall be stamped with date of manufacture code.
2. Door closers shall have fully hydraulic, full rack and pinion action with a high strength cast iron cylinder, and shall utilize full complement bearings at shaft. Cylinder body shall be 1-1/2 inch diameter, and double heat-treated pinion shall be 11/16 inch diameter.

3. Provide hydraulic fluid requiring no seasonal closer adjustment for temperatures ranging from 120 degrees F to -30 degrees F. Fluid shall be fireproof and shall pass the requirements of the UL10C "positive pressure" fire test.
4. Spring power shall be continuously adjustable over the full range of closer sizes, and allow for reduced opening force as required by accessibility codes and standards. Hydraulic regulation shall be by tamper-proof, non-critical valves. Closers shall have separate adjustment for latch speed, general speed, and backcheck.
5. Provide closers with a solid forged steel main arms and factory assembled heavy-duty forged forearms for parallel arm closers.
6. Closers shall not incorporate Pressure Relief Valve (PRV) technology.
7. Closer cylinders, arms, adapter plates, and metal covers shall have a powder coating finish which has been certified to exceed 100 hours salt spray testing as described in ANSI Standard A156.4 and ASTM B117, or shall have special rust inhibitor (SRI).
8. Provide special templates, drop plates, mounting brackets, or adapters for arms as required for details, overhead stops, and other door hardware items interfering with closer mounting.
9. Mount closers on room side of corridor doors, inside of exterior doors, and stair side of stairway doors from corridors. Closers shall not be visible in corridors, lobbies and other public spaces unless approved by Architect.

2.8 DOOR TRIM

A. Manufacturers:

1. Scheduled Manufacturer: Rockwood.
2. Acceptable Substitutes (except as otherwise noted): Burns.

B. Requirements:

1. Push plates, sized as scheduled, 0.062 inch thick and beveled 4 edges.
2. Pulls of solid bar stock, style, diameter and length as scheduled.

   a. Pull scheduled as "special pull": Rockwood RM3230 in 10-inch length. No substitutions will be accepted.

3. Pull plates, sized as scheduled, 0.062 inch thick.

2.9 PROTECTION PLATES

A. Manufacturers:

1. Scheduled Manufacturer: Rockwood.
2. Acceptable Substitute: Burns.

B. Requirements:

1. Provide protection plates minimum of 0.062 inch thick as scheduled.
2. Furnish with machine or wood screws, finished to match plates.
3. Beveled edges all sides.
4. Sizes as scheduled.

2.10 OVERHEAD STOPS AND OVERHEAD STOP/HOLDERS

A. Manufacturers:

1. Scheduled Manufacturers: Glynn-Johnson.
2. Acceptable Substitutes: Rixon, Sargent

B. Requirements:

1. Provide heavy duty concealed mounted overhead stop or overhead stop/holder as specified for exterior and interior vestibule single acting doors.

2.11 DOOR STOPS AND HOLDERS

A. Manufacturers:

1. Scheduled Manufacturer: Rockwood.
2. Acceptable Substitute: Burns

B. Provide door stops for all doors in accordance with the following requirements:

1. Provide wall stops wherever possible. Provide convex type where mortise type locks are used and concave type where cylindrical type locks are used.
2. Where wall stops cannot be used, provide dome type floor stops of the proper height.
3. At any opening where a wall or floor stop cannot be used, a medium duty surface mounted overhead stop shall be used.

2.12 THRESHOLDS, SEALS, DOOR SWEEPS, AUTOMATIC DOOR BOTTOMS, AND GASKETING

A. Manufacturers:

1. Scheduled Manufacturer: National Guard.
2. Acceptable Substitutes: Reese, Pemko.

B. Requirements:

1. Provide thresholds, weatherstripping (including door sweeps, seals, astragals) and gasketing systems (including smoke, sound, and light) as specified and per architectural details. Match finish of other items as closely as possible. Size of thresholds shall be as follows:

   a. Saddle Thresholds – 1/4 inch high x jamb width x door width

2. Provide door sweeps, seals, astragals, and auto door bottoms only of type where resilient or flexible seal strip is easily replaceable and readily available.

2.13 SILENCERS

A. Manufacturers:

1. Scheduled Manufacturer: Glynn-Johnson.
2. Acceptable Substitutions: Ives, Burns, Rockwood.

B. Requirements:

1. Provide "Push-in" type silencers for each hollow metal or wood frame. Provide three for each single frame and two for each pair frame. Omit where gasketing is specified or required by code.

2.14 FINISHES

A. Finish of all hardware shall be US10B (BHMA 613/640) with the exceptions as follows:

1. Von Duprin Exit Devices: Anodized Duranodic US313AN (BHMA 710)
2. Door Closers: Powder Coat to Match.
3. Weatherstipping: Dark Bronze Anodized Aluminum.
4. Thresholds: Mill Finish Aluminum Dark Bronze.
5. Note: US10B (BHMA 613) finish for special pull RM3230 is available as special order.

2.15 KEYING

A. Manufacturers:

1. Scheduled Manufacturer: Schlage, to match Owner's existing keying.

B. Requirements:

1. Provide cores and cylinders for the Owner's Existing key system conforming to the following requirements:

   a. Provide removable core cylinders at all exterior keyed devices and exterior and interior exit device trim. Provide construction cores with construction master keying for use during construction. The hardware supplier, accompanied by the Owner or Owner's security agent, shall install permanent keyed cores upon completion of the project. The temporary construction cores are to be returned to the hardware supplier.
   b. Provide conventional cylinders at all other interior keyed devices, and exterior and interior exit device cylinder dogging. Provide construction master keying for use during construction. The hardware supplier, accompanied by the Owner or Owner's security agent, shall void the construction keying upon completion of the building.
   c. Provide permanent cores and cylinders keyed by the manufacturer or authorized distributor into the existing key system as directed by the Owner. Provide owner with a copy of the bitting list, return receipt requested.
   d. The hardware supplier, accompanied by a qualified factory representative for the manufacturer of the cores and cylinders, shall meet with Owner and Architect to review keying requirements and lock functions prior to ordering door hardware. Submit a keying schedule to Architect for approval.
   e. Provide keys as follows
      1) Ten grand master keys for each set.
      2) Ten master keys for each set.
      3) Three keys per core and/or cylinder.
      4) Two construction core control keys
      5) Two permanent core control keys
      6) Six construction master keys for each type (Contractor is to provide one set of construction keys to Architect)

   f. Visual key control:
      1) Keys shall be stamped with their respective key set number and stamped "DO NOT DUPLICATE".
      2) All keys shall be stamped with their respective key set letters.
      3) Do not stamp any keys with the factory key change number.
      4) Do not stamp any cores with key set on face (front) of Core. Stamp on back or side of cores so not to be visible when core is in cylinder.

g. Deliver all keys and/or key blanks from the factory or authorized distributor directly to the Owner in sealed containers, return receipt requested. Failure to comply with these requirements may be cause to require replacement of all or any part of the keying system that was compromised at no additional cost to the Owner.

PART 3 - EXECUTION

3.1 EXAMINATION

A. Prior to installation of hardware, examine doors and frames, with Installer present, for compliance with requirements for installation tolerances, labeled fire-rated door assembly construction, wall and floor construction, and other conditions affecting performance.

B. Proceed with installation only after unsatisfactory conditions have been corrected.

3.2 INSTALLATION

A. Mounting Heights: Mount door hardware units at heights to comply with the following, unless otherwise indicated or required to comply with governing regulations.

1. Standard Steel Doors and Frames: ANSI/SDI A250.8.
2. Custom Steel Doors and Frames: HMMA 831.
3. Wood Doors: DHI WDHS.3, "Recommended Locations for Architectural Hardware for Wood Flush Doors."

B. Install each hardware item in compliance with the manufacturer’s instructions and recommendations, using only the fasteners provided by the manufacturer.

C. Do not install surface mounted items until finishes have been completed on the substrate. Protect all installed hardware during painting.

D. Set units level, plumb and true to line and location. Adjust and reinforce the attachment substrate as necessary for proper installation and operation.

E. Drill and countersink units that are not factory prepared for anchorage fasteners. Space fasteners and anchors according to industry standards.

F. Operating parts shall move freely and smoothly without binding, sticking, or excessive clearance.

G. Hinges: Install types and in quantities indicated in door hardware schedule but not fewer than the number recommended by manufacturer for application indicated or one hinge for every 30 inches (750 mm) of door height, whichever is more stringent, unless other equivalent means of support for door, such as spring hinges or pivots, are provided.

H. Lock Cylinders: Install construction cores to secure building and areas during construction period.

1. Replace construction cores with permanent cores as directed by Owner.

I. Thresholds: Set thresholds scheduled herein, in full bed of sealant complying with requirements specified in Division 07 Section "Joint Sealants."

J. Stops: Provide floor stops for doors unless other type stops are indicated in door hardware schedule. Do not mount floor stops where they may impede traffic or present a tripping hazard.

K. Perimeter Gasketing: Apply to head and jamb, forming seal between door and frame.

L. Meeting Stile Gasketing: Fasten to meeting stiles, forming seal when doors are closed.

M. Door Bottoms: Apply to bottom of door, forming seal with threshold when door is closed.

3.3 ADJUSTING

A. Initial Adjustment: Adjust and check each operating item of door hardware and each door to ensure proper operation or function of every unit. Replace units that cannot be adjusted to operate as intended. Adjust door control devices to compensate for final operation of heating and ventilating equipment and to comply with referenced accessibility requirements.

1. Door Closers: Adjust sweep period to comply with accessibility requirements and requirements of authorities having jurisdiction.

B. Occupancy Adjustment: Approximately three months after date of Substantial Completion, Installer's Architectural Hardware Consultant shall examine and readjust each item of door hardware, including adjusting operating forces, as necessary to ensure function of doors, door hardware, and electrified door hardware.

3.4 CLEANING AND PROTECTION

A. Clean adjacent surfaces soiled by door hardware installation.

B. Clean operating items as necessary to restore proper function and finish.

C. Provide final protection and maintain conditions that ensure that door hardware is without damage or deterioration at time of Substantial Completion.

3.5 DOOR HARDWARE SCHEDULE

A. Provide hardware for each door to comply with requirements of this section and the below-listed scheduled sets.

B. It is intended that the following schedule includes complete items of door hardware necessary to complete the work. If a discrepancy is found in the scheduled hardware sets, such as a missing item, improper hardware for a frame, door or fire codes, provisions of the above-specifications shall govern.

C. Locksets, exit devices, and other hardware items are referenced in the following hardware sets for series, type and function. Refer to the above-specifications for special features, options, cylinders/keying, and other requirements.

D. Hardware Sets

Hardware Set HWS 1

Each to Receive: DOORS 101

3.00	EA	BUTTS	FBB199 5 X 5 NRP	STANLEY WORKS
1.00	EA	RIM EXIT DEVICE	CD-33A-NL-OP X LESS PULL	VON DUPRIN INC.
2.00	EA	MORT. CYLINDER	20-771	SCHLAGE LOCK CO.
1.00	EA	SPEC PULL	RM3230 - 10"	ROCKWOOD
1.00	EA	CLOSER	4111 H CUSH	LCN
1.00	EA	DROP PLATE	4110 - 18 CUSH	LCN
1.00	EA	KICKPLATE	8 X 35 X .062 X 4BE	ROCKWOOD
1.00	EA	FLOOR STOP	446	ROCKWOOD
1.00	EA	THRESHOLD	613BR - 72"	NATIONAL GUARD
1.00	SET	WEATHERSTRIPING	700S 1/72" 2/80"	NATIONAL GUARD
1.00	EA	SWEEPS	1015V - 36"	NATIONAL GUARD

Hardware Set HWS 2

Each to Receive: DOORS 102

3.00	EA	BUTTS	FBB168 5 X 5	STANLEY WORKS
1.00	EA	PUSH PLATE	70B 3-1/2 X 15	ROCKWOOD
1.00	EA	DOOR PULL	RM3230-10”	ROCKWOOD
1.00	EA	CLOSER	4111 - EDA	LCN
1.00	EA	KICKPLATE	8 X 34 X .062 X 4BE	ROCKWOOD
1.00	EA	FLOOR STOP	446	ROCKWOOD
1.00	SET	GASKETING	5050 - 17'	NATIONAL GUARD

Hardware Set HWS 3

Each to Receive: DOORS 125

3.00	EA	BUTTS	FBB191 4 1/2 X 4 1/2	STANLEY WORKS
1.00	EA	PUSH PLATE	70E 8 X 16 . 062	ROCKWOOD
1.00	EA	DOOR PULL	BF107 X 70C X .062	ROCKWOOD
1.00	EA	CLOSER	4010 REG	LCN
2.00	EA	KICKPLATE	8 X 34 X .062 X 4BE	ROCKWOOD
1.00	EA	FLOOR STOP	446	ROCKWOOD
3.00	EA	SILENCERS	GJ64	GLYNN-JOHNSON CO.

Hardware Set HWS 4

Each to Receive: DOORS 103, 105, 106, 107, 108, 109, 109, 110, 111, 112, 113, 114, 118, 119, 122

3.00	EA	BUTTS	FBB179 4 1/2 X 4 1/2	STANLEY WORKS
1.00	EA	LOCKSET	L9050RD X 07A	SCHLAGE LOCK CO.
1.00	EA	KICKPLATE	8 X 34 X .062 X 4BE	ROCKWOOD
1.00	EA	FLOOR STOP	446	ROCKWOOD
3.00	EA	SILENCERS	GJ64	GLYNN-JOHNSON CO.

Hardware Set HWS 5

Each to Receive: DOORS 104, 120, 121, 123

3.00	EA	BUTTS	FBB179 4 1/2 X 4 1/2	STANLEY WORKS
1.00	EA	LOCKSET	L9080RD X 07A	SCHLAGE LOCK CO.
1.00	EA	KICKPLATE	8 X 34 X .062 X 4BE	ROCKWOOD
1.00	EA	FLOOR STOP	446	ROCKWOOD
3.00	EA	SILENCERS	GJ64	GLYNN-JOHNSON CO.

Hardware Set HWS 6

Each to Receive: DOORS 115, 124

6.00	EA	BUTTS	FBB179 4 1/2 X 4 1/2 NRP	STANLEY WORKS
2.00	EA	SVR EXIT DEVICE	9927L-LBR	VON DUPRIN
1.00	EA	ELECTRIC STRIKE	310-3-3	FOLGER ADAM
2.00	EA	RIM CYLINDER	20-710	SCHLAGE LOCK CO.
2.00	EA	CLOSER	4111 - EDA	LCN
2.00	EA	KICKPLATE	8 X 29 X .062 X 4BE	ROCKWOOD
2.00	EA	FLOOR STOP	446	ROCKWOO
1.00	SET	GASKTING	5050 - 20'	NATIONAL GUARD
		NOTE:	CARD READER BY OTHERS	

Hardware Set HWS 7

Each to Receive: EXISTING DOORS 116, 117

2.00	EA	SVR EXIT DEVICE	9927L-LBR	VON DUPRIN
1.00	EA	ELECTRIC STRKE	310-3-3	FOLGER ADAM
2.00	EA	RIM CYLINDER	20-710	SCHLAGE LOCK CO.
		NOTE:	CARD READER BY OTHERS	

END OF SECTION

SECTION 09221 - NON-STRUCTURAL METAL FRAMING

PART 1 - GENERAL

1.1 SUMMARY

A. Related Documents:
1. Drawings and general provisions of the Contract apply to this Section.
2. Review these documents for coordination with additional requirements and information that apply to work under this Section.

B. Section Includes:
1. Metal framing for gypsum board.

C. Related Sections:
1. Division 01 Section "General Requirements."
2. Division 07 Section "Blanket Insulation."
3. Division 09 Section "Gypsum Board".

1.2 REFERENCES

A. General:
1. The following documents form part of the Specifications to the extent stated. Where differences exist between codes and standards, the one affording the greatest protection shall apply.
2. Unless otherwise noted, the referenced standard edition is the current one at the time of commencement of the Work.
3. Refer to Division 01 Section "General Requirements" for the list of applicable regulatory requirements.

B. AISI "Specification for the Design of Cold-Formed Steel Structural Members", latest edition and amendments.

C. ASTM International:
1. ASTM A641 Standard Specification for Zinc-Coated (Galvanized) Carbon Steel Wire.
2. ASTM A1008 Standard Specification for Steel, Sheet, Cold-Rolled, Carbon, Structural, High-Strength Low-Alloy and High-Strength Low-Alloy with Improved Formability.
3. ASTM A1011 Standard Specification for Steel, Sheet and Strip, Hot-Rolled, Carbon, Structural, High-Strength Low-Alloy and High-Strength Low-Alloy with Improved Formability.
4. ASTM C645 Standard Specification for Nonstructural Steel Framing Members.
5. ASTM C754 Standard Specification for Installation of Steel Framing Members to Receive Screw-Attached Panel Products.

1.3 SUBMITTALS

A. Submit under provisions of Division 01 Section "General Requirements."

B. Product Data: Manufacturer’s product data and installation instructions for each item of metal framing, [metal suspension system], [safing insulation], and accessories.

C. Approved ICBO report for fasteners proposed to attach metal framing systems to building superstructure.

1.4 QUALITY ASSURANCE

A. Fire-Test-Response Characteristics: For fire-resistance-rated assemblies that incorporate non-load-bearing steel framing, provide materials and construction identical to those tested in assembly indicated according to ASTM E 119 by an independent testing agency.

1.5 DELIVERY AND STORAGE

A. Deliver materials in original unopened packages, containers or bundles bearing manufacturer's name, brand, and type of material.

B. Store materials in accordance with manufacturer's recommendations and in protected dry storage areas. Protect metal items from rusting.

PART 2 - PRODUCTS

2.1 MATERIALS

A. Metal Studs: ASTM 645, C-type, 20 gage (.0329 inch (0.8 mm) minimum thickness) unless otherwise indicated, 1-5/8 inch (9.5 mm) flanges, screw type, galvanized.
   1. Runners: Same as studs.
   2. Top Runners: Double 2 inches (50 mm) min flange top runners at head of structure high partitions.
   3. Where stud size is not indicated, conform to manufacturer's recommendations and code requirements for minimum size based on partition heights.

B. Metal Furring Channels: 22 gage (.0269 inch (0.7 mm) minimum thickness) unless otherwise indicated, galvanized, roll formed, hat shaped channels, screw type.

C. Stiffener Channels: 1-1/2 (38 mm) and 3/4 (18 mm) galvanized cold rolled steel channels.

PART 3 - EXECUTION

3.1 EXAMINATION

A. Inspect surfaces, backing, and structural systems to receive metal framing, furring and ceiling suspension systems, and report any discrepancies in writing to Project Manager for resolution. Starting work implies acceptance of existing conditions.

3.2 PREPARATION

A. Obtain dimensions and locations from other trades, and provide openings and enclosures for accessories, specialties, equipment and ductwork.

3.3 INSTALLATION

A. General:
   1. Attach securely to building structure. Install members true to lines and levels to provide flatness with maximum variation of 1/8 inch (3 mm) in 10 feet (3 m) in any direction for walls, and 1/8 inch (3 mm) in 12 feet (3.6 m) for ceilings.
   2. Coordinate installation of bucks, anchors, blocking, electrical and mechanical work which is to be placed in or behind partition or ceiling framing. Allow items to be installed after framing is complete.

B. Metal Framing:
   1. Door Opening Framing: Install double studs at door frame jambs. Install runners on each side at frame head height between jamb studs and adjacent studs.
   2. Install solid blocking at edges of gypsum board panels.
   3. Furring: Install wall furring channels vertically, unless otherwise indicated. Unless otherwise indicated, terminate vertical furring 3 inches (75 mm) above suspended ceilings.

END OF SECTION 092216

SECTION 09250 - GYPSUM BOARD

PART 1 - GENERAL

1.1 RELATED DOCUMENTS

A. Drawings and general provisions of the Contract, including General and Supplementary Conditions and Division 01 Specification Sections, apply to this Section.

1.2 SUMMARY

A. Section Includes:

1. Interior gypsum board.

B. Related Requirements:

1. Section 09310 "Ceramic Tile" for cementitious backer units installed as substrates for ceramic tile.

1.3 ACTION SUBMITTALS

A. Product Data: For each type of product.

B. LEED Submittals:

1. Product Data for Credit MR 4: For products having recycled content, documentation indicating percentages by weight of postconsumer and preconsumer recycled content. Include statement indicating cost for each product having recycled content.
2. Product Certificates for Credit MR 5: For products and materials required to comply with requirements for regional materials, certificates indicating location of material manufacturer and point of extraction, harvest, or recovery for each raw material. Include statement indicating distance to Project, cost for each regional material, and fraction by weight that is considered regional.
3. Product Certificates for Credit MR 5: For products and materials required to comply with requirements for regionally manufactured: For products and materials required to comply with requirements for regionally manufactured materials. Include statement indicating cost for each regionally manufactured material.

    a. Include statement indicating location of manufacturer and distance to Project for each regionally manufactured material.
    b. Include statement indicating location of manufacturer and point of extraction, harvest, or recovery for each raw material used in regionally extracted and manufactured materials. Indicate distance to Project and fraction by weight of each regionally manufactured material that is regionally extracted.

4. Product Data for Credit IEQ 4.1: For adhesives used to laminate gypsum board panels to substrates, documentation including printed statement of VOC content.
5. Laboratory Test Reports for Credit IEQ 4: For adhesives used to laminate gypsum board panels to substrates, documentation indicating that products comply with the testing and product requirements of the California Department of Health Services' "Standard Practice for the Testing

of Volatile Organic Emissions from Various Sources Using Small-Scale Environmental Chambers."

1.4 QUALITY ASSURANCE

A. Mockups: Before beginning gypsum board installation, install mockups of at least 100 sq. ft. (9 sq. m) in surface area to demonstrate aesthetic effects and set quality standards for materials and execution.

1. Install mockups for the following:

a. Each level of gypsum board finish indicated for use in exposed locations.

2. Apply or install final decoration indicated, including painting and wallcoverings, on exposed surfaces for review of mockups.
3. Simulate finished lighting conditions for review of mockups.
4. Subject to compliance with requirements, approved mockups may become part of the completed Work if undisturbed at time of Substantial Completion.

1.5 DELIVERY, STORAGE AND HANDLING

A. Store materials inside under cover and keep them dry and protected against weather, condensation, direct sunlight, construction traffic, and other potential causes of damage. Stack panels flat and supported on risers on a flat platform to prevent sagging.

1.6 FIELD CONDITIONS

A. Environmental Limitations: Comply with ASTM C 840 requirements or gypsum board manufacturer's written recommendations, whichever are more stringent.

B. Do not install paper-faced gypsum panels until installation areas are enclosed and conditioned.

C. Do not install panels that are wet, those that are moisture damaged, and those that are mold damaged.

1. Indications that panels are wet or moisture damaged include, but are not limited to, discoloration, sagging, or irregular shape.
2. Indications that panels are mold damaged include, but are not limited to, fuzzy or splotchy surface contamination and discoloration.

PART 2 - PRODUCTS

2.1 PERFORMANCE REQUIREMENTS

A. Fire-Resistance-Rated Assemblies: For fire-resistance-rated assemblies, provide materials and construction identical to those tested in assembly indicated according to ASTM E 119 by an independent testing agency.

B. STC-Rated Assemblies: For STC-rated assemblies, provide materials and construction identical to those tested in assembly indicated according to ASTM E 90 and classified according to ASTM E 413 by an independent testing agency.

C. Low Emitting Materials: For ceiling and wall assemblies, provide materials and construction identical to those tested in assembly and complying with the testing and product requirements of the California Department of Health Services' "Standard Practice for the Testing of Volatile Organic Emissions from Various Sources Using Small-Scale Environmental Chambers."

2.2 GYPSUM BOARD, GENERAL

A. Recycled Content of Gypsum Panel Products: Postconsumer recycled content plus one-half of preconsumer recycled content not less than 10 percent.

B. Regional Materials: Gypsum panel products shall be manufactured within 500 miles (800 km) of Project site from materials that have been extracted, harvested, or recovered, as well as manufactured, within 500 miles (800 km) of Project site.

C. Regional Materials: Gypsum panel products shall be manufactured within 500 miles (800 km) of Project site.

D. Size: Provide maximum lengths and widths available that will minimize joints in each area and that correspond with support system indicated.

2.3 INTERIOR GYPSUM BOARD

A. Manufacturers: Subject to compliance with requirements, available manufacturers offering products that may be incorporated into the Work include, but are not limited to, the following:

1. American Gypsum.
2. CertainTeed Corp.
3. Georgia-Pacific Gypsum LLC.
4. Lafarge North America Inc.
5. National Gypsum Company.
6. PABCO Gypsum.
7. Temple-Inland.
8. USG Corporation.

B. Gypsum Wallboard: ASTM C 1396/C 1396M.

1. Thickness: 5/8 inch (12.7 mm).
2. Long Edges: Tapered.

C. Gypsum Board, Type X: ASTM C 1396/C 1396M.

1. Thickness: 5/8 inch (15.9 mm).
2. Long Edges: Tapered.

D. Gypsum Ceiling Board: ASTM C 1396/C 1396M.

1. Thickness: 1/2 inch (12.7 mm).
2. Long Edges: Tapered.

2.4 SPECIALTY GYPSUM BOARD

A. Gypsum Board, Type C: ASTM C 1396/C 1396M. Manufactured to have increased fire-resistive capability.

1. Products: Subject to compliance with requirements, available products that may be incorporated into the Work include, but are not limited to, the following:

a. American Gypsum; Firebloc Type C.
b. CertainTeed Corp.; ProRoc Type C.
c. Georgia-Pacific Gypsum LLC; Fireguard C.
d. Lafarge North America Inc.; Firecheck Type C.
e. National Gypsum Company; Gold Bond Fire-Shield C.
f. PABCO Gypsum; Flame Curb Type Super C.
g. Temple-Inland; Type TG-C.
h. USG Corporation; Firecode C Core.

2. Thickness: As required by fire-resistance-rated assembly indicated on Drawings.
3. Long Edges: Tapered.

2.5 TRIM ACCESSORIES

A. Interior Trim: ASTM C 1047.

1. Material: Galvanized or aluminum-coated steel sheet or rolled zinc.
2. Shapes:

a. Cornerbead.
b. Bullnose bead.
c. LC-Bead: J-shaped; exposed long flange receives joint compound.
d. L-Bead: L-shaped; exposed long flange receives joint compound.
e. Expansion (control) joint.

2.6 JOINT TREATMENT MATERIALS

A. General: Comply with ASTM C 475/C 475M.

B. Joint Tape:

1. Interior Gypsum Board: Paper.

C. Joint Compound for Interior Gypsum Board: For each coat use formulation that is compatible with other compounds applied on previous or for successive coats.

1. Prefilling: At open joints, rounded or beveled panel edges, and damaged surface areas, use setting-type taping compound.
2. Embedding and First Coat: For embedding tape and first coat on joints, fasteners, and trim flanges, use setting-type taping compound.

a. Use setting-type compound for installing paper-faced metal trim accessories.

3. Fill Coat: For second coat, use setting-type, sandable topping compound.
4. Finish Coat: For third coat, use drying-type, all-purpose compound.

2.7 AUXILIARY MATERIALS

A. General: Provide auxiliary materials that comply with referenced installation standards and manufacturer's written recommendations.

B. Steel Drill Screws: ASTM C 1002, unless otherwise indicated.

1. Use screws complying with ASTM C 954 for fastening panels to steel members from 0.033 to 0.112 inch (0.84 to 2.84 mm) thick.
2. For fastening cementitious backer units, use screws of type and size recommended by panel manufacturer.

C. Sound Attenuation Blankets: ASTM C 665, Type I (blankets without membrane facing) produced by combining thermosetting resins with mineral fibers manufactured from glass, slag wool, or rock wool.

1. Fire-Resistance-Rated Assemblies: Comply with mineral-fiber requirements of assembly.
2. Recycled Content of Blankets: Postconsumer recycled content plus one-half of preconsumer recycled content not less than 25 percent.

D. Acoustical Joint Sealant: Manufacturer's standard nonsag, paintable, nonstaining latex sealant complying with ASTM C 834. Product effectively reduces airborne sound transmission through perimeter joints and openings in building construction as demonstrated by testing representative assemblies according to ASTM E 90.

1. Products: Subject to compliance with requirements, available products that may be incorporated into the Work include, but are not limited to, the following:

a. Accumetric LLC; BOSS 824 Acoustical Sound Sealant.
b. Grabber Construction Products; Acoustical Sealant GSC.
c. Pecora Corporation; AIS-919.
d. Specified Technologies, Inc.; Smoke N Sound Acoustical Sealant.
e. USG Corporation; SHEETROCK Acoustical Sealant.

2. Acoustical joint sealant shall have a VOC content of 250 g/L or less when calculated according to 40 CFR 59, Subpart D (EPA Method 24).
3. Acoustical joint sealant shall comply with the testing and product requirements of the California Department of Health Services' "Standard Practice for the Testing of Volatile Organic Emissions from Various Sources Using Small-Scale Environmental Chambers."

E. Thermal Insulation: As specified in Section 07210 "Building Insulation."

F. Vapor Retarder: As specified in Section 07210 "Building Insulation."

PART 3 - EXECUTION

3.1 EXAMINATION

A. Examine areas and substrates including welded hollow-metal frames and framing, with Installer present, for compliance with requirements and other conditions affecting performance.

B. Examine panels before installation. Reject panels that are wet, moisture damaged, and mold damaged.

C. Proceed with installation only after unsatisfactory conditions have been corrected.

3.2 APPLYING AND FINISHING PANELS, GENERAL

A. Comply with ASTM C 840.

B. Install ceiling panels across framing to minimize the number of abutting end joints and to avoid abutting end joints in central area of each ceiling. Stagger abutting end joints of adjacent panels not less than one framing member.

C. Install panels with face side out. Butt panels together for a light contact at edges and ends with not more than 1/16 inch (1.5 mm) of open space between panels. Do not force into place.

D. Locate edge and end joints over supports, except in ceiling applications where intermediate supports or gypsum board back-blocking is provided behind end joints. Do not place tapered edges against cut edges or ends. Stagger vertical joints on opposite sides of partitions. Do not make joints other than control joints at corners of framed openings.

E. Form control and expansion joints with space between edges of adjoining gypsum panels.

F. Cover both faces of support framing with gypsum panels in concealed spaces (above ceilings, etc.), except in chases braced internally.

1. Unless concealed application is indicated or required for sound, fire, air, or smoke ratings, coverage may be accomplished with scraps of not less than 8 sq. ft. (0.7 sq. m) in area.
2. Fit gypsum panels around ducts, pipes, and conduits.
3. Where partitions intersect structural members projecting below underside of floor/roof slabs and decks, cut gypsum panels to fit profile formed by structural members; allow 1/4- to 3/8-inch- (6.4- to 9.5-mm-) wide joints to install sealant.

G. Isolate perimeter of gypsum board applied to non-load-bearing partitions at structural abutments, except floors. Provide 1/4- to 1/2-inch- (6.4- to 12.7-mm-) wide spaces at these locations and trim edges with edge trim where edges of panels are exposed. Seal joints between edges and abutting structural surfaces with acoustical sealant.

H. Attachment to Steel Framing: Attach panels so leading edge or end of each panel is attached to open (unsupported) edges of stud flanges first.

I. Wood Framing: Install gypsum panels over wood framing, with floating internal corner construction. Do not attach gypsum panels across the flat grain of wide-dimension lumber, including floor joists and headers. Float gypsum panels over these members or provide control joints to counteract wood shrinkage.

J. STC-Rated Assemblies: Seal construction at perimeters, behind control joints, and at openings and penetrations with a continuous bead of acoustical sealant. Install acoustical sealant at both faces of partitions at perimeters and through penetrations. Comply with ASTM C 919 and with manufacturer's written recommendations for locating edge trim and closing off sound-flanking paths around or through assemblies, including sealing partitions above acoustical ceilings.

K. Install sound attenuation blankets before installing gypsum panels unless blankets are readily installed after panels have been installed on one side.

3.3 APPLYING INTERIOR GYPSUM BOARD

A. Install interior gypsum board in the following locations:

1. Wallboard Type: As indicated on Drawings.
2. Type X: As indicated on Drawings.
3. Ceiling Type: As indicated on Drawings.
4. Type C: As indicated on Drawings or where required for specific fire-resistance-rated assembly indicated.

B. Single-Layer Application:

1. On ceilings, apply gypsum panels before wall/partition board application to greatest extent possible and at right angles to framing unless otherwise indicated.
2. On partitions/walls, apply gypsum panels horizontally (perpendicular to framing) unless otherwise indicated or required by fire-resistance-rated assembly, and minimize end joints.

    a. Stagger abutting end joints not less than one framing member in alternate courses of panels.
    b. At stairwells and other high walls, install panels horizontally unless otherwise indicated or required by fire-resistance-rated assembly.

3. On Z-furring members, apply gypsum panels vertically (parallel to framing) with no end joints. Locate edge joints over furring members.
4. Fastening Methods: Apply gypsum panels to supports with steel drill screws.

3.4 INSTALLING TRIM ACCESSORIES

A. General: For trim with back flanges intended for fasteners, attach to framing with same fasteners used for panels. Otherwise, attach trim according to manufacturer's written instructions.

B. Interior Trim: Install in the following locations:

1. Cornerbead: Use at outside corners unless otherwise indicated.
2. Bullnose Bead: Use where indicated.
3. LC-Bead: Use at exposed panel edges.
4. L-Bead: Use where indicated.

3.5 FINISHING GYPSUM BOARD

A. General: Treat gypsum board joints, interior angles, edge trim, control joints, penetrations, fastener heads, surface defects, and elsewhere as required to prepare gypsum board surfaces for decoration. Promptly remove residual joint compound from adjacent surfaces.

B. Prefill open joints and damaged surface areas.

C. Apply joint tape over gypsum board joints, except for trim products specifically indicated as not intended to receive tape.

D. Gypsum Board Finish Levels: Finish panels to levels indicated below and according to ASTM C 840:
1. Level 2: Where indicated on Drawings.
2. Level 3: Where indicated on Drawings.
3. Level 4: At panel surfaces that will be exposed to view unless otherwise indicated.

    a. Primer and its application to surfaces are specified in Section 09912 "Interior Painting."

4. Level 5: Where indicated on Drawings.

a. Primer and its application to surfaces are specified in Section 09912 "Interior Painting."

3.6 PROTECTION

A. Protect adjacent surfaces from drywall compound and promptly remove from floors and other non-drywall surfaces. Repair surfaces stained, marred, or otherwise damaged during drywall application.

B. Protect installed products from damage from weather, condensation, direct sunlight, construction, and other causes during remainder of the construction period.

C. Remove and replace panels that are wet, moisture damaged, and mold damaged.

1. Indications that panels are wet or moisture damaged include, but are not limited to, discoloration, sagging, or irregular shape.
2. Indications that panels are mold damaged include, but are not limited to, fuzzy or splotchy surface contamination and discoloration.

END OF SECTION 09250

SECTION 09510 - ACOUSTICAL PANEL CEILINGS

PART 1 - GENERAL

1.1 RELATED DOCUMENTS

A. Drawings and general provisions of the Contract, including General and Supplementary Conditions and Division 01 Specification Sections, apply to this Section.

1.2 SUMMARY

A. This Section includes acoustical panels and exposed suspension systems for ceilings.

B. Related Sections include the following:

C. Products furnished, but not installed under this Section, include anchors, clips, and other ceiling attachment devices to be cast in concrete at ceilings.

1.3 DEFINITIONS

A. AC: Articulation Class.

B. CAC: Ceiling Attenuation Class.

C. LR: Light Reflectance coefficient.

D. NRC: Noise Reduction Coefficient.

1.4 SUBMITTALS

A. Product Data: For each type of product indicated.

B. Samples for Initial Selection: For components with factory-applied color finishes.

1.5 DELIVERY, STORAGE, AND HANDLING

A. Deliver acoustical panels, suspension system components, and accessories to Project site in original, unopened packages and store them in a fully enclosed, conditioned space where they will be protected against damage from moisture, humidity, temperature extremes, direct sunlight, surface contamination, and other causes.

B. Before installing acoustical panels, permit them to reach room temperature and a stabilized moisture content.

C. Handle acoustical panels carefully to avoid chipping edges or damaging units in any way.

1.6 PROJECT CONDITIONS

A. Environmental Limitations: Do not install acoustical panel ceilings until spaces are enclosed and weatherproof, wet work in spaces is complete and dry, work above ceilings is complete, and ambient temperature and humidity conditions are maintained at the levels indicated for Project when occupied for its intended use.

1.7 COORDINATION

A. Coordinate layout and installation of acoustical panels and suspension system with other construction that penetrates ceilings or is supported by them, including light fixtures, HVAC equipment, fire-suppression system, and partition assemblies.

PART 2 - PRODUCTS

2.1 ACOUSTICAL PANELS, GENERAL

A. Acoustical Panel Standard: Provide manufacturer's standard panels of configuration indicated that comply with ASTM E 1264 classifications as designated by types, patterns, acoustical ratings, and light reflectances, unless otherwise indicated.

B. Acoustical Panel Colors and Patterns: Match appearance characteristics indicated for each product type.

2.2 ACOUSTICAL PANELS FOR ACOUSTICAL PANEL CEILING

A. Products: Subject to compliance with requirements, provide one of the following:

B. Basis-of-Design Product: Subject to compliance with requirements, provide Armstrong Industries “Cortega 15/16” Square Edge lay-in” or a comparable product by one of the following:

1. Match Existing Tile & Suspension system.
2. Chicago Metallic Corporation.
3. USG Interiors, Inc.

C. Classification: Provide panels complying with ASTM E 1264 for type, form, and pattern as follows:

1. Type and Form: Type III, mineral base with painted finish.
2. Pattern: medium textured – non-directional.

D. Color: White.

E. LR: Not less than 0.82.

F. NRC: Not less than 0.55.

G. CAC: Not less than 35 .

H. AC: Not less than 170.

I. Edge/Joint Detail: Reveal sized to fit flange of exposed suspension system members

J. Thickness: 5/8inch.

K. Modular Size: 24 by 24 inches.

L. Antimicrobial Treatment: Broad spectrum fungicide and bactericide based.

2.3 METAL SUSPENSION SYSTEMS, GENERAL

A. Metal Suspension System Standard: Provide manufacturer's standard direct-hung metal suspension systems of types, structural classifications, and finishes indicated that comply with applicable requirements in ASTM C 635.

B. Finishes and Colors, General: Comply with NAAMM's "Metal Finishes Manual for Architectural and Metal Products" for recommendations for applying and designating finishes. Provide manufacturer's standard factory-applied finish for type of system indicated.

C. Attachment Devices: Size for five times the design load indicated in ASTM C 635, Table 1, "Direct Hung," unless otherwise indicated. Comply with seismic design requirements.

D. Wire Hangers, Braces, and Ties: Provide wires complying with the following requirements:

1. Zinc-Coated, Carbon-Steel Wire: ASTM A 641/A 641M, Class 1 zinc coating, soft temper.

2.4 METAL SUSPENSION SYSTEM FOR ACOUSTICAL PANEL CEILING

A. Basis-of-Design Product: Subject to compliance with requirements, provide Armstrong Industries “Prelude” 15/16” or a comparable product by one of the following:

1. Chicago Metallic Corporation
2. Ecophon CertainTeed, Inc.
3. USG Interiors, Inc.

PART 3 - EXECUTION

3.1 EXAMINATION

A. Examine substrates, areas, and conditions, including structural framing to which acoustical panel ceilings attach or abut, with Installer present, for compliance with requirements specified in this and other Sections that affect ceiling installation and anchorage and with requirements for installation tolerances and other conditions affecting performance of acoustical panel ceilings.

1. Proceed with installation only after unsatisfactory conditions have been corrected.

3.2 PREPARATION

A. Measure each ceiling area and establish layout of acoustical panels to balance border widths at opposite edges of each ceiling. Avoid using less-than-half-width panels at borders, and comply with layout shown on reflected ceiling plans.

3.3 INSTALLATION

A. General: Install acoustical panel ceilings to comply with ASTM C 636 and seismic design requirements indicated, per manufacturer's written instructions and CISCA's "Ceiling Systems Handbook."

B. Suspend ceiling hangers from building's structural members and as follows:

1. Install hangers plumb and free from contact with insulation or other objects within ceiling plenum that are not part of supporting structure or of ceiling suspension system.
2. Secure wire hangers to ceiling suspension members and to supports above with a minimum of three tight turns. Connect hangers directly either to structures or to inserts, eye screws, or other devices that are secure and appropriate for substrate and that will not deteriorate or otherwise fail due to age, corrosion, or elevated temperatures.
3. Space hangers not more than 48 inches (1200 mm) o.c. along each member supported directly from hangers, unless otherwise indicated; provide hangers not more than 8 inches (200 mm) from ends of each member.

C. Secure bracing wires to ceiling suspension members and to supports with a minimum of four tight turns. Suspend bracing from building's structural members as required for hangers, without attaching to permanent metal forms, steel deck, or steel deck tabs. Fasten bracing wires into concrete with cast-in-place or postinstalled anchors.

D. Install edge moldings and trim of type indicated at perimeter of acoustical ceiling area and where necessary to conceal edges of acoustical panels.

E. Install suspension system runners so they are square and securely interlocked with one another. Remove and replace dented, bent, or kinked members.

F. Install acoustical panels with undamaged edges and fit accurately into suspension system runners and edge moldings. Scribe and cut panels at borders and penetrations to provide a neat, precise fit.

END OF SECTION 09510

SECTION 09651 - RESILIENT BASE

PART 1 - GENERAL

1.1 RELATED DOCUMENTS

A. Drawings and general provisions of the Contract, including General and Supplementary Conditions and Division 01 Specification Sections, apply to this Section.

1.2 SUMMARY

A. Section Includes:

1. Resilient base.

1.3 ACTION SUBMITTALS

A. Product Data: For each type of product.

B. Samples for Initial Selection: For each type of product indicated.

1.4 MAINTENANCE MATERIAL SUBMITTALS

A. Furnish extra materials that match products installed and that are packaged with protective covering for storage and identified with labels describing contents.

1. Furnish not less than 10 linear feet for every 500 linear feet or fraction thereof, of each type, color, pattern, and size of resilient product installed.

1.5 DELIVERY, STORAGE, AND HANDLING

A. Store resilient products and installation materials in dry spaces protected from the weather, with ambient temperatures maintained within range recommended by manufacturer, but not less than 50 deg F or more than 90 deg F.

1.6 FIELD CONDITIONS

A. Maintain ambient temperatures within range recommended by manufacturer

B. Install resilient products after other finishing operations, including painting, have been completed.

PART 2 - PRODUCTS

2.1 THERMOSET-RUBBER BASE

A. Manufacturers: Subject to compliance with requirements, provide products by one of the following:

1. Johnsonoite as basis of design.

B. Product Standard: ASTM F 1861, Type TS (rubber, vulcanized thermoset), Group I (solid, homogeneous).

1. Style and Location:

a. Style B, Cove:

C. Thickness: 0.125 inch.

D. Height: 4 inches

E. Lengths: Coils in manufacturer's standard length.

F. Outside Corners: Job formed or preformed.

G. Inside Corners: Job formed or preformed.

H. Colors: As selected by Architect from full range of industry colors

2.2 INSTALLATION MATERIALS

A. Adhesives: Water-resistant type recommended by resilient-product manufacturer for resilient products and substrate conditions indicated.

1. Adhesives shall have a VOC content of 50 g/L or less.

PART 3 - EXECUTION

3.1 EXAMINATION

A. Examine substrates, with Installer present, for compliance with requirements for maximum moisture content and other conditions affecting performance of the Work.

1. Verify that finishes of substrates comply with tolerances and other requirements specified in other Sections and that substrates are free of cracks, ridges, depressions, scale, and foreign deposits that might interfere with adhesion of resilient products.

B. Proceed with installation only after unsatisfactory conditions have been corrected.

1. Installation of resilient products indicates acceptance of surfaces and conditions.

3.2 PREPARATION

A. Prepare substrates according to manufacturer's written instructions to ensure adhesion of resilient products.

B. Fill cracks, holes, and depressions in substrates with trowelable leveling and patching compound; remove bumps and ridges to produce a uniform and smooth substrate.

C. Do not install resilient products until they are the same temperature as the space where they are to be installed.

1. At least 48 hours in advance of installation, move resilient products and installation materials into spaces where they will be installed.

D. Immediately before installation, sweep and vacuum clean substrates to be covered by resilient products.

3.3 RESILIENT BASE INSTALLATION

A. Comply with manufacturer's written instructions for installing resilient base.

B. Apply resilient base to walls, columns, pilasters, casework and cabinets in toe spaces, and other permanent fixtures in rooms and areas where base is required.

C. Install resilient base in lengths as long as practical without gaps at seams and with tops of adjacent pieces aligned.

D. Tightly adhere resilient base to substrate throughout length of each piece, with base in continuous contact with horizontal and vertical substrates.

E. Do not stretch resilient base during installation.

F. On masonry surfaces or other similar irregular substrates, fill voids along top edge of resilient base with manufacturer's recommended adhesive filler material.

G. Preformed Corners: Install preformed corners before installing straight pieces.

H. Job-Formed Corners:

1. Outside Corners: Use straight pieces of maximum lengths possible and form with returns not less than 3 inches length.

a. Form without producing discoloration (whitening) at bends.

2. Inside Corners: Use straight pieces of maximum lengths possible and form with returns not less than 3 inches > in length.

a. Miter or cope corners to minimize open joints.

3.4 CLEANING AND PROTECTION

A. Comply with manufacturer's written instructions for cleaning and protecting resilient products.

END OF SECTION 096513

SECTION 09912 - INTERIOR PAINTING

1.1 FILED SUB-BID REQUIRED

A. A. Sub-bids for work under this Section shall be for the complete work and shall be filed in a sealed envelope with the Awarding Authority at a time and place as stipulated in the "ADVERTISEMENT FOR BID". The following shall appear on the upper left hand corner of the envelope:

NAME OF SUB-BIDDER: _____

PROJECT: _____

SUB-BID FOR SECTION: _____

(No. and Title of Section)

B. Each Sub-Bid submitted for work under this Section shall be on forms furnished herein, as required by Section 44F of Chapter 149 of the General Laws, as amended.

C. Sub-Bids filed with the Awarding Authority shall be accompanied by a BID BOND, CASH, CHECK, or a TREASURER'S or CASHIER'S CHECK issued by a responsible bank or trust company payable to the CITY OF GREENFIELD in the amount of five percent of the bid. A Sub-Bid accompanied by any other form of bid deposit than those specified will be rejected.

PART 2 - GENERAL

2.1 RELATED DOCUMENTS

A. Drawings and general provisions of the Contract, including General and Supplementary Conditions and Division 01 Specification Sections, apply to this Section.

2.2 SUMMARY

A. Section includes surface preparation and the application of paint systems on interior substrates.

1. Concrete.
2. Steel.
3. Galvanized metal.
4. Wood.
5. Gypsum board.

B. Related Requirements:

1. Section 05120 "Structural Steel" for shop priming of metal substrates with primers specified in this Section.

2.3 DEFINITIONS

A. Gloss Level 1: Not more than 5 units at 60 degrees and 10 units at 85 degrees, according to ASTM D 523.

B. Gloss Level 2: Not more than 10 units at 60 degrees and 10 to 35 units at 85 degrees, according to ASTM D 523.

C. Gloss Level 3: 10 to 25 units at 60 degrees and 10 to 35 units at 85 degrees, according to ASTM D 523.

D. Gloss Level 4: 20 to 35 units at 60 degrees and not less than 35 units at 85 degrees, according to ASTM D 523.

E. Gloss Level 5: 35 to 70 units at 60 degrees, according to ASTM D 523.

F. Gloss Level 6: 70 to 85 units at 60 degrees, according to ASTM D 523.

G. Gloss Level 7: More than 85 units at 60 degrees, according to ASTM D 523.

2.4 ACTION SUBMITTALS

A. Product Data: For each type of product. Include preparation requirements and application instructions.

B. Samples for Initial Selection: For each type of topcoat product.

C. Samples for Verification: For each type of paint system and in each color and gloss of topcoat.

1. Submit Samples on rigid backing, 8 inches (200 mm) square.
2. Step coats on Samples to show each coat required for system.
3. Label each coat of each Sample.
4. Label each Sample for location and application area.

D. Product List: For each product indicated, include the following:

1. Cross-reference to paint system and locations of application areas. Use same designations indicated on Drawings and in schedules.
2. VOC content.

2.5 QUALITY ASSURANCE

A. Mockups: Apply mockups of each paint system indicated and each color and finish selected to verify preliminary selections made under Sample submittals and to demonstrate aesthetic effects and set quality standards for materials and execution.

1. Architect will select one surface to represent surfaces and conditions for application of each paint system specified in Part 3.

   a. Vertical and Horizontal Surfaces: Provide samples of at least 100 sq. ft. (9 sq. m).
   b. Other Items: Architect will designate items or areas required.

2. Final approval of color selections will be based on mockups.

   a. If preliminary color selections are not approved, apply additional mockups of additional colors selected by Architect at no added cost to Owner.

3. Approval of mockups does not constitute approval of deviations from the Contract Documents contained in mockups unless Architect specifically approves such deviations in writing.
4. Subject to compliance with requirements, approved mockups may become part of the completed Work if undisturbed at time of Substantial Completion.

2.6 DELIVERY, STORAGE, AND HANDLING

A. Store materials not in use in tightly covered containers in well-ventilated areas with ambient temperatures continuously maintained at not less than 45 deg F (7 deg C).

1. Maintain containers in clean condition, free of foreign materials and residue.
2. Remove rags and waste from storage areas daily.

2.7 FIELD CONDITIONS

A. Apply paints only when temperature of surfaces to be painted and ambient air temperatures are between 50 and 95 deg F (10 and 35 deg C).

B. Do not apply paints when relative humidity exceeds 85 percent; at temperatures less than 5 deg F (3 deg C) above the dew point; or to damp or wet surfaces.

PART 3 - PRODUCTS

3.1 MANUFACTURERS

A. Manufacturers: Subject to compliance with requirements, available manufacturers offering products that may be incorporated into the Work include, but are not limited to, the following:

1. Benjamin Moore & Co.
2. California Paints.
3. PPG Architectural Finishes, Inc.
4. Pratt & Lambert.
5. Sherwin-Williams Company (The).

B. Products: Subject to compliance with requirements, available products that may be incorporated into the Work include, but are not limited to products listed in other Part 2 articles for the paint category indicated.

3.2 PAINT, GENERAL

A. Material Compatibility:

1. Provide materials for use within each paint system that are compatible with one another and substrates indicated, under conditions of service and application as demonstrated by manufacturer, based on testing and field experience.
2. For each coat in a paint system, provide products recommended in writing by manufacturers of topcoat for use in paint system and on substrate indicated.

B. VOC Content: Products shall comply with VOC limits of authorities having jurisdiction and, for interior paints and coatings applied at Project site, the following VOC limits, exclusive of colorants added to a tint base, when calculated according to 40 CFR 59, Subpart D (EPA Method 24).

1. Flat Paints and Coatings: 50 g/L.
2. Nonflat Paints and Coatings: 150 g/L.
3. Dry-Fog Coatings: 400 g/L.
4. Primers, Sealers, and Undercoaters: 200 g/L.

5. Anticorrosive and Antirust Paints Applied to Ferrous Metals: 250 g/L.
6. Zinc-Rich Industrial Maintenance Primers: 340 g/L.
7. Pretreatment Wash Primers: 420 g/L.
8. Floor Coatings: 100 g/L.
9. Shellacs, Clear: 730 g/L.
10. Shellacs, Pigmented: 550 g/L.

C. Low-Emitting Materials: Interior paints and coatings shall comply with the testing and product requirements of the California Department of Health Services' "Standard Practice for the Testing of Volatile Organic Emissions from Various Sources Using Small-Scale Environmental Chambers."

D. Colors: As selected by Architect.

1. Allow for four wall colors.

3.3 PRIMERS/SEALERS

A. Primer Sealer, Interior, Institutional Low Odor/VOC: MPI #149.

B. Wood-Knot Sealer: Sealer recommended in writing by topcoat manufacturer for use in paint systems indicated.

3.4 METAL PRIMERS

A. Primer, Rust-Inhibitive, Water Based: MPI #107.

B. Primer, Galvanized, Water Based: MPI #134.

3.5 WATER-BASED PAINTS

A. Latex, Interior, Institutional Low Odor/VOC, Flat (Gloss Level 1): MPI #143.

B. Latex, Interior, Institutional Low Odor/VOC, (Gloss Level 2): MPI #144.

C. Latex, Interior, Institutional Low Odor/VOC, (Gloss Level 3): MPI #145.

D. Latex, Interior, Institutional Low Odor/VOC, Semi-Gloss (Gloss Level 5): MPI #147.

3.6 FLOOR COATINGS

A. Sealer, Water Based, for Concrete Floors: MPI #99.

PART 4 - EXECUTION

4.1 EXAMINATION

A. Examine substrates and conditions, with Applicator present, for compliance with requirements for maximum moisture content and other conditions affecting performance of the Work.

B. Maximum Moisture Content of Substrates: When measured with an electronic moisture meter as follows:

1. Concrete: 12 percent.
2. Masonry (Clay and CMU): 12 percent.
3. Wood: 15 percent.
4. Gypsum Board: 12 percent.

C. Gypsum Board Substrates: Verify that finishing compound is sanded smooth.

D. Verify suitability of substrates, including surface conditions and compatibility with existing finishes and primers.

E. Proceed with coating application only after unsatisfactory conditions have been corrected.

1. Application of coating indicates acceptance of surfaces and conditions.

4.2 PREPARATION

A. Comply with manufacturer's written instructions and recommendations in "MPI Manual" applicable to substrates indicated.

B. Remove hardware, covers, plates, and similar items already in place that are removable and are not to be painted. If removal is impractical or impossible because of size or weight of item, provide surface-applied protection before surface preparation and painting.

1. After completing painting operations, use workers skilled in the trades involved to reinstall items that were removed. Remove surface-applied protection if any.

C. Clean substrates of substances that could impair bond of paints, including dust, dirt, oil, grease, and incompatible paints and encapsulants.

1. Remove incompatible primers and reprime substrate with compatible primers or apply tie coat as required to produce paint systems indicated.

D. Concrete Substrates: Remove release agents, curing compounds, efflorescence, and chalk. Do not paint surfaces if moisture content or alkalinity of surfaces to be painted exceeds that permitted in manufacturer's written instructions.

E. Steel Substrates: Remove rust, loose mill scale, and shop primer, if any. Clean using methods recommended in writing by paint manufacturer**.**

F. Shop-Primed Steel Substrates: Clean field welds, bolted connections, and abraded areas of shop paint, and paint exposed areas with the same material as used for shop priming to comply with SSPC-PA 1 for touching up shop-primed surfaces.

G. Galvanized-Metal Substrates: Remove grease and oil residue from galvanized sheet metal fabricated from coil stock by mechanical methods to produce clean, lightly etched surfaces that promote adhesion of subsequently applied paints.

H. Aluminum Substrates: Remove loose surface oxidation.

I. Wood Substrates:

1. Scrape and clean knots, and apply coat of knot sealer before applying primer.

2. Sand surfaces that will be exposed to view, and dust off.
3. Prime edges, ends, faces, undersides, and backsides of wood.
4. After priming, fill holes and imperfections in the finish surfaces with putty or plastic wood filler. Sand smooth when dried.

4.3 APPLICATION

A. Apply paints according to manufacturer's written instructions and to recommendations in "MPI Manual."

1. Use applicators and techniques suited for paint and substrate indicated.
2. Paint surfaces behind movable equipment and furniture same as similar exposed surfaces. Before final installation, paint surfaces behind permanently fixed equipment or furniture with prime coat only.
3. Paint front and backsides of access panels, removable or hinged covers, and similar hinged items to match exposed surfaces.
4. Do not paint over labels of independent testing agencies or equipment name, identification, performance rating, or nomenclature plates.
5. Primers specified in painting schedules may be omitted on items that are factory primed or factory finished if acceptable to topcoat manufacturers.

B. Tint each undercoat a lighter shade to facilitate identification of each coat if multiple coats of same material are to be applied. Tint undercoats to match color of topcoat, but provide sufficient difference in shade of undercoats to distinguish each separate coat.

C. If undercoats or other conditions show through topcoat, apply additional coats until cured film has a uniform paint finish, color, and appearance.

D. Apply paints to produce surface films without cloudiness, spotting, holidays, laps, brush marks, roller tracking, runs, sags, ropiness, or other surface imperfections. Cut in sharp lines and color breaks.

E. Painting Fire Suppression, Plumbing, HVAC, Electrical, Communication, and Electronic Safety and Security Work:

1. Paint the following work where exposed in equipment rooms:

a. Equipment, including panelboards.
b. Uninsulated metal piping.
c. Pipe hangers and supports.
d. Metal conduit.
e. Tanks that do not have factory-applied final finishes.
f. Duct, equipment, and pipe insulation having cotton or canvas insulation covering or other paintable jacket material.

2. Paint the following work where exposed in occupied spaces:

a. Equipment, including panelboards.
b. Uninsulated metal piping.
c. Pipe hangers and supports.
d. Metal conduit.
e. Duct, equipment, and pipe insulation having cotton or canvas insulation covering or other paintable jacket material.
f. Other items as directed by Architect.

3. Paint portions of internal surfaces of metal ducts, without liner, behind air inlets and outlets that are visible from occupied spaces.

4.4 FIELD QUALITY CONTROL

A. Dry Film Thickness Testing: Owner may engage the services of a qualified testing and inspecting agency to inspect and test paint for dry film thickness.

1. Contractor shall touch up and restore painted surfaces damaged by testing.
2. If test results show that dry film thickness of applied paint does not comply with paint manufacturer's written recommendations, Contractor shall pay for testing and apply additional coats as needed to provide dry film thickness that complies with paint manufacturer's written recommendations.

4.5 CLEANING AND PROTECTION

A. At end of each workday, remove rubbish, empty cans, rags, and other discarded materials from Project site.

B. After completing paint application, clean spattered surfaces. Remove spattered paints by washing, scraping, or other methods. Do not scratch or damage adjacent finished surfaces.

C. Protect work of other trades against damage from paint application. Correct damage to work of other trades by cleaning, repairing, replacing, and refinishing, as approved by Architect, and leave in an undamaged condition.

D. At completion of construction activities of other trades, touch up and restore damaged or defaced painted surfaces.

4.6 INTERIOR PAINTING SCHEDULE

A. Steel Substrates:

1. Institutional Low-Odor/VOC Latex System:

a. Prime Coat: Primer, rust-inhibitive, water based MPI #107.
b. Intermediate Coat: Latex, interior, institutional low odor/VOC, matching topcoat.
c. Topcoat: Latex, interior, institutional low odor/VOC, semi-gloss (Gloss Level 5), MPI #147.

B. Galvanized-Metal Substrates:

1. Institutional Low-Odor/VOC Latex System:

a. Prime Coat: Primer, galvanized, water based, MPI #134.
b. Intermediate Coat: Latex, interior, institutional low odor/VOC, matching topcoat.
c. Topcoat: Latex, interior, institutional low odor/VOC, semi-gloss (Gloss Level 5), MPI #147.

C. Wood Substrates: Including wood trim, architectural woodwork, doors, windows and wood-based panel products.

1. Latex System:

2. Institutional Low-Odor/VOC Latex System:

   a. Prime Coat: Primer, latex, for interior wood, MPI #39.
   b. Intermediate Coat: Latex, interior, institutional low odor/VOC, matching topcoat.
   c. Topcoat: Latex, interior, institutional low odor/VOC, (Gloss Level 3), MPI #145.
   d. Topcoat: Latex, interior, institutional low odor/VOC, semi-gloss (Gloss Level 5), MPI #147.

D. Wood Substrates, Natural Finish:

1. Clear Varnish System:

   a. Prime Coat: Sanding sealer
   b. Intermediate Coat: Clear Polyurethane satin varnish, MPI #57
   c. Topcoat: Clear Polyurethane satin varnish, MPI #57

E. Gypsum Board Substrates:

1. Institutional Low-Odor/VOC Latex System:

   a. Prime Coat: Primer sealer, interior, institutional low odor/VOC, MPI #149.
   b. Intermediate Coat: Latex, interior, institutional low odor/VOC, matching topcoat.
   c. Topcoat: Latex, interior, institutional low odor/VOC, flat (Gloss Level 1), MPI #143.
   d. Topcoat: Latex, interior, institutional low odor/VOC, (Gloss Level 3), MPI #145.

END OF SECTION 09911

TABLE OF CONTENTS
Greenfield School Administration Office Project - Greenfield, MA
April 27, 2016

Pricing Set

231001	SUMMARY OF WORK
231006	ALTERNATES
231007	DEFINITIONS AND STANDARDS
231010	BASIC REQUIREMENTS
231030	ELECTRICAL REQUIREMENTS
231040	DEMOLITION
231055	BASIC MATERIALS AND METHODS
231084	FIRESTOPPING FOR MECHANICAL SYSTEMS
231100	VALVES
231125	EXPANSION COMPENSATION
231140	SUPPORTS AND ANCHORS
231150	SEISMIC RESTRAINTS
231190	IDENTIFICATION
231250	INSULATION
231510	HYDRONIC PIPING AND SPECIALTIES
231535	CONDENSATE DRAIN SYSTEM
231675	VRF MULTIZONE SPLIT SYSTEM HEAT PUMPS
231830	TERMINAL UNITS
231890	METAL DUCTWORK AND ACCESSORIES
231933	AIR TERMINALS
231971	DIRECT DIGITAL CONTROL SYSTEM
231985	SEQUENCE OF OPERATION
231990	TESTING, ADJUSTING AND BALANCING

SECTION 231001 - SUMMARY OF WORK

Part 1 - GENERAL

Identification: Refer to the Contract (Owner-Contractor Agreement) for name location, project number and abbreviated identification of the work of the project.

Contract Documents: Requirements of the work are contained in the contract documents, and include cross-references herein to published information, which is not necessarily bound therewith.

Verbal Summary of Work: Contractor to provide complete in-place mechanical systems, as shown on drawings and/or as needed for a complete and proper installation, tested and in compliance with all Federal, State and local codes for the project.

Part 2 - PRODUCTS

Not used.

Part 3 – EXECUTION

Not used.

END OF SECTION 231001

SECTION 231006 - ALTERNATES

Part 1 - GENERAL

Alternates: An alternate is an amount proposed by Bidders and stated on the Bid Form that will be added to or deducted from Base Bid amount if the Owner decides to accept a corresponding change in either scope of work or in products, materials, equipment, systems or installation methods described in Contract Documents.

Coordination: Coordinate related work and modify or adjust adjacent work as required to ensure that work affected by each accepted alternate is complete and fully integrated into the project.

Notification: Immediately following award of Contract, prepare and distribute to each party involved, notification of the status of each alternate. Indicate whether alternates have been accepted, rejected or deferred for consideration at a later date. Include a complete description of negotiated modifications to alternates, if any.

Part 2 - PRODUCTS

Not used.

Part 3 - EXECUTION

Schedule: A "Schedule of Alternates" is included at the end of this section.

Include as part of each alternate, miscellaneous devices, appurtenances and similar items incidental to or required for a complete installation whether or not mentioned as part of the alternate.

END OF SECTION 231006 (4/25/16)

MECHANICAL ALTERNATES
Greenfield School Administration Office Project - Greenfield, MA

Deduct Alternates

M-1 (This bid alternate is not recommended by Engineer.) Delete the removal of VAV-3 and the addition of the new VAV box systems VAV-125, and VAV-125A; delete the removal of VAV-12 and the addition of new VAV box systems 126, 126A, 126B, and 126C.

Rebalance existing VAV boxes and relocate existing room temperature sensors as follows:

	Min. CFM	Max. CFM	RHT CFM	Sensor Location
VAV-3	50	70	30	Room 125A
VAV-12	100	1620	600	Room 126C

Rebalance supply and return registers as shown on drawings.

SECTIONS 231007 - DEFINITIONS AND STANDARDS

Part 1 - GENERAL

Definitions

General Requirements: Provisions of Division-1 sections, General Requirements, apply to the entire work of the Contract.

Indicated: Shown on drawings or written into other portions of contract documents.

Approved by Architect/Engineer: In no case releases Contractor from responsibility to fulfill requirements of contract documents.

Furnish: Supply and deliver to project site, ready for unloading, unpacking, assembly, installation, and similar subsequent requirements.

Install: Operations at project site, including unloading, unpacking, assembly, erection, placing, anchoring, applying, working to dimension, finishing, curing, protecting, cleaning, and similar requirements.

Provide: Furnish and install, complete and ready for intended use.

Coordinate: Work together harmoniously in a common action or effort to accomplish specified work.

Installer: Entity (firm or person) engaged to install work, by Contractor, subcontractor or sub-subcontractor. Installers are required to be skilled in work they are engaged to install.

Specification Text Format: Imperative language is directed at Contractor, unless otherwise noted.

Overlapping/Conflicting Requirements: Most stringent (generally) requirement written directly into contract documents is intended and will be enforced, unless specifically detailed language written into the contract documents clearly indicates that a less stringent requirement is acceptable. Refer uncertainties to Architect/Engineer for decision before proceeding.

Minimum Requirements: Indicated requirements are for a specific minimum acceptable level of quality/quantity, as recognized in the industry. Actual work must comply (within specified tolerances), or may exceed minimums within reasonable limits. Refer uncertainties to Architect/Engineer before proceeding.

Abbreviations, Plural Words: Abbreviations, where not defined in contract documents, will be interpreted to mean the normal construction industry terminology, determined by recognized grammatical rules, by the Architect/Engineer. Plural words will be interpreted as singular and singular words will be interpreted as plural where applicable for context of contract documents.

Change Orders: All change order proposals by Contractor must include a complete breakdown of time, hourly rate, materials cost, and overhead/profit markups.

Testing Laboratory: An independent entity engaged for the project to provide inspections, tests, interpretations, reports and similar services.

Standards and Regulations

Industry Standards: Applicable standards of construction industry have same force and effect on performance of the work as if copied directly into contract documents or bound and published therewith. Standards referenced in contract documents or in governing regulations have precedence over non-referenced standards, insofar as different standards may contain overlapping or conflicting requirements. Comply with standards in effect as of date of contract documents, unless otherwise indicated.

Part 2 - PRODUCTS

Not used.

Part 3 - EXECUTION

Not used.

END OF SECTION 231007

SECTION 231010 - BASIC REQUIREMENTS

Part 1 - GENERAL

Related Documents

The general provisions of Contract, including General and Supplemental General Conditions of the Contract and Division 1 Specification Sections, apply to this Section and to all Contractors, Subcontractors, or other persons supplying materials and/or labor, entering into the Project site and/or premises, directly or indirectly.

The Specifications and Drawings are intended to be complementary. A particular section, paragraph or heading in a Division may not describe each and every detail concerning work to be done and materials to be furnished. The Drawings are diagrammatic and may not show all of the work required or all construction details. Dimensions are shown for critical areas only; all dimensions and actual placements are to be verified in the field. It is to be understood that the best trade practices of the Division will prevail.

All trade subcontractors are to note that the organization of these Specifications into divisions, sections, and paragraphs, and likewise the arrangement of the Drawings, is set up for the convenience of understanding the scope of the Work only. This structuring shall not control the General Contractor in dividing the Work among trade subcontractors or in establishing the extent of the Work to be performed by any trade.

Commissioning Requirements

Where there is a third party Commissioning Agent, Contractor shall comply with the commissioning requirements specified in various Divisions, Sections, and Schedules, as provided by the Commissioning Agent. These Sections and Schedules may include, but shall not be limited to, Project Closeout; Operations and Maintenance Data; Direct Digital Control System; Testing, Adjusting and Balancing; Mechanical Systems Commissioning; Prefunctional Checklists; and Commissioning Requirements. Each of these Sections and Schedules, including those that are part of Division 23, shall include the name of the Commissioning Agent, and Contractor shall direct any questions regarding these requirements to the Commissioning Agent.

Reference Symbols

Symbols shown on the drawings show approximate location of fixtures, ductwork, piping, and other equipment, unless otherwise detailed. The exact location will be governed by structural conditions, appearance and obstructions. This is not to be construed so as to permit redesigning systems.

It is not intended that the drawings show in detail every fitting and appurtenance, etc., but all material necessary to complete the systems in accordance with the practices of the trade and to the complete satisfaction of the Architect will be provided without additional recompense under this Division of the specifications.

No deviations from the layout will be made without written approval of the Architect.

Conflicting Requirements

In case of overlapping or conflicting requirements or indications of any type, in any part or parts of any of the Contract Documents, follow the most expensive/stringent version unless approved otherwise in writing by Engineer.

Submittals

Shop Drawings and Product Data: Refer to Division 1 for requirements. The following paragraphs supplement the requirements of Division 1, when not in conflict with them.

Submittal Binder. Submit to Mechanical Engineer all mechanical shop drawings and product data at one time to the extent reasonably possible, organized by specification section. (If there are a few long lead time products, it is acceptable to submit them early before the rest of the submittal is assembled. Controls submittals often come later.)

Digital Submittals. All submittals shall be issued to the engineer in digital "PDF" format. Submittals shall either be a single file (broken into multiple parts to keep file sizes below 20 MB) or with a separate file for each specification section. If submitted with separate files for each section use the specification number as a prefix, such as "231540_Pumps" so that files can be sorted by section. Digital submittals may be sent via mail on CD-R discs or flash drives or they may be issued through an FTP site or other online hosting site for the engineer to download. If files are issued for download they must be uploaded in a "zip file" or similar, in such a way that all submittal files can be downloaded with a single click.

Controls Submittal: It is requested that a paper copy of the controls submittal be provided in addition to the digital copy.

Submittal Contents. For all proposed products, submittal data must include the complete model number and all required options and accessories, such as size, material, and finish. For proposed products that are not an exact match to a specified model number, submittal data must also show in writing all features and required options listed in the Specifications and in the Schedules. For all products, any specified requirements that are not met by the proposed product shall be specifically listed and noted. Provide shop drawings of mechanical room layout as part of the submittal package.

See "Part 3 – Execution" for requirements for the submittal process.

Record Documents: Refer to Division 1 for requirements. The following paragraphs supplement the requirements of Division 1.

Provide a new, complete clean set of CAD generated mechanical/plumbing drawings to indicate, in a distinctive CAD generated line weight, revisions to piping and ductwork, size and location both exterior and interior; including locations of coils, dampers and other control devices, filters, boxes, and similar units requiring periodic maintenance or repair; actual equipment locations, dimensioned for column lines; actual inverts and locations of underground piping; concealed equipment, dimensioned to column lines; mains and branches of piping systems, with valves and control devices located and numbered, concealed unions located, and with items requiring maintenance located (i.e., traps, strainers, expansion compensators, tanks, etc.); Change Orders; concealed control system devices.

Provide an additional drawing(s) as required showing equipment schedule summaries in table format of all major installed HVAC equipment and for plumbing items if specifically requested by Owner.

Bind drawings into a set with a cover sheet indicating the job name and location, and the name and address of the Contractor. Also provide a copy of the as-built drawings on CD.

Mark Specifications to indicate approved substitutions; Change Orders; actual equipment and materials used.

HVAC System Completion. Prior to the issuance of a Certificate of Occupancy, the Contractor shall provide evidence of system completion as follows:

Air System Balancing Report.
Hydronic System Balancing Report.
Manuals. An operating and maintenance manual shall be provided to the building Owner by the Mechanical Contractor. The manual shall include, but not be limited to, the following:

1. Equipment capacity (input and output) and required maintenance actions.
2. Equipment operation and maintenance manuals.
3. HVAC system control maintenance and calibration information, including wiring diagrams, schematics and control sequence descriptions. Desired or field-determined setpoints shall be permanently recorded on control drawings, at control devices or, for digital control systems, in programming comments accessible to the Owner.

Operation and Maintenance Data: Refer to the Division 1 Section for procedures and requirements for preparation and submittal of maintenance manuals. In addition to the information required by Division 1 for Maintenance Data, include the following information:

Manufacturer's printed operating procedures to include start-up, break-in, routine and normal operating instructions; regulation, control, stopping, shut-down, and emergency instructions; and summer and winter operating instructions.

Maintenance procedures for routine preventative maintenance and troubleshooting; disassembly, repair, and reassembly; aligning and adjusting instructions.

Servicing instructions and lubrication charts and schedules.

A periodic preventative maintenance and inspection schedule for each system and for the components in the system, listing inspection and maintenance operations to be performed daily, weekly, monthly, quarterly and annually as required to provide for long life and faithful performance of the systems. The schedule shall be prepared by the Mechanical Contractor. It shall be presented in a concise 8-1/2x11 chart format to serve as a checklist for maintenance personnel. (Copies of manufacturer's product literature do not satisfy this requirement.)

One copy of the valve charts in clear plastic covers and one copy bound in each operating and maintenance manuals.

Warranties: Compile and assemble the warranties specified in Division 23, into a separated set of three ring binders, tabulated and indexed for easy reference.

Provide complete warranty information for each item of product or equipment to include date of beginning of warranty or bond; duration of warranty or bond; and names, addresses, and telephone numbers and procedures for filing a claim and obtaining warranty services.

Quality Assurance

Permits and Inspections: Refer to General Conditions and Requirements.

Codes: Refer to the General Conditions and Requirements. Comply with the applicable requirements of the applicable editions of the following publications in addition to codes referenced elsewhere in this Division.

International Plumbing Code

International Mechanical Code

NFPA

Life Safety Code

State Energy Codes as applicable, including Vermont Commercial Building Energy Standards (VT), IECC (NH, MA), and Ashrae 90.1 (MA).

Applicable State and Local Codes

Delivery, Storage, and Handling

Deliver products to project in the manufacturer's original, unopened packages and containers properly identified with names, model numbers, types, grades, compliance labels, and similar information needed for distinct identifications; adequately packaged and protected to prevent damage during shipment, storage, and handling.

Coordinate delivery of materials supplied by Contractor to be built into work done by others to avoid delay.

Coordinate deliveries of mechanical materials and equipment to minimize construction site congestion. Limit each shipment of materials and equipment to the items and quantities needed for the smooth and efficient flow of installations.

Store equipment and materials at the site, unless off-site storage is authorized in writing. Storage of materials and equipment on-site will be in a clean, well-ventilated area designated by General Contractor. Protect stored equipment and materials from damage.

Part 2 - PRODUCTS

General Product Requirements: Provide products as indicated and as required for a complete system. Products must comply with every item of the descriptions in the Specifications and in the Schedules. In case of a discrepancy between the specified make/model and the description, the more expensive/stringent version shall prevail.

Manufacturers: Comply with Division One requirements. For products not specified by make and model number, or for those so specified but accompanied by the term "or equal," Contractor may propose any available products that comply with the Contract Documents.

Many products are specified by make and model number. The designation of a specific manufacturer or manufacturer's product in the Mechanical Schedules is for the purpose of establishing the minimum requirements for the mechanical equipment specified. Provide either the product designated, or, where more than one manufacturer is listed, the equal product of one of the other listed manufacturers that complies with minimum requirements, warranty coverage, utility connections, capacity, type of construction, available finishes, available colors, operational features, accessories, controls, efficiency, energy consumption, and availability, etc. Note that where an alternate manufacturer is listed without a model number, there may or may not be an "equal" product available. In all cases, all products within a given type must be from a single manufacturer. It shall be the contractor's responsibility to provide all necessary information for comparison.

Substitutions: Where a product is specified by make and model number, products from manufacturers not listed are not allowed except as follows: Contractors wishing to substitute comparable products by manufacturers not listed must submit a written request to the Mechanical Engineer for approval at least ten (10) days prior to the date for receipt of Bids. Each such request shall include catalog data and any other information necessary for a complete evaluation. Any deviations from the product specified must be noted.

The Contractor shall be solely responsible for coordinating the installation of accepted substitutions of comparable products making such changes as may be required for the work to be completed in all respects. Any additional cost, or any loss or damage arising from the substitution of any material or method for those originally specified shall be borne by the Contractor, not withstanding approval or acceptance of such substitution by the Owner, Architect or Mechanical Engineer, unless such substitution was made at the written request or direction of the Owner, Architect or Mechanical Engineer.

Manufacturers--Control Systems: Because Automatic Temperature Control (ATC) contractors usually use the products of a single major control system manufacturer, the specification of a control manufacturer is virtually the same as specifying an ATC contractor. Therefore, in this Specification, control system manufacturers and ATC contractors are specified jointly.

The Engineer has completed a pre-qualification process for all known ATC contractors in the project area. Pre-qualified firms are listed in the control system Section of this Division. The criteria for being approved are for the ATC contractor to:

(1) Have good company resources, including physical facilities, organizational structure, experienced personnel, positive references, and geographic coverage including the current project location. Contractor must be an authorized branch office or distributor (such as Johnson Controls ABCS) of Manufacturer. Contractor must maintain a commercial office and be

accessible via telephone, receptionist, and/or pager; and installers/service technician(s) for the project must be located within 100 miles of the project site.

(2) Have a good record of similar project experience, including size of projects, quality of work, timely performance of work, change order fairness, response to and documentation for submittal reviews and punch lists, warrantee performance, and coordination and cooperation with other contractors.

(3) Be able to provide products and documentation in compliance with the Contract Documents.

Firms shall demonstrate compliance with these criteria by the following steps.

Step 1. Provide general information to the Engineer as follows: a) company brochure or resume describing physical facilities, organizational structure, personnel at each site, years of experience, education and training of key people, etc. b) up to five letters of recommendation from satisfied Owners, Architects, Mechanical Contractors, or Engineers, during the last five years. c) geographic area in which work is conducted. (d) letter or publication from Manufacturer describing the relationship between Manufacturer and Contractor.

Step 2. Receive a net positive recommendation from mechanical contractors surveyed by the Engineer. That is, receive more "recommended" than "not recommended" evaluations. (The survey of mechanical contractors will be updated at least every three years.) Secondly, have experience with at least one similar project of similar or larger size within the last five years. Finally, have a record of satisfactory performance on previous Kohler & Lewis projects (if any) within the last five years.

Step 3. For those contractors who successfully complete Steps 1 and 2: attend a minimum four-hour meeting at the Engineer's office in Keene to discuss the company's products and their compliance with the Kohler and Lewis Specifications. Provide Engineer with all requested product information in format as requested, and provide continual updates as required. Provide all requested product samples.

Other firms who have not yet been evaluated may submit to Engineer a written request to be listed a minimum of fourteen days before the bid. Included in the request must be complete information for Step 1. The Engineer will pursue Step 2 and, if positive, conduct the meeting (Step 3). Approved Contractors will then be added to the list by addendum prior to the bid.

Part 3 - EXECUTION

Preparation

Pre-bid Site Visit: The Contractor, before submitting a proposal, shall visit the site with plans and specifications in hand to determine the conditions under which work will be performed. No request for extra compensation will be considered for hardships encountered that would have been disclosed or made evident by a reasonable examination of the site.

Pre-submittal Meeting: The Engineer is available to meet with the Contractor at the office of the Engineer in Keene, N.H. to review in person the first draft of the submittals (prior to formal submission), and for assistance as requested in other aspects of the project. The Engineer has found that this meeting

significantly expedites the submittal preparation and review process, and results in fewer time-consuming and potentially expensive errors.

Submittal Process: Refer to Division 1 for requirements. The following paragraphs supplement the requirements of Division 1, when not in conflict with them.

Prior Contractor Review: Submittal of shop drawings, product data, and samples will be accepted only when stamped or indicated "Approved," “Reviewed, ” or “No Exception Taken” by the Contractor in accordance with the provisions of “Shop Drawings, Product Data and Samples” Section of AIA Document A201 and Division 1 “SUBMITTALS”. Data submitted from subcontractors and material suppliers directly to the Architect/Engineer will not be processed. The Contractor is responsible for: noting any omissions in the submittal; confirming and correlating all quantities, weights and dimensions; selecting fabrication processes and techniques of construction; and coordinating work with that of all other trades. Where an alternate manufacturer is submitted, Contractor shall verify that the alternate product has all the features and required options as specified, and that these features and options are shown on the submittal, and that all dimensions are compatible, and shall make all required adjustments at no extra cost to Owner.

Engineer Review: The Engineer will review submittals to check general conformance with the Contract Documents. This review in no way relieves the Contractor of responsibility to comply with the Contract Documents as described above and elsewhere.

Coordination: Coordinate equipment and materials installation with other building components.

Coordinate exact location of exposed ducts, pipes, and equipment with Architect before installation.

Verify all dimensions by field measurements.

Arrange for chases, slots, and openings in other building components to allow for mechanical installations.

Coordinate the installation of required supporting devices and sleeves to be set in poured in place concrete and other structural components, as they are constructed.

Coordinate the cutting and patching of building components to accommodate the installation of mechanical equipment and materials.

Coordinate the installation of mechanical materials and equipment above ceilings with suspension system, light fixtures, and other installations.

Coordinate connection of mechanical systems with exterior underground and overhead utilities and services. Comply with requirements of governing regulations, franchised service companies, and controlling agencies. Provide required connection for each service.

Installation

General: Install products in accordance with manufacturer’s written instructions. Comply with manufacturer’s recommendations for types of materials, project conditions, and intended use. Coordinate

the installation in accordance with final shop drawings, field measurements, manufacturer's data, and as specified herein. Refer to Division-1 Section on "Project Coordination" Paragraph 3.1.

Sequence, coordinate, and integrate installations of mechanical materials and equipment for efficient flow of the Work. Give particular attention to large equipment requiring positioning prior to closing-in the building.

Where mounting heights are not detailed or dimensioned, install mechanical services and overhead equipment to provide the maximum headroom possible.

Install mechanical equipment to facilitate maintenance and repair or replacement of equipment components. As much as practical, connect equipment for ease of disconnecting, with minimum of interference with other installations.

Access: Install equipment and materials to provide required access for servicing and maintenance.
Install access panel or doors where units are concealed behind finished surfaces. Access panels and doors are specified in Division 23 Section 231055 "BASIC MECHANICAL MATERIALS AND METHODS."

Coordinate the final location of concealed equipment and devices requiring access with final location of required access panels and doors. Allow ample space for removal of all parts that require replacement or servicing. Extend all grease fittings to an accessible location.

Install all horizontal cabinet unit heaters, fan coils, and unit ventilators mounted in spaces with finished ceilings such that the bottom of the unit is flush with the ceiling in order to permit access for maintenance and filter changes. Coordinate the exact locations with the reflected ceiling plan where available.

Where units are suspended from a high ceiling, ensure that they are accessible via a lift, catwalk, ladder, etc. as coordinated with Owner.

Rough-In: Verify final locations for rough-ins with field measurements and with the requirements of the actual equipment to be connected. Refer to equipment specifications for rough-in requirements.

Cutting and Patching

Do not endanger or damage installed Work through procedures and processes of cutting and patching.

Arrange for repairs required to restore other work, because of damage caused as a result of mechanical installations.

No additional compensation will be authorized for cutting and patching Work that is necessitated by ill-timed, defective, or non-conforming installations.

Perform cutting, fitting, and patching of mechanical equipment and materials required to:

Uncover Work to provide for installation of ill-timed Work;

Remove and replace defective Work;

Remove and replace Work not conforming to requirements of the Contract Documents;

Remove samples of installed Work as specified for testing;
Install equipment and materials in existing structures; and

Upon written instructions from the Architect/Mechanical Engineer, uncover and restore Work to provide for Architect/Mechanical Engineer observation of concealed Work.

Cut, remove and legally dispose of selected mechanical equipment, components, and materials as indicated, including, but not limited to removal of mechanical piping, heating units, plumbing fixtures and trim, and other mechanical items made obsolete by the new Work.

Protect the structure, furnishings, finishes, and adjacent materials not indicated or scheduled to be removed.

Locate identify, and protect mechanical and electrical services passing through remodeling or demolition area and serving other areas required to be maintained operational. When transit services must be interrupted, provide temporary services for the affected areas and notify the Owner prior to changeover.

Air Sealing

Identify and properly seal all penetrations through the building air barrier system as described in the Air Barriers section of the specifications.

Temporary Heat

Refer to other Division-23 Sections for additional requirements when utilizing HVAC systems for temporary heat (when allowed). If air-handling units must be used during construction, filtration media with a Minimum Efficiency Reporting Value (MERV) of 8 must be used at each return air grille, as determined by ASHRAE 52.2-1999. Replace all used filters for all units used for temporary heat on the day of beneficial occupancy and provide spare set of filters to the owner.

Limit heating to maintain a temperature in the space no higher than 60 ºF. If the control system is not operational, use nonadjustable temporary thermostats such as ICM Controls Model SC060 (1-207-885-9476 or 1-800-365-5525).

Protection

Initiate and maintain protection and other precautions required throughout the construction period to ensure that mechanical systems components will be free of damage or deterioration, and are visibly clean of dirt and debris at the time of Substantial Completion.

Correction of Defective Work

Promptly correct work rejected by Architect or failing to conform to requirements of the Contract Documents. Refer to General Conditions.

Work Area Clean-Up

During Construction: Keep premises and surrounding areas free from accumulation of waste materials or rubbish; Each Contractor and Subcontractor shall dispose of his waste materials and rubbish daily off site. Refer to General Conditions and applicable Division-1 Sections.

Final Clean-up: Remove waste materials, rubbish, tools, equipment, and surplus materials. Refer to General Conditions and Division-1 Sections.

Factory Start-up and Owner's Training

Provide factory start-up and Owner's training for the following equipment: Boilers, Roof Top Units, Energy Recovery Units, Air Handling Units, Chillers, Dust Collection Systems and other equipment as specified in the individual mechanical specification sections. Factory start-up and training shall be performed by the manufacturer's authorized representative. The Contractor may assist and augment the start-up and training, but in no cases shall this assistance be in lieu of the work required of the authorized factory representative.

Submit copy of "Confirmation of Factory Start-Up and Owner's Training" form signed by Owner's representative at completion of Project.

Demonstrate operation and maintenance of mechanical systems to Owner's personnel prior to completion and final payment.

Cleaning

Refer to Division-23 Section 231990 "TESTING, ADJUSTING, AND BALANCING" for requirements for cleaning filters, strainers, and mechanical systems prior to final acceptance.

Touch-up Painting

Touch-up all marred, scratched, or rusty surfaces on factory painted equipment, with touch-up paint provided by manufacturer.

Final Inspection

Final Inspection Checklist: Prior to any request for the Engineer to perform a Final Inspection of the work, or any portion thereof, the Contractor shall complete a Contractor Final Inspection Check List on a form provided by the Engineer.

END OF SECTION 231010 (revised 3/5/2015)

CONTRACTOR FINAL INSPECTION LIST

Greenfield School Administration Office Project - Greenfield, MA

Project:_____ Contractor: _____ Date: _____

Instructions: Place a check mark in the box for each line item that is complete. Use "NA" for items that are Not Applicable. Return the list and we will arrange for a final inspection.

	Item	Notes/Location
	Record-Keeping Items Have Been Submitted	
[ ]	Balance report. *(Required before Final Inspection.)* <========= **Note**	
[ ]	As-built drawings.	
[ ]	Maintenance manual in binder.	
[ ]	Maintenance and Inspection Chart.	
[ ]	Warranty (>1 yr) information in binder. (e.g. 5-yr compressor and 30-yr oil tank).	
[ ]	Spare Parts Receipt.	
[ ]	Certified Analysis of Glycol Concentration and Chemical Treatment.	
---	---	---
	Project Close-Out	
[ ]	Control system instruction to Owner completed.	
[ ]	Clean filters have been installed in units.	
[ ]	Spare Parts (filters, belts, fusible links, etc.) to owner.	
[ ]	Bypass balance valves for all three way valves have been set.	
[ ]	Seismic Bracing has been inspected by Registered Engineer.	
---	---	---
	Mechanical Room	
[ ]	Boiler cabinet is clean and free of dents.	
[ ]	Breeching is insulated.	
[ ]	Boiler chemical treatment / glycol completed.	
[ ]	Boiler reliefs are piped to floor.	
---	---	---
[ ]	Pipes are labeled.	
[ ]	Pipes are insulated; ends are sealed with vinyl clad sealer.	
[ ]	Valve tag schedule is on the wall.	
---	---	---
[ ]	Room and all equipment is clean, with packing labels removed.	
[ ]	All equipment is painted; no rusty pipes or equipment.	
[ ]	Thermometers and pressure gages are installed and oriented properly.	
[ ]	Combustion air louvers / fan installed and working.	
	Exterior Walls	
[ ]	Louvers and wall-mounted exhaust fans are sealed and free from dents.	
---	---	---
	Roof	
[ ]	Roof-mounted fan equipment is mounted securely, without vibration.	
---	---	---

	Item	Notes/Location
	Equipment, Ductwork and Piping	
[ ]	Equipment and ductwork is visibly clean of dust and debris.	
[ ]	Air handling equipment has vibration isolators and operates quietly.	
[ ]	Equipment and exposed ducts and pipes are labeled.	
---	---	---
[ ]	Ducts are sealed and insulated (spot-check in hallways).	
[ ]	Fire dampers are installed with access panels.	
[ ]	Pipes are insulated; saddles used under pipes.	
[ ]	Expansion loops have proper guides and anchors.	
---	---	---
	General Rooms	
[ ]	Cabinet unit heater and convector covers are properly fastened, and clean and have new filters where applicable.	
[ ]	Unit ventilators are neatly installed, clean,	
[ ]	Radiation covers are securely installed with all required clips, and clean.	
[ ]	Radiation end and corner caps are aligned, fastened, and clean.	
---	---	---
[ ]	Diffusers and Registers are correct and clean and mounted properly.	
[ ]	Restroom, etc. doors are undercut or have specified grilles.	
[ ]	Thermostats are installed and set, with guards where indicated.	
[ ]	Room temperature is being maintained near setpoint.	

CONFIRMATION OF FACTORY START-UP
AND OWNER'S TRAINING
Greenfield School Administration Office Project - Greenfield, MA

Owner's representative affirms that:

- He/she has read the "Factory Start-up" and "Owner's Training" paragraphs near the end of applicable specifications sections, and that
- All start-up work and training required has been provided, and has been fully satisfactory as far as can be determined at this time.
- Factory Start-up and Owner's Training sessions took place at the following place, dates, and times:

Heat Pump Systems:_____

Owner's representative: _____

Date _____

SECTION 231030 - ELECTRICAL REQUIREMENTS

Part 1 - GENERAL

Summary: This section specifies the basic requirements for electrical components for mechanical equipment. These components include, but are not limited to starters, disconnect switches and motors. It includes motors that are factory-installed as part of equipment and appliances as well as field-installed motors.

Starters, Disconnects and Variable Frequency Drives: Provide disconnects and starters and variable frequency drives as required for proper installation and operation of equipment. Confirm electrical characteristics of equipment specified with electrical installer before ordering. Coordinate starter and drive characteristics with Control Contractor. See Division 23 Section "Variable Frequency Drives."

Motors: Confirm electrical characteristics of all motors, including factory installed motors provided with pumps, air handling units, energy recovery units, condensing units, and other equipment, with Electrical Contractor before ordering.

Electrical Characteristics: Confirm electrical characteristics of all starters, disconnects, variable frequency drives, motors, and other equipment with electrical installer before ordering. This Contractor shall be responsible for all action that may be necessary (by any contractor or subcontractor) to correct any problems due to the failure of Contractor to adhere to this paragraph.

Codes and Standards: Comply with National Electrical Code (NFPA 70). Electrical components and materials shall be UL labeled.

Part 2 - PRODUCTS

Starters, Electrical Devices and Wiring

Motor Starter Characteristics: NEMA 1, general purpose enclosures with padlock ears, except in wet locations shall be NEMA 3R with conduit hubs, or units in hazardous locations which shall have NEC proper class and division. Type and size of starter shall be as recommended by motor manufacturer and the driven equipment manufacturer for applicable protection and start-up condition. All motor starters must be compatible with DDC controls.

Manual Switches Characteristics: Pilot lights and extra positions for multi-speed motors. Melting alloy type thermal overload relays where motors are not internally overload protected.

Magnetic Starters Characteristics: Maintained contact push buttons and pilot lights, properly arranged for single speed or multi-speed operation as indicated. Trip-free thermal overload relays, each phase. Interlocks, switches and similar devices as required for coordination with control requirements of Division-23 Controls sections. Built-in 120 volts control circuit transformer, fused from line side, where service exceeds 240 volts. Externally operated manual reset. Under-voltage release or protection.

Motor Connections: Flexible conduit, except where plug-in electrical cords are specifically indicated.

Disconnects

Fusible Switches: Fused, each phase; heavy duty; horsepower rated; non-teasible quick-make, quick-break mechanism; dead front line side shield; solderless lugs suitable for copper or aluminum conductors; spring reinforced fuse clips; electro silver plated current carrying parts; hinged doors; operating lever arranged for locking in the "OPEN" position; arc quenchers; capacity and characteristics as indicated.

Non-Fusible Switches: Horsepower rated; toggle switch type; quantity of poles and voltage rating as indicated. For equipment larger than 2 horsepower, switches shall be the same as fusible type.

Motors

General: Requirements below apply to motors covered by this section except as otherwise indicated.

Frequency rating: 60 Hz.

Voltage rating: Determined by voltage of circuit to which motor is connected.

Capacity: Sufficient to start and operate connected loads at designated speeds in indicated environment, and with indicated operating sequence, without exceeding nameplate ratings. Provide motors rated for continuous duty at 100 percent of rated capacity.

Temperature Rise: Based on 40ºC ambient except as otherwise indicated.

Polyphase motors

General: Squirrel-cage induction-type conforming to the following requirements except as otherwise indicated. NEMA Design Letter Designation: "B".

Motor Efficiency: Nominal efficiency equal to or greater than that listed in Minimum Three Phase Motor Efficiency Schedule for that type and rating of motor, unless otherwise stated.

Internal Thermal Overload Protection for Motors: For motors so indicated, protection automatically opens control circuit arranged for external connection. Protection operates when winding temperature exceeds safe value calibrated to the temperature rating of the motor insulation.

Bearings: Double-shielded, prelubricated ball bearings suitable for radial and thrust loading of the application.

Multi-Speed Motors: Provide separate winding for each speed

All Polyphase Motors: Corona free, inverter-duty rated, energy efficient, squirrel-cage induction, design B units with ratings, characteristics, and features coordinated with and approved by drive manufacturer.

Rugged Duty Motors: Totally enclosed with 1.25 minimum service factor. Provide motors with regreasable bearings and equipped with capped relief vents. Insulate windings with nonhygroscopic material external finish shall be chemical resistant paint over corrosion resistant primer. Provide integral condensate drains.

Motors for Reduced Inrush Starting: Coordinate with indicated reduced inrush controller type and with characteristics of drive equipment load. Provide required wiring leads in motor terminal box to suit control method.

Single Phase Motors

General: Conform to the following requirements except as otherwise indicated.

Energy Efficient Motors: One of the following types as selected to suit the starting torque and other requirement of the specific motor application.

Permanent Split Capacitor.

Split-Phase Start, Capacitor-Run.

Capacitor-Start, Capacitor-Run.

Shaded-Pole Motors: Use only for motors smaller than 1/20 hp.

Internal Thermal Overload Protection for Motors: For motors so indicated, protection automatically opens the power supply circuit to the motor, or a control circuit arranged for external connection. Protection operates when winding temperature exceeds a safe value calibrated to the temperature returns to normal range except as otherwise indicated.

Bearings: Belt connected motors and other motors with high radial forces on motor shaft shall be ball bearing type. Sealed, prelubricated sleeve bearings may be used for other single phase motors.

END OF SECTION 231030

MINIMUM 3 PHASE MOTOR EFFICIENCY SCHEDULE
Greenfield School Administration Office Project - Greenfield, MA

PROVIDE CORONA-FREE INVERTER DUTY MOTORS FOR ALL 3-PHASE MOTORS AND FOR ALL SINGLE-PHASE MOTORS TO BE USED WITH CONTINUOUS SPEED CONTROLS.

OPEN DRIP-PROOF (ODP)

SIZE (HP)	SPEED (RPM)		
	1200	1800	3600
	NEMA NOMINAL EFFICIENCY (%)		
1	82.5	85.5	80.0
1.5	86.5	86.5	85.5
2	87.5	86.5	86.5
3	89.5	89.5	86.5
5	89.5	89.5	89.5
7.5	91.7	91.0	89.5
10	91.7	91.7	90.2
15	92.4	93.0	91.0
20	92.4	93.0	92.4
25	93.0	93.6	93.0
30	93.6	94.1	93.0
40	94.1	94.1	93.6
50	94.1	94.5	93.6
60	95.0	95.0	94.1
75	95.0	95.0	94.5

TOTALLY ENCLOSED FAN-COOLED (TEFC)

SIZE (HP)	SPEED (RPM)		
	1200	1800	3600
	NEMA NOMINAL EFFICIENCY (%)		
1	82.5	85.5	78.5
1.5	87.5	86.5	85.5
2	88.5	86.5	86.5
3	89.5	89.5	88.5
5	89.5	89.5	89.5
7.5	91.7	91.7	91.0
10	91.7	91.7	91.7
15	92.4	92.4	91.7
20	92.4	93.0	92.4
25	93.0	93.6	93.0
30	93.6	93.6	93.0
40	94.1	94.1	93.6
50	94.1	94.5	94.1
60	94.5	95.0	94.1
75	95.0	95.4	94.5

SECTION 231040 - DEMOLITION

Part 1 - GENERAL

Description of Work: Demolition requires salvage removal of equipment and disposal offsite of piping, ductwork, and other mechanical components and equipment, as indicated.

Submittals: Provide a detailed description and sequence of demolition and removal work to ensure uninterrupted progress of the Owner's on-site operations. Comply with salvage requirements in applicable specifications sections.

Regulatory Compliance: Comply with all applicable codes and regulations.

Part 2 - PRODUCTS

Not used.

Part 3 - EXECUTION

General: Remove all exposed piping (water, waste, vent, drain, hydronic, and gas) and ductwork made obsolete by new work, and cap off behind floor, walls, and ceiling. Further demolition work may be indicated on the Drawings and on the Demolition Schedule.

Traffic: Conduct demolition operations and removal of debris to ensure minimum interference with roads, streets, walks, and other adjacent occupied or used facilities.

Protections: Ensure safe passage of persons around area of demolition. Conduct operations to prevent damage or injury to the building, equipment, other facilities, and persons.

Damages: Promptly repair damages caused to facilities by demolition operations at no cost to Owner.

Utility Services: Maintain existing utilities, keep in service, and protect against damage during demolition operations.

Pollution Controls: Use suitable methods to limit dust and dirt rising and scattering in air to lowest practical level.

END OF SECTION 231040

MECHANICAL DEMOLITION SCHEDULE
Greenfield School Administration Office Project - Greenfield, MA

HEATING:

REMOVE ALL EXISTING RADIATORS, HYDRONIC PIPING, VALVES, CONTROLS, AND OTHER HEATING EQUIPMENT SERVED BY THE PIPING SYSTEM THAT IS MADE OBSOLETE BY THE NEW SYSTEM.

REMOVE OTHER HEATING EQUIPMENT MADE OBSOLETE BY NEW WORK.

VENTILATION:

REMOVE EXISTING VAV BOXES, DUCTWORK, REGISTERS, GRILLES, AND ACCESSORIES AS RENDERED OBSOLETE BY NEW HVAC SYSTEMS.

CONTROLS:

REMOVE WIRING AND CONTROLS COMPONENTS AS RENDERED OBSOLETE BY NEW WORK.

ASBESTOS:

IF IT IS NECESSARY TO REMOVE OR CONNECT TO EXISTING PIPING SUSPECTED OF BEING COVERED WITH ASBESTOS CONTAINING INSULATION, NOTIFY ARCHITECT, OWNER, AND PRIME CONTRACTOR. ASBESTOS TESTING AND ABATEMENT WILL BE BY OTHERS.

HAZARDOUS MATERIALS:

DISPOSE OF (AND RECYCLE WHEREVER POSSIBLE) ALL HAZARDOUS MATERIALS PROPERLY IN ACCORDANCE WITH LOCAL REGULATIONS. THESE MATERIALS INCLUDE BUT ARE NOT LIMITED TO MERCURY IN THERMOMETERS, CONTROLS, AND THERMOSTATS; BATTERIES; AND ELECTRONICS.

SECTION 231055 - BASIC MATERIALS AND METHODS

Part 1 - GENERAL

Submittals: Submit product data for each specialty and for access doors.

Part 2 - PRODUCTS

Zinc Content: Brass alloys of valves and all other hydronic/plumbing products shall contain no more than 15% zinc. Compliance with this requirement shall be shown on all relevant product submittals.

No Antibacterial: *No part of any product provided under this Division shall be anti-bacterial or anti-microbial using a chemical or physical biocide. Nanoparticle silver is prohibited.*

Mercury: Products and materials containing mercury are not allowed on this project. Prohibited products include, but are not limited to mercury thermostats (whether wall mounted or unit mounted), mercury float switches, mercury thermometers, mercury boiler pressure or temperature controls, and mercury switches.

Propylene Glycol: Unless otherwise noted, charge systems with non-toxic (Gosselin Rating = 1), inhibited propylene glycol solution sufficient to achieve a freeze point of 1ºF. Systems should be charged with glycol as soon as possible. Prolonged operation with plain water may result in leaking seals when the system is charged with glycol and there is a greater risk of damage due to frozen pipes if the system is operated without glycol during cold weather.

Gaskets and Seals: Provide thickness, material, and type suitable for fluid to be handled, and design temperatures and pressures. Pipe lubricants and sealants such as fluorocarbon resin tape and pipe dopes (Teflon^{R}) are not recommended due to evidence that they are subject to leakage when used with propolyene glycol solutions. Do not use Viton A, Neoprene, or Nitrite Buna N gaskets or other materials that are not compatible with propylene glycol at elevated temperatures.

Unions: Malleable-iron, Class 150 for low pressure service and class 250 for high pressure service; hexagonal stock, with ball-and-socket joints, metal-to-metal bronze seating surfaces; female threaded ends.

Dielectric Unions: Provide dielectric unions with appropriate end connections for the pipe materials in which installed (screwed, soldered, or flanged), which effectively isolate dissimilar metals, to prevent galvanic action, and stop corrosion.

Escutcheons: Chrome-plated, stamped steel, hinged, split-ring escutcheon, with set screw. Inside diameter shall closely fit pipe outside diameter. Outside diameter shall completely cover the opening in floors, walls, or ceilings.

Sleeves: Steel Sleeves: Schedule 40 steel pipe, ASTM A120.

Sleeve Seals: Modular type, consisting of interlocking synthetic rubber links shaped to continuously fill annular space between pipe and sleeve, connected with bolts and pressure plates which cause rubber sealing elements to expand when tightened, providing watertight seal and electrical insulation.

Drip Pans: Provide drip pans fabricated from corrosion- resistant sheet metal with watertight joints, and with edges turned up 2-1/2". Reinforce top, either by structural angles or by rolling top over 1/4" steel rod. Provide hole, gasket, and flange at low point for watertight joint and 1" drain line connection.

Steel Access Doors: Factory-fabricated and assembled units, complete with attachment devices and fasteners ready for installation. Joints and seams shall be continuously welded steel, with welds ground smooth and flush with adjacent surfaces.

Frames: 16-gauge steel, with a 1-inch-wide exposed perimeter flange for units installed in unit masonry, pre-cast, or cast-in-place concrete, ceramic tile, or wood paneling, or with a perforated flanges with wallboard bead for units installed in gypsum wall board.

Flush Panel Doors: 14-gauge sheet steel, with concealed spring hinges or concealed continuous piano hinge set to open 175 degrees; factory-applied prime paint.

Wet Areas: Provide stainless steel access doors and frames if located in toilet rooms or wet areas.

Part 3 - EXECUTION

Unions: Install unions at the final connection to each piece of equipment and plumbing fixture having 2" and smaller connections, and elsewhere as indicated.

Dialectric Unions: Install dielectric unions to connect piping materials of dissimilar metals.

Pipe Sleeves: Install pipe sleeves where piping passes through masonry walls, floors, roofs, and fire-rated assemblies. Do not install sleeves through structural members of work, except as detailed on drawings, or as reviewed by Architect/Engineer. Install sleeves accurately centered on pipe runs. Size sleeves so that piping and insulation (if any) will have free movement in sleeve, including allowance for thermal expansion; but not less than 2 pipe sizes larger than piping run. Where insulation includes vapor-barrier jacket, provide sleeve with sufficient clearance for installation. Install length of sleeve equal to thickness of construction penetrated, and finish flush to surface; except floor sleeves. Extend floor sleeves 1/4" above level floor finish, and 3/4" above floor finish sloped to drain. Provide temporary support of sleeves during placement of concrete and other work around sleeves, and provide temporary closure to prevent concrete and other materials from entering sleeves. Sleeves are not required for core drilled holes.

Acoustic Sealing of Pipes and Duct Penetration: For all pipe and duct penetrations that are not fire-sealed, pack space around duct or pipe with fiberglass material and caulk with non hardening resilient caulk.

Escutcheons: Install escutcheons on pipes exposed to view that pass through walls, floor or ceilings unless Architect waives this requirement and accepts a neat firestopping job as acceptable. Fasten escutcheons securely to pipe and tight to surface. Note that for insulated piping, the insulation should pass through the wall opening and the opening should be firestopped. If the escutcheon/insulation cannot completely cover the opening, then patch the opening to match existing surface.

Field Quality Control:

Follow safety procedures recommended in the Material Safety Data Sheets.
Finish surfaces of firestopping which are to remain exposed in the completed work to a uniform and level condition.

All areas of work must be accessible until inspection by the applicable Code Authorities.
Correct unacceptable firestops and provide additional inspection to verify compliance with this specification.

Cleaning:

Remove spilled and excess materials adjacent to firestopping without damaging adjacent surfaces.

Leave finished work in neat, clean condition with no evidence of spill overs or damage to adjacent surfaces.

Drip Pans: Locate drip pans under piping passing over or within 3' horizontally of electrical equipment, and elsewhere as indicated. Hang from structure with rods and building attachments; weld rods to sides of drip pan. Brace to prevent sagging or swaying. Connect 1" drain line to drain connection, and run to nearest plumbing drain or elsewhere as indicated.

Access Doors: Install access doors for all equipment or devices that require access for servicing, maintenance or replacement. Equipment requiring access doors includes, but is not limited to the following; valves, in-line expansion compensators, water hammer arresters, trap primers, balance valves, air vents, heating and cooling coils, fire dampers, dampers, kitchen exhaust ductwork (for cleaning), control valves and dampers.

Coordinate location of access doors with Architect before installing equipment requiring access where access doors may have aesthetic implications.

Set frames accurately in position and securely attached to supports, with face panels plumb and level in relation to adjacent finish surfaces.

Adjust hardware and panels after installation for proper operation.

Smoke Detectors: Install smoke detectors furnished by fire alarm supplier.

Painting - General: Paint all exposed steel or cast iron or wrought iron piping and fittings that are not insulated, including hydronic piping (Black), oil piping (Black), and gas piping (Yellow). Paint all steel brackets and support structures in the mechanical room that are not galvanized (Black). Paint all expansion tanks, air separators, and other equipment that is not insulated and that does not come with a finish coat of gloss enamel paint (Blue, to match boilers). Remove all packing labels before painting. Touch up any damaged paint on pumps, boilers and other equipment. There should be absolutely no visible rust anywhere in the mechanical room or elsewhere in the building and any mechanical system components.

Painting - Preparation: Clean all equipment before painting and remove all shipping labels. Do not remove warning labels of manufacturer name tags. Use high quality oil based industrial enamel paint.

END OF SECTION 231055

SECTION 231084 - FIRESTOPPING FOR MECHANICAL SYSTEMS

Part 1 - GENERAL

Related Documents: Drawings and general provisions of Contract, including General and Supplementary Conditions and Division-1 Specification Section, apply to work specified in this section.

Definitions: Firestopping: Material or combination of materials used to retain integrity of fire-rated construction by maintaining an effective barrier against the spread of flame, smoke, and hot gases through penetrations in fire rated wall and floor assemblies.

General Description Of The Work Of This Section: Only tested firestop systems shall be used in specific locations as follows:

Penetrations for the passage of duct, piping, and other mechanical equipment through fire-rated vertical barriers (walls and partitions), horizontal barriers (floor/ceiling assemblies), and vertical service shaft walls and partitions.

Related Work Of Other Sections: Coordinate work of this section with work of other sections as required to properly execute the work and as necessary to maintain satisfactory progress of the work of other sections, including:

Quality Assurance: A manufacturer's direct representative (not distributor or agent) to be on-site during initial installation of firestop systems to train appropriate contractor personnel in proper selection and installation procedures. This will be done per manufacturer's written recommendations published in their literature and drawing details.

Firestop System installation must meet requirements of ASTM E 814 or UL 1479 tested assemblies that provide a fire rating equal to that of construction being penetrated.

Proposed firestop materials and methods shall conform to applicable governing codes having local jurisdiction.

Firestop Systems do not reestablish the structural integrity of load bearing partitions/assemblies, or support live loads and traffic. Installer shall consult the structural engineer prior to penetrating any load bearing assembly.

For those firestop applications that exist for which no UL tested system is available through a manufacturer, a manufacturer's engineering judgment derived from similar UL system designs or other tests will be submitted to local authorities having jurisdiction for their review and approval prior to installation. Engineering judgment drawings must follow requirements set forth by the International Firestop Council.

Submittals: Submit Product Data: Manufacturer’s specifications and technical data for each material including the composition and limitations, documentation of UL firestop systems to be used and manufacturer's installation instructions to comply with Section 1300.

Manufacturer's engineering judgment identification number and drawing details when no UL system is available for an application. Engineering judgment must include both project name and contractor's name who will install firestop system as described in drawing.

Submit material safety data sheets provided with product delivered to job-site.

Installer Qualifications: Engage an experienced Installer who is certified, licensed, or otherwise qualified by the firestopping manufacturer as having been provided the necessary training to install manufacturer's products per specified requirements. A manufacturer's willingness to sell its firestopping products to the Contractor or to an Installer engaged by the Contractor does not in itself confer qualification on the buyer.

The work is to be installed by a contractor with at least one of the following qualifications:

FM 4991 Approved Contractor
UL Approved Contractor
Firestop Manufacturer's Accredited Fire Stop Specialty Contractor

Delivery, Storage, And Handling:

Deliver materials undamaged in manufacturer's clearly labeled, unopened containers, identified with brand, type, and UL label where applicable.

Coordinate delivery of materials with scheduled installation date to allow minimum storage time at job-site.

Store materials under cover and protect from weather and damage in compliance with manufacturer's requirements.

Comply with recommended procedures, precautions or remedies described in material safety data sheets as applicable.

Do not use damaged or expired materials.

Project Conditions: Do not use materials that contain flammable solvents.

Scheduling: Schedule installation of cast in place firestop devices after completion of floor formwork, metal form deck, or composite deck but before placement of concrete.

Schedule installation of other firestopping materials after completion of penetrating item installation but prior to covering or concealing of openings.

Verify existing conditions and substrates before starting work. Correct unsatisfactory conditions before proceeding.

Weather conditions: Do not proceed with installation of firestop materials when temperatures exceed the manufacturer's recommended limitations for installation printed on product label and product data sheet.

During installation, provide masking and drop cloths to prevent firestopping materials from contaminating any adjacent surfaces.

Part 2 - PRODUCTS

Firestopping, General: Provide firestopping composed of components that are compatible with each other, the substrates forming openings, and the items, if any, penetrating the firestopping under conditions of service and application, as demonstrated by the firestopping manufacturer based on testing and field experience.

Provide components for each firestopping system that are needed to install fill material. Use only components specified by the firestopping manufacturer and approved by the qualified testing agency for the designated fire-resistance-rated systems.

Use only firestop products that have been UL 1479 or ASTM E 814 tested for specific fire-rated construction conditions conforming to construction assembly type, penetrating item type, annular space requirements, and fire-rating involved for each separate instance.

Acceptable Manufacturers: Subject to compliance with through penetration firestop systems (XHEZ) listed in Volume II of the UL Fire Resistance Directory, provide products of the following manufacturers as identified below:

Hilti, Inc.
3M Electrical Products Div./3M.
Specified Technologies, Inc.

PART 3 - EXECUTION

Preparation

Verification of Conditions: Examine areas and conditions under which work is to be performed and identify conditions detrimental to proper or timely completion.

Verify penetrations are properly sized and in suitable condition for application of materials.

Surfaces to which firestop materials will be applied shall be free of dirt, grease, oil, rust, laitance, release agents, water repellents, and any other substances that may affect proper adhesion.

Provide masking and temporary covering to prevent soiling of adjacent surfaces by firestopping materials.

Comply with manufacturer's recommendations for temperature and humidity conditions before, during and after installation of firestopping.

Do not proceed until unsatisfactory conditions have been corrected.

Coordination: Coordinate location and proper selection of cast-in-place Firestop Devices with trade responsible for the work. Ensure device is installed before placement of concrete. Responsible trade to provide adequate spacing of field run pipes to allow for installation of cast-in-place firestop devices without interferences.

Installation

Regulatory Requirements: Install firestop materials in accordance with UL Fire Resistance Directory.

Manufacturer's Instructions: Comply with manufacturer's instructions for installation of through-penetration joint materials.

Seal all holes or voids made by penetrations to ensure an air and water resistant seal.

Consult with mechanical engineer, project manager, and damper manufacturer prior to installation of UL firestop systems that might hamper the performance of fire dampers as it pertains to duct work.

Protect materials from damage on surfaces subjected to traffic.

Field Quality Control

Examine sealed penetration areas to ensure proper installation before concealing or enclosing areas.

Keep areas of work accessible until inspection by applicable code authorities.

Inspection of through-penetration firestopping shall be performed in accordance with ASTM E 2174, “Standard Practice for On-Site Inspection of Installed Fire Stops” or other recognized standard.

Perform under this section patching and repairing of firestopping caused by cutting or penetrating of existing firestop systems already installed by other trades.

Adjusting And Cleaning

Remove equipment, materials and debris, leaving area in undamaged, clean condition.

Clean all surfaces adjacent to sealed holes and joints to be free of excess firestop materials and soiling as work progresses.

Identification

Identify through-penetration firestop systems with pressure-sensitive, self-adhesive, preprinted vinyl labels. Attach labels permanently to surfaces of penetrated construction on both sides of each firestop system installation where labels will be visible to anyone seeking to remove penetrating items or firestop systems. Coordinate with Architect before installing if labels will be exposed to view in finished spaces. Include the following information on labels:

The words: "Warning-Through-Penetration Firestop System-Do Not Disturb. Notify Building Management of Any Damage."

Contractor's name, address, and phone number.

Through-penetration firestop system designation of applicable testing and inspecting agency.

Date of installation.

Through-penetration firestop system manufacturer's name.

Installer's name.

END OF SECTION 231084

FIRESTOPPING DETAIL SCHEDULE
Greenfield School Administration Office Project - Greenfield, MA

MANUFACTURER: SPECIFIED TECHNOLOGIES, INC.

CONSTRUCTION TYPE	CONCRETE/MASONRY			FRAME	
ASSEMBLY TYPE	FLOOR	WALL	WALL	FLOOR	WALL
RATING	1 OR 2	1 OR 2	3 HR	1 OR 2	1 OR 2
STEEL (≤6") CAST IRON (≤12") OR COPPER (≤4") PIPE WITH 2" MAX INSULATION	CAJ-5087 LCI Intumescent	CAJ-5087 LCI Intumescent	CAJ-5165 LCI Intumescent	FC-5043 LCI Intumescent	WL-5014 LCI Intumescent
STEEL (≤8") CAST IRON (≤12") OR COPPER (≤6") UNINSULATED	CAJ-1240 LCI Intumescent	CAJ-1240 LCI Intumescent	CAJ-1240 LCI Intumescent	FC-1074 LCI Intumescent	WL-1049 LCI Intumescent
ABS/PVC PIPE ≤4" WITHOUT INSULATION	CAJ-2574 SSBLU Wrap Strip	CAJ-2574, SSWBLU Wrap Strip	CAJ-2594 SSWBLU Wrap Strip	FC-2034 LCC Collar	WL-2059 LCC Collar
ROUND DUCTS (Non-Damp)	≤24" ROUND CAJ-7023 LCI	≤24" ROUND CAJ-7023 LCI	24" ROUND CAJ-7023 LCI	≤10" ROUND FC-7014 LCI	≤20" ROUND WL-7026 LCI
RECTANGULAR DUCTS (Non-Damp)	60" x 36" CAJ 7027 LCI	60" x 36" CAJ 7027 LCI	60" x 36" CAJ 7027 LCI	8"x 8" FC-7023 LCI	≤100"x100" WL-7025 LCI
RECTANGULAR INSULATED DUCTS (Non-Damp)	60"x 36" CAJ-7143 LCI	60"x 36" CAJ-7143 LCI	STI EJ	STI EJ	100" x 100" WL-7149 LCI
RECTANGULAR GREASE DUCTS (Non-Damp)	24"x 12" CAJ-7048 LCI	24"x 12" CAJ-7048 LCI	STI EJ	STI EJ	24"x 12" WL-7099 LCI

Notes: Refer to architectural plans for all assembly ratings. Submit drawing for each application including applications encountered on job but not indicated above. Submit product information on all fire-stop products. Contractor shall label penetrations in concealed locations with detail if using permanent marker.

"EJ" is a system designed and drafted by specified technologies, inc. If the field application does not meet a UL system.

Specified Technologies, Inc.
210 Evans Way
Somerville, NJ 08876
800.992.1180
www.stifirestop.com

SECTION 231100 - VALVES

Part 1 - GENERAL

Submittals: Submit product data, for all valves. Include country of origin, body material, valve design, pressure and temperature classifications, end connection details, seating materials, trim material and arrangement, dimensions and required clearances, and installation instructions.

Pressure and Temperature Ratings: as required to suit system pressures and temperatures.

Sizes: Unless otherwise indicated, provide valves of same size as upstream pipe size.

Glycol Compatibility: Provide valves that are compatible with 35% propylene glycol solutions at temperatures up to 230°F.

End Connections: as specified in the individual valves specifications.

Threads: Comply with ANSI B2.1. ANSI/ASME B1.20.1.

Flanges: Comply with ANSI B16.1 for cast iron, ANSI B16.5 for steel, and ANSI B16.24 for bronze valves.

Solder-Joint: Comply with ANSI B16.18. Do not use solder joints for HVAC applications.

Country of Origin: Valves shall be manufactured in the United States, Canada, or Italy.

Part 2 – PRODUCTS

Zinc Content: Brass alloys of valves and all other hydronic/plumbing products shall contain no more than 15% zinc. Compliance with this requirement shall be shown on all relevant product submittals.

Gate Valves - 2 Inch and Smaller: MSS SP-80; Class 125, body and bonnet of ASTM V62 cast bronze, threaded or solder ends, solid disc, copper-silicon alloy stem, brass packing gland, "Teflon" impregnated packing, and malleable iron handwheel. Class 150 valve meeting the above shall be used where pressure requires.

Gate Valves - 2-1/2 Inch and Larger: MSS SP-70; Class 125 iron body, bronze mounted, with body and bonnet conforming to ASTM A 126 Class B, flanged ends, and "Teflon" impregnated packing and two-piece packing gland assembly.

Ball Valves – HVAC Only (allowed ONLY if there is no plumbing work on the project): rated for 150 PSI saturated steam pressure, 600 PSI WOG pressure up to 3/4”, 500 PSI WOG 1” to 2”, and 400 PSI WOG 2-1/2” and larger; 2-piece construction; bronze/brass body conforming to ASTM B-62 or ASTM B-584; standard/full port; chrome-plated brass ball; replaceable "Teflon" or "TFE" seats and seals; blowout proof stem; and steel handle. For LP or natural gas shut-off service: valve shall be AGA and/or UL listed; where required by state or local code, furnish with T-handle.

Ball Valves – HVAC and Plumbing: See “Water Distribution System” section.

Plug Valves - 2 Inch and Smaller: 150 PSI WOG, bronze body, straightaway patter, square head, threaded ends.

Plug Valves - 2-1/2 Inch and Larger: MSS SP-78; 175 PSI lubricated plug type, semi-steel body, single gland wrench operated, flanged ends.

Globe Valves - 2 Inch and Smaller: MSS SP-80; Class 125, body and screwed bonnet of ASTM B 62 cast bronze, threaded or solder ends, brass or replaceable composition disc, copper silicon alloy stem, brass packing gland, "Teflon" impregnated packing, and malleable iron handwheel. Class 150 valves meeting the above shall be used where pressure requires.

Butterfly Valves - 2-1/2 Inch and Larger: MSS SP-67; rated at 200 PSI; cast-iron body conforming to ASTM a 126, Class B. Provide valves with field replaceable EPDM sleeve, aluminum bronze disc, stainless steel stem, and EPDM O-ring stem seals. Provide lever operators with locks for sizes 2 through 6 inches and gear operators with position indicator for sizes 8 through 24 inches. Provide lug or wafer type as indicated. Provide lug valves on dead-end service or requiring additional body strength.

Swing Check Valves - 2 Inch and Smaller: MSS SP-80; Class 125, cast bronze body and cap conforming to ASTM B 62, horizontal swing, with a bronze disc, and having threaded or solder ends.

Wafer Check Valves - (Non-Slam): Class 250, cast iron body, replaceable lapped bronze seat, lapped and balanced twin bronze flappers and stainless steel trim. Valve shall be designed to open and close at approximately one foot differential pressure. Twin flappers shall be loaded with a stainless steel torsion spring to minimize flapper drag and assure even non-slam checking action.

Selection of Valve Ends (Pipe Connections): Except as otherwise indicated, select valves with the following ends or types of pipe/tube connections:

Copper Tube Size 3 Inch and Smaller: Solder ends, except in heating hot water and low pressure steam service which shall have threaded ends.

Steel Pipe Sizes 2 Inch and Smaller: Threaded or grooved-end.

Steel Pipe Sizes 2-1/2 Inch and Larger: Grooved-end or flanged.

Manufacturer: Hammond, Jomar, Milwaukee, Nibco, Watts.

Part 3 - EXECUTION

General: Refer to other Division 23 Section and to plans for locations of valves. Install valves and unions for each fixture and item of equipment in a manner to allow equipment removal without system shut-down. Unions are not required on flanged devices. Install 3-valve bypass around each pressure reducing valve using throttling type valves. Install valves where required for proper operation of piping and equipment, including valves in branch lines where necessary to isolate sections of piping.

Application: Use gate, ball, and butterfly valves for shut-off duty; globe, ball, and butterfly for throttling duty.

Application for Vermont State Projects: Provide ball valves up to 2-1/2” and butterfly 3” and up. Do not use gate valves. Globe valves are not needed except for control valves, which are specified elsewhere.

Access: Locate valves for easy access and provide separate support where necessary.

Stems: Install valves with stems pointed up, in vertical position where possible, but in no case with stems pointed downward from horizontal plane unless unavoidable. Install valve drains with hose-end adapter with screw cap and chain for each valve that must be installed with stem below horizontal plane. Install extended-stem valves, where insulation is indicated, arranged in proper manner to receive insulation.

END OF SECTION 231100 (4/25/16)

SECTION 231125 - EXPANSION COMPENSATION

Part 1 - GENERAL

Submittals: Submit manufacturer's product data for each expansion compensation device.

Part 2 - PRODUCTS

General: Provide packless expansion joints where indicated for piping systems, with materials, and pressure/temperature ratings selected by Installer to suit intended service. Select packless expansion joints to provide 200% absorption capacity of piping expansion between anchors.

Manufacturer: Keflex or Metraflex

Expansion Compensators: Pressure rated for 200 psi, 2-ply stainless steel bellows, brass shrouds and end fittings for copper piping systems, or 2-ply stainless steel bellows, carbon steel shrouds and end fittings for steel piping systems. Provide guides and anchors in accordance with manufacturer's recommendations.

Part 3 - EXECUTION

Expansion Compensators: Install expansion joints and compensators where indicated, and elsewhere as determined by Installer for adequate expansion of installed piping system. Install in accordance with manufacturer's instructions. Provide pipe anchors and pipe alignment guides as required and in accordance with manufacturer's recommendations. Align units properly to avoid end loading and torsional stress.

Expansion Loops: Fabricate expansion loops as indicated, in locations indicated, and elsewhere as determined by Installer for adequate expansion of installed piping system. Subject loop to cold spring which will absorb 50% of total expansion between hot and cold conditions. Provide pipe anchors and pipe alignment guides as indicated, and elsewhere as determined by Installer to properly anchor piping in relationship to expansion loops.

Expansion Compensation for Risers and Terminals: Install connection between piping mains and risers with at least 5 pipe fittings including tee in main. Install connections between piping risers and terminal units with at least 4 pipe fittings including tee in riser.

END OF SECTION 231125

SECTION 231140 - SUPPORTS AND ANCHORS

Part 1 - GENERAL

MSS: Materials, design, manufacture, fabrication, selection, application, and installation shall comply with MSS SP-58, SP-69, and SP-89.

Submittals: Submit product data for hangers, clamps, saddles and shields, pipe guides and anchors, threaded rod, and hex nuts.

Part 2 - PRODUCTS

General: Except as otherwise indicated, for each piping system provide factory-fabricated piping hangers and supports, selected by Installer to suit piping systems, in accordance with manufacturer's published product information. Use only one type by one manufacturer for each piping service. Select size of hangers and supports to exactly fit pipe size for bare piping, and to exactly fit around piping insulation with saddle or shield for insulated piping.

Copper Pipe: Provide copper-plated hangers and supports for copper-piping systems.

Manufacturer: B-Line Systems; Newman Associates (PHD); or Grinnell.

Adjustable Swivel Rings: Not allowed. Use clevis hangers or three-bolt clamps.

Anchor Bolts and Structural Supports: Provide anchoring and structural supports to meet seismic structural requirements as outlined in the International Building Code or applicable state code. Provide manufacturer’s recommended fastening of equipment rigidly mounted to slabs or equipment pads. Provide seismic snubbers on all equipment mounted on vibration isolation springs and devices. Size anchor bolts and snubbers to withstand lateral forces. Refer to Division 15 section “Seismic Restraints.”

Malleable Iron Beam Clamps: Electro-galvanized malleable iron, center load.

C-Clamps: Not allowed. Use malleable iron beam clamps.

Steel Beam Clamps: Not allowed. Use malleable iron beam clamps.

Clevis Hangers: For uninsulated copper piping, provide standard weight, low carbon steel with copper finish. For all other piping, provide standard weight, electro-galvanized low carbon steel.

Heavy-Duty Steel Trapezes: Fabricate from steel shapes selected for loads required; weld steel in accordance with AWS standards.

Hex Nuts: Electro-galvanized steel, “heavy.”

Pipe Guides: Provide factory-fabricated guides, of cast semi-steel or heavy fabricated steel, consisting of bolted two-section outer cylinder and base with two-section guiding spider bolted tight to pipe. Size guide and spiders to clear pipe and insulation (if any), and cylinder. Provide guides of length recommended by manufacturer to allow indicated travel.

Riser Clamps: Electro-galvanized steel or copper finish for copper piping.

Saddles and Shields: Except as otherwise indicated, provide saddles and shields under piping hangers and supports, factory-fabricated, for all insulated piping. Size saddles and shields for exact fit to mate with pipe insulation.

Saddles: Plain finish steel.

Shields: Pre-galvanized steel.

Threaded Rod: Electro-galvanized steel.

Three-Bolt Clamps: Standard weight, electro-galvanized steel.

Pipe Supports for Roof Mounted Piping: Pipe support base shall combine UV protected 33% fiberglass reinforced 6/6 Nylon with an adjustable stainless steel threaded rod and axel assembly and which securely attaches to the base. Base for Pipe Support shall have flat sold lower surface with neoprene roof pad adhered to bottom surface. Pad shall provide for cushion between support and roof surface. Support shall be adjustable up to 10" above roof surface. Assembly shall include a hard cast rubber roller assembly capable of providing impact resistance to prevent damage to roof or support during pipe installation. Supports shall conform to MSS SP-58-2002, MSS SP-69-2002 and where appropriate MSS SP127-2001.

Products shall be: MAPA Products, MS-4 for piping 3" diameter and smaller. (Max load 140 lbs.) Or MAPA Products, MS-5 for piping 5" diameter and smaller (Max. load 165 lbs.) Or equal. New England sales representative: K Ross Co., Kingston, MA, phone 508-747-4493, fax 508-746-6678, email krosscompany@aol.com. Provide a submittal on this product. (7/1/05)

Part 3 - EXECUTION

Building Attachments: Install at required locations within concrete or on structural steel for proper piping support. Install additional building attachments where support is required for additional concentrated loads, including valves, flanges, guides, strainers, expansion joints, and at changes in direction of piping. Install concrete inserts before concrete is placed; fasten inserts securely to forms. Where concrete with compressive strength less than 2500 PSI is indicated, install reinforcing bars through openings at top of inserts.

Hangers and Supports, General: Install hanger and supports in accordance with the following requirements.

> Install hangers and supports complete with necessary inserts, bolts, rods, nuts, washers and other accessories. Except as otherwise indicated for exposed continuous pipe runs, install hangers and supports of same type and style as installed for adjacent similar piping.
>
> Arrange for grouping of parallel runs of horizontal piping to be supported together on trapeze type hangers where possible. Where piping of various sizes is to be supported together by trapeze hangers, space hangers for smallest pipe size or install intermediate supports for smaller diameter pipe.

Install hangers and supports to allow controlled movement of piping systems and to permit freedom of movement between pipe anchors, and to facilitate action of expansion joints, expansion loops, expansion bends and similar units.

Install hangers and supports so that piping live and dead loading and stresses from movement will not be transmitted to connected equipment.

Install hangers and supports to provide indicated pipe slopes, and so that maximum pipe deflections allowed by ANSI B31 Pressure Piping Codes are not exceeded.

Support fire-water piping independently of other piping.

Do not use wire or perforated metal to support piping, and do not support piping from other piping.

Hanger and Support, Applications: Install the following hangers and supports:

For horizontal pipes with runs of 20 feet or greater, install with articulated joints at top and bottom of threaded rod, to allow for pipe movement along the length of the piping. For insulated piping, this is normally accomplished using clevis hangers and malleable iron beam clamps.

Support vertical piping with riser clamps at each floor.

Hanger Spacing: Comply with the spacing indicated below:

Material	Size (inches)	Maximum Spacing (feet)
Copper	1/2	4
	5/8 to 1-1/4	6
	1-1/2 or greater	10
Steel	1/2	6
	5/8 to 1	8
	1-1/4 or greater	10
Cast Iron	all sizes	8--also install hangers 2 feet from each side of each joint
Sch. 40 PVC	all sizes	5
PP-RCT	1/2” to 1” - SDR 7.3	4
	1-1/4” to 1-1/2” - SDR 11	4.5
	2” to 4” - SDR 17	5
	4” to 6” - SDR 17	6
	4” to 6” - SDR 11	8

Insulated Piping:

Except as otherwise indicated, provide saddles or shields for all insulated piping. For hot piping, use saddles or shields; for cold piping, use shields only. Size saddles and shields for exact fit to mate with pipe insulation.

Pipe Clamps: Attach clamps, including spacers (if any), to piping with clamps projecting through insulation; do not exceed pipe stresses allowed by ANSI B31.

Shields: Where low-compressive-strength insulation such as fiberglass is used, install shields at all hangers.

Hanger Adjustment: Adjust hangers so as to distribute loads equally on attachments.

Support Adjustment: Provide grout under supports so as to bring piping and equipment to proper level and elevations.

Anchors: Install at ends of principal pipe-runs, at intermediate points in pipe-runs between expansion loops and bends at proper locations to prevent stresses from exceeding those permitted by ANSI B31, and to prevent transfer of loading and stresses to connected equipment. Make provisions for preset of anchors as required to accommodate both expansion and contraction of piping.

Housekeeping Pads: Provide concrete housekeeping bases for floor mounted equipment furnished as part of the work of Division 15. Size bases to extend minimum of 4" beyond equipment base in any direction; and 4" above finished floor elevation. Construct of reinforced concrete, roughen floor slab beneath base for bond, and provide steel rod anchors between floor and base. Locate anchor bolts using equipment manufacturer's templates. Chamfer top and edge corners.

Stands: Provide structural steel stands to support equipment not floor mounted or hung from structure. Construct of structural steel members or steel pipe and fittings. Provide factory-fabricated tank saddles or tanks mounted on steel stands.

Protective Padding: Provide protective high density foam padding on all hangers and equipment supports that are hung at “head-height” (5’ to 7’) in occupied spaces or mechanical rooms. Attach foam with adhesive. Do not use duct tape.

Pipe Supports for Roof Mounted Piping: Supports should be spaced so that weights are evenly distributed typically 6’ to 10’ apart unless otherwise stated in this specification. Supports should be positioned so that piping rests evenly on the base without undo strain. Coordinate exact support locations with roofing work. Maintain minimum 6” clearance above roof for all piping. The assemblies shall be leveled using the adjustment feature and the stands spaced so that weights are evenly distributed. Install per manufacturer’s recommended installation procedures. (7/1/05)

END OF SECTION 231140

SECTION 231150 - SEISMIC RESTRAINT

Part 1 - GENERAL

Codes and Standards: This facility shall be provided with seismic restraints in accordance with the applicable edition of the International Building Code, and all applicable codes and standards.

Mechanical Systems Seismic Restraint Shop Drawings: Appropriate information for the seismic restraints required shall be submitted to the Structural Engineer.

Seismic Hazard Level: For seismic hazard level, see the Basis of Design on Structural Drawing S1 or as otherwise indicated by the Structural Engineer. Unless indicated otherwise by Structural Engineer, Category A and B buildings have no seismic restraint requirements for mechanical systems.

Part 2 - PRODUCTS

Materials and Equipment: Manufacturers/Manufacturer's Representatives: Mason Industries, Mechanical Control Systems (978-640-9994); VibraCon (508-393-8221); Novia Associates, Inc. (603-898-8600); B-Line (618-654-2184); or equal.

Part 3 - EXECUTION

Delegated Design: Design and detailing of seismic restraints for mechanical equipment and systems is Delegated Design. Mechanical Contractor shall hire a Licensed Professional Structural Engineer to perform this work.

Inspection: Following completion of the Seismic Restraint portion of the work, the Mechanical Contractor's Licensed Professional Structural Engineer shall inspect the work and provide a signed letter indicating that the Seismic Restraints comply with the Contract Documents and with all applicable codes and standards. Such letter shall be submitted to the Structural Engineer for review.

END OF SECTION 231150

SECTION 231190 - IDENTIFICATION

Part 1 - GENERAL

Submittals: Submit product data for pipe markers and valve tags.

ANSI Compliance: Comply with ANSI A13.1 for lettering size, length of color field, colors, and installed viewing angles of identification devices.

Schedules: Submit valve schedule for each piping system, typewritten and reproduced on 8-1/2" x 11" bond paper. Tabulate valve number, piping system, system abbreviation (as shown on tag), location of valve (room or space), and variations for identification (if any). Mark valves which are intended for emergency shut-off and similar special uses, by special "flags," in margin of schedule.

Part 2 - PRODUCTS

Manufacturers: Allen Systems; W.H. Brady; Brimar; Industrial Safety Supply; or Seton Name Plate.

Plastic Pipe Markers; Snap-On Type: Provide manufacturer's standard pre-printed, semi-rigid, snap-on, color-coded, pipe markers, complying with ANSI A13.1.

Plastic Pipe Markers; Pressure-Sensitive Type: Provide manufacturer's standard pre-printed, permanent adhesive, color-coded, pressure-sensitive vinyl pipe markers, complying with ANSI A13.1.

Underground-Type Plastic Line Marker: Manufacturer's standard permanent, bright-colored, continuous-printed plastic type, intended for direct-burial service; not less than 6" wide x 4 mils thick. Provide tape with printing which most accurately indicates type of service of buried pipe.

Valve Tags: Provide manufacturer's standard solid brass valve tags with piping system abbreviation in approximately 3/16" high letters and sequenced valve numbers approximately 3/8" high, and with 5/32" hole for fastener.

Valve Tag Fasteners: Manufacturer's standard solid brass chain (wire link or beaded type), or solid brass S-hooks of the sizes required for proper attachment of tags to valves, and manufactured specifically for that purpose.

Valve Schedule Frames: For each page of the valve schedule, provide a glazed display frame, with screws for removable mounting on masonry walls. Provide frames of extruded aluminum or plastic with SSB-grade sheet glass or plastic.

Plastic Equipment Markers: Provide manufacturer's standard laminated plastic, color coded equipment markers.

Lettering and Graphics: Coordinate names, abbreviations and other designations used in mechanical identification work, with corresponding designations shown, specified or scheduled. Provide numbers, lettering and wording as indicated or, if not otherwise indicated, as recommended by manufacturers or as required for proper identification and operation/maintenance of mechanical systems and equipment.

Part 3 - EXECUTION

Coordination: Where identification is to be applied to surfaces which require insulation, painting or other covering or finish, including valve tags in finished mechanical spaces, install identification after completion of covering and painting. Install identification prior to installation of acoustical ceilings and similar removable concealment.

Ductwork Identification: Identify air supply, return, exhaust, intake and relief ductwork with stenciled or plastic-laminate signs and arrows, showing ductwork service and direction of flow, in black or white (whichever provides most contrast with ductwork color).

Location: In each space where ductwork is exposed, or concealed only by removable ceiling system, locate signs near points where ductwork originates or continues into concealed enclosures (shaft, underground or similar concealment), and at 50' spacings along exposed runs.

Access Doors: Provide stenciled or plastic-laminate type signs on each access door in ductwork and housings, indicating purpose of access (to what equipment) and other maintenance and operating instructions, and appropriate safety and procedural information.

Concealed Doors: Where access doors are concealed above acoustical ceilings or similar concealment, plasticized tags may be installed for identification in lieu of specified signs, at Installer's option.

Piping Identification: Install pipe markers on each system, and include arrows to show normal direction of flow:

Locate pipe markers and color bands as follows wherever piping is exposed to view in occupied spaces, machine rooms, accessible maintenance spaces (shafts, tunnels, plenums) and exterior non-concealed locations.

Near each valve and control device.

Near each branch, excluding short take-offs for fixtures and terminal units; mark each pipe at branch, where there could be question of flow pattern.

Near locations where pipes pass through walls or floors/ceilings, or enter non-accessible enclosures.

At access doors, manholes and similar access points which permit view of concealed piping.

Near major equipment items and other points of origination and termination.

Spaced intermediately at maximum spacing of 50' along each piping run, except reduce spacing to 25' in congested areas of piping and equipment.

On piping above removable acoustical ceilings, except omit intermediately spaced markers.

Pipes: 3" high yellow tape with 1" high black lettering "NON-POTABLEWATER" and smaller "DO NOT DRINK."

Underground Piping Identification: During back- filling/top-soiling of each exterior underground piping systems, install continuous underground-type plastic line marker, located directly over buried line at 6" to 8" below finished grade. Where multiple small lines are buried in common trench and do not exceed overall width of 16", install single line marker. For tile fields and similar installations, mark only edge pipe lines of field.

Valve Identification: Provide valve tag on every valve, cock and control device in each piping system; exclude check valves, valves within factory-fabricated equipment units, HVAC terminal devices and similar rough-in connections of end-use fixtures and units. List each tagged valve in valve schedule for each piping system. Provide a unique number for each valve.

Valve Schedules: Mount valve schedule frames and schedules in boiler rooms. Where more than one major machine room is shown for project, install mounted valve schedule in each major machine room, and repeat only main valves which are to be operated in conjunction with operations of more than single machine room.

Glycol Notice: Mount attached glycol notice (231190 - S) in frame similar to valve schedule frame and mount in boiler room next to valve schedules.

Mechanical Equipment Identification: Install plastic equipment marker on or near each major item of mechanical equipment and each operation device. Provide signs for the following general categories of equipment and operational devices:

Main control and operating valves, including safety devices and hazardous units such as gas outlets.

Meters, gages, thermometers and similar units.

Fuel-burning units including boilers, furnaces, heaters, and absorption units.

Pumps, compressors, chillers, condensers and similar motor-driven units.

Heat exchangers, coils evaporators, cooling towers, heat recovery units and similar equipment.

Fans, blowers, primary balancing dampers, and mixing boxes.

Packaged HVAC central-station and zone-type units.

Tanks and pressure vessels.

Strainers, filters, humidifiers, water treatment systems, and similar equipment.

Thermometer and Gage Identification: Install self-adhesive plastic strip identification labels on the glass of all dial thermometers and gages. Do not obscure scales.

Ceiling Identification: Provide 1/4-inch self-adhesive dots on ceiling T-bars and access panel frames to indicate location of valves and other service items above ceiling. Provide color-coding as follows unless otherwise designated by Owner: Red-fire dampers and fire sprinkler items (if specified), Green-HVAC, Blue-Plumbing, Yellow-Electrical (if specified).

Volatile Fluid Tank Identification: For any tank which accumulates volatile fluids (such as oil, gasoline, and any other volatile fluids) and is located underfloor or within a building, provide engraved sign, red with white letters, permanently affixed to wall above tank and adjacent to hand pump, if any, stating "CAUTION! CONTENTS OF PUMP DISCHARGE MAY CONTAIN VOLATILE FLUIDS WITH EXPLOSIVE VAPORS. DO NOT SMOKE WHEN SERVICING OR PUMPING OUT TANK. TANK SHOULD BE PUMPED OUT TWICE A YEAR OR MORE OFTEN DEPENDING ON OBSERVED ACCUMULATION."

Final Labeling: Final (owner) room numbers and names (not construction numbers) shall be used for all labeling of all types.

END OF SECTION 231190

SECTION 231250 - INSULATION

Part 1 - GENERAL

Submittals:

Product data for each type of mechanical insulation identifying k-value, thickness, and accessories.

Adhesives and Sealants: Submit product information for adhesives and sealants including MSDS and VOC limits and manufacturing location.

Quality Assurance:

Manufacturer's: Firms regularly engaged in manufacture of mechanical insulation products, of types and sizes required, whose products have been in satisfactory use in similar services for not less than 10 years.

Installer's: Firms with at least 5 years successful installation experience on projects with mechanical insulation systems similar to that required for this project.

Flame/Smoke ratings: Conform to the following characteristics for insulation including facings, cements, and adhesives, when tested according to ASTM E 84, by UL or other testing or inspecting organization acceptable to the authority having jurisdiction. Label insulation with appropriate markings of testing laboratory.

Interior Insulation: Flame spread rating of 25 or less and a smoke developed rating of 50 or less.

Exterior Insulation: Flame spread rating of 75 or less and smoke developed rating of 150 or less.

Part 2 – PRODUCTS

Adhesives and Sealants: Total volatile organic compounds (VOCs) shall not exceed the limits of SCAQMD Rule #1168

Piping Insulation Materials

Fiberglass Preformed Pipe Insulation: ASTM C 547, Class 1, rigid pipe insulation, jacketed.

Material: Inorganic glass fibers, formaldehyde free.

Pipe fittings: Molded fiberglass fabricated specifically for pipe size, type, and adjacent insulation thickness. Only molded products are acceptable. Products manufactured from mitered and glued from sections of straight run insulation or machine routed from flat stock board are unacceptable.

Large Diameter Pipe and Tank Wrap: ASTM C 1393, E84, 2.5 pcf.

Flexible Elastomeric Cellular: Material: Flexible expanded closed-cell EPDM-rubber flexible elastomeric product with smooth skin on both sides, ke 0.245. UV Resistance shall comply with ASTM G 7 and ASTM G 90. Material shall have a recommended service temperatures of at least -100°F to +250°F and be approved by manufacturer for installation above and below ground, indoors and outdoors with no protective finish required. Materials shall NOT contain Microban or any other antimicrobial agent.

Color: Black except provide gray if so indicated on the Insulation Schedule. Provide gray ONLY where insulation will be painted.

Tubular Materials: ASTM C 534, Type I.

Sheet Materials: ASTM C 534, Type II.

Tube Sealing: Tube Sealing: Tubes shall be either un-slit or sealed with the manufacturer's dual tape system; Self-Seal with Protape (SSPT). Use Aeroseal LVOC adhesive or Cel-Link self adhesive discs to seal butt joints then wrap joint circumferentially with Protape.

Two Piece Fittings: Preformed and sized for the specified pipe and insulation thickness.

Coating: Aerocell Aerocoat latex paint provided by insulation manufacturer where indicated by Architect. Color by Architect (white, or may be tinted with standard latex paint pigments such as Benjamin Moore).

Manufacturer: Aeroflex Aerocell.

Pipe Insulation Cover

Foil and Paper Jacket: Laminated glass-fiber-reinforced, flame-retardant kraft paper and aluminum foil, 0.02 perm maximum, when tested according to ASTM E 96.

PVC Jacketing: High-impact, ultra-violet-resistant PVC, 16-mils thick, roll stock ready for shop or field cutting and forming to indicated sizes. Self-lapping seam adhesive.

PVC Fitting Covers: Factory-fabricated fitting covers manufacturered from 16-mil-thick, high-impact, ultra-violet-resistant PVC. Adhesive as recommended by insulation manufacturer.

Aluminum Jacket Pipe Insulation: 0.010" thick, corrugated finish, with a one mil polyethylene film / forty pound kraft paper integral vapor barrier affixed to the interior of the cover in conformance with ASTM B-209.

Ductwork Insulation Materials

Material: Inorganic glass fibers, formaldehyde free.

Rigid Fiberglass Ductwork Insulation: Formaldehyde free*. Conform to ASTM C 612, Class 1. Refer to schedule for density and 'R-value required.* ***Board:*** *ASTM C 612, Class 2, semi-rigid jacketed board.*

Flexible Fiberglass Ductwork Insulation: Formaldehyde free. *Conform to ASTM C 553, Type I, Class B-4. Refer to schedule for density and 'R-value required.* ***Blanket:*** *ASTM C 533, Type II, Class F-1, jacketed flexible blankets.*

Duct Insulation Cover: *Fiberglass reinforced foil and paper (Foil Scrim Kraft) jacket conforming with ASTM C 1136. Install per manufacturer's written instructions.* ***Jacket:*** *All purpose, factory-applied, laminated glass-fiber-reinforced, flame-retardant kraft paper and aluminum foil having self-sealing lap.*

Aluminum Jacket: ASTM B 209, 3003 Alloy, H-14 temper, roll stock ready for shop or field cutting and forming to indicated sizes.

Self Adhering Cover: Membrane shall be a pre-manufactured self adhering product with an UV resistant, stucco embossed facing. Water vapor transmission of the installed product shall be .020 perms or less. Product shall be suitable for continuous use in low temperatures of -10°F.

> **Manufacturers**: Flex-Clad 400, MFM Building Products Corp. or Alumaguard 60, Polyguard Products, Inc.

Non-Self Adhering Cover: Mechanically attached .060 or greater EPDM roofing membrane.

1200 F Mineral Fiber Board and Preformed pipe Insulation

Material: Inorganic mineral fiber board.

Combustibility: Non-combustible

Service Temperature: -120ºF to 1200ºF.

Adhesive: As recommended by manufacturer.

Manufacturer: Partek

Equipment Insulation Materials

Rigid Fiberglass Equipment Insulation: Conform to ASTM C 612, Class 2

Cloth jacketing material: Cover insulation with pre-sized glass, not less than 7.8 ounces per square yard. Provide a trowel or glove grade water based general purpose mastic (white or light gray) suitable for interior or exterior applications. Install per manufacturer's written installation instructions.

Part 3 - EXECUTION

General

Accessories: Select accessories compatible with materials suitable for the service. Select accessories that do not corrode, soften, or otherwise attack the insulation or jacket in either the wet or dry state.

Vapor Barriers: Install vapor barriers on insulated pipes, ducts, and equipment having surface operating temperatures below 60 deg F.

Application: Apply insulation material, accessories, and finishes according to the manufacturer's printed instructions. Install insulation with smooth, straight, and even surfaces. Keep insulation materials dry during application and finishing.

Sealing: Seal joints and seams to maintain vapor barrier on insulation requiring a vapor barrier. Seal penetrations for hangers, supports, anchors and other projections in insulation requiring a vapor barrier. Taper ends and seal with lagging adhesive.

HVAC Piping Insulation Applications

Insulate HVAC piping systems as scheduled. For heating only applications, omit insulation on heating piping within radiation enclosures or unit cabinets; on unions, flanges, strainers, flexible connections, and expansion joints, and on boiler and circulator isolation valves.

Pipe Insulation Installation

General: Tightly butt longitudinal seams and end joints. Bond with adhesive. Stagger joints on double layers of insulation. Apply insulation continuously over fittings, valves, and specialties, except as otherwise indicated. Apply insulation with a minimum number of joints. Apply insulation with integral jackets: Pull jacket tight and smooth. Cover circumferential joints with butt strips, at least 3-inches wide, and of same material as insulation jacket. Secure with adhesive and outward clinching staples along both edges of butt strip and space 4 inches on center.

Longitudinal Seams: Overlap seams at least 1-1/2 inches. Apply insulation with longitudinal seams at bottom of pipe. Clean and dry surface to receive self-sealing lap. Staple laps with outward clinching staples along edge at 4 inches on center.

Vapor Barrier Coatings: Where vapor barriers are indicated, apply on seams and joints, over staples and at end butt to flanges, unions, valves and fittings. At penetrations in jackets for thermometers and pressure gages, fill and seal voids with vapor barrier coating. Repair damage insulation jackets, except metal jackets, by applying jacket material around damaged jacket. Adhere, staple and seal. Extend patch at least 2 inches in both directions beyond damaged insulation jacket and around the entire circumference of the pipe.

Roof Penetrations: Apply insulation for interior applications to a point even with the top of the roof flashing. Seal with vapor barrier coating. Apply insulation for exterior applications butted tightly to interior insulation ends. Extend metal jacket for exterior insulation outside roof flashing at least 2 inches below top of roof flashing. Seal metal jacket to roof flashing with vapor barrier coating.

Exterior Wall Penetrations: For penetrations of below grade exterior walls, terminate insulation flush with mechanical sleeve seal. Seal termination with vapor barrier coating.

Hydronic Pipe exposed to Weather: For hydronic heating or chilled water piping, install aluminum jacket with MEI 44-05 ECO-joint sealant with joints, or EPDM membrane jacket, or weatherproof mastic with glass cloth reinforcing over fiberglass pipe insulation.

Refrigerant Pipe exposed to Weather. Flexible elastomeric cellular with weatherproof jacket as per specifications and/or equal to K-Flex Clad Al and/or equal to Venture Clad 1577CW.

Interior Walls and Partitions Penetrations: Apply insulation continuously through walls and partitions.

Fire-Rated Walls and Partitions Penetrations: Apply insulation continuous through fire-rated walls and partitions. Seal around penetrations in accordance to Firestopping Detail Schedule, 15055-S.

Elastomeric Pipe Insulation: All elastomeric pipe insulation shall be un-slit type where possible. Where slit type insulation is used the pipe insulation must be of a type with a reinforced double seal equal to Armaflex LapSeal™ or K-Flex Insul-Lock DS.

Elastomeric Pipe Elbows: All elbows shall fully mitered or shall use factory fabricated fittings.

Elastomeric Pipe Insulation Exposed to View: All flexible Elasotmeric pipe insulation exposed to view in finished spaces shall be white and shall be painted by the insulation subcontractor with the manufacturer's protective coating.

Flanges, Fittings, and Valves - Interior Exposed and Concealed: Coat pipe insulation ends with vapor barrier coating. Apply premolded, precut, or field-fabricated segments of insulation around flanges, unions, valves, and fittings. Make joints tight. Bond with adhesive.

Use same material and thickness as adjacent pipe insulation.

Overlap nesting insulation by 2 inches or 1-pipe diameter, which ever is greater.

Apply material with adhesive, fill voids with mineral fiber insulating cement. Secure with wire or tape.

Insulate elbows and tees smaller than 3-inches pipe size with premolded insulation.

Insulate elbows and tees 3 inches and larger with premolded insulation or insulation material segments. Use at least 3 segments for each elbow.

Cover insulation, except for metal jacketed insulation, with PVC fitting covers and seal circumferential joints with butt strips.

Hangers and Anchors: Apply insulation continuously through hangers and around anchor attachments. Install saddles, shields, and inserts as specified in Division 23 Section "Supports and Anchors". For cold surface piping, extend insulation on anchor legs a minimum of 12 inches and taper and seal insulation ends. Cover hanger inserts and shields with jacket material matching adjacent pipe insulation.

Piping insulated with elastomeric insulation shall use factory insulated pipe supports to prevent the compression of insulation at hangers and pipe shields.

Equipment Insulation Applications

Insulate all equipment not factory insulated. For heating only applications, omit insulation on hydronic expansion tanks and air separators. Large Diameter Pipe and Tank Wrap may be used in lieu of Board and Block Insulation for water storage tanks and garn storage boilers. Use AP facing and paint with two coats of white latex paint.

Equipment Insulation Installation

General: Install board and block materials with minimum dimension of 12 inches and a maximum dimension of 48 inches.

Groove and score insulation materials as required to fit as closely as possible to the equipment and to fit contours of equipment. Stagger end joints.

Insulation Thickness Greater than 2 Inches: Install insulation in multiple layers with staggered joints.

Bevel insulation edges for cylindrical surfaces for tight joint.

Secure sections of insulation in place with anchor pins and speed washers. Space anchors at maximum intervals of 18 inches in both directions and not more than 3 inches from edges and joints.

Protect exposed corners with corner angles under wires and bands.

Apply 2 coats of vapor barrier compound to minimum thickness of 1/16 inch. Install a layer of glass cloth embedded between layers with 2”overlap at joints.

Block and Board Insulation: Install block and board insulation as follows

Adhesive and Band Attachment: Secure block and board insulation tight and smooth with at least 50 percent coverage of adhesive. Install bands spaced 12 inches apart. Protect insulation under bands and at exterior corners with metal corner angles. Fill joints, seams and chipped edges with vapor barrier compound.

Speed Washers Attachment: Secure insulation tight and smooth with speed washers and welded pins. Space anchor pins 18 inches apart each way and 3 inches from insulation joints. Apply vapor barrier coating compound to insulation in contact, open joints, breaks, punctures, and voids in insulation.

Glass Cloth Jackets: Install glass cloth jacket directly over insulation. On insulation with factory applied jacket, install the glass cloth jacket over the factory applied jacket. Install jacket drawn smooth and tight with a 2-inch overlap at joints. Embed glass cloth between (2) 1/16-inch-thick coats of lagging adhesive. Completely encapsulate the insulation with the jacket, leaving no exposed raw insulation.

Manholes, Handholes, and Information Plates: Bevel and seal insulation ends around manholes, handholes, ASME stamps, and nameplates.

Removable Insulation: Install insulation on components that require periodic inspecting, cleaning, and repairing for easy removal and replacement without damage to adjacent insulation.

Duct Insulation Applications

Insulate ductwork as scheduled.

Duct Insulation

Blanket Insulation: Install tight and smooth. Secure to ducts having long sides or diameters as follows:

Smaller Than 24 Inches: Bonding adhesive applied in 6-inch-wide transverse strips on 12-inch centers.

24 Inches and Larger: Anchor pins spaced 12 inches apart each way. Apply bonding adhesive to prevent sagging of the insulation.

Overlap joints 3 inches. Seal joints, breaks, and punctures with vapor barrier compound.

Foil and Paper Jackets (FP): Install jackets drawn tight. Install lap or butt strips at joints with material same as jacket. Secure with adhesive. Install jackets with 1-1/2 inch laps at longitudinal joints and 3-inch wide butt strips at end joints. Seal openings, punctures, and breaks in vapor barrier jackets and exposed insulation with vapor barrier compound.

Jackets for Ductwork Exposed to Weather: Equal to 0.16 aluminum jacket with MEI 44-05 ECO-joint sealant, or EPDM rubber jacket.

Ductwork Exposed to Weather (Contractors Option): Insulate ductwork exposed to weather with 2” foil faced polyisocyanurate insulation board and Flex-Clad 400 jacket.

Flexible Elastomeric Cellular Insulation Exposed to Weather: After adhesive has fully cured, apply K-Flex AL aluminum finish jacket (or equal).

Damper handles: To assist balance contractor, insulator shall assure balancing handles are not covered by insulation or jacket. Insulator shall attach a florescent orange surveyors ribbon to each handle so ribbon will extend below finished ceiling or in areas without ceiling a minimum 3’ 0” length.

END OF SECTION 231250 (April 25, 2016)

HVAC INSULATION SCHEDULE
Greenfield School Administration Office Project - Greenfield, MA

PLEASE NOTIFY ENGINEER (603-352-4841) SEVEN DAYS BEFORE BID IF ANY INSULATION APPLICATIONS ARE MISSING FROM THIS SCHEDULE. THANK YOU.

HVAC PIPING SYSTEMS

GLASS FIBER, 1/2":
TYPE L COPPER CONDENSATE PIPING LESS THAN 1-1/2”.

GLASS FIBER, 1":
TYPE L COPPER CONDENSATE PIPING 1-1/2” AND GREATER.

GLASS FIBER: 1-1/2” FOR PIPES < 1-1/2”, 2” FOR PIPES 1-1/2” AND LARGER
HVAC HOT WATER PIPING.

DUCTWORK INSULATION

INSULATE THE FOLLOWING DUCTWORK:

AC SUPPLY DUCTWORK (ALL AREAS): R-8 GLASS FIBER.

AC RETURN DUCTWORK (EXCEPT IN AIR CONDITIONED AREAS): R-8 GLASS FIBER.

ENERGY RECOVERY UNIT SUPPLY DUCTWORK (ALL AREAS). R-8 GLASS FIBER.
ENERGY RECOVERY UNIT RETURN DUCTWORK: R-8 GLASS FIBER.

NOTES:

R-8 GLASS FIBER:

2.5”@.75 PCF WRAP (R7 INSTALLED); CONCEALED LOCATIONS.
2.0” @ 1.5 PCF WRAP (R6.4 INSTALLED); CONCEALED LOCATIONS.

END OF SCHEDULE 231250

SECTION 231510 - HYDRONIC PIPING AND SPECIALTIES

Part 1 - GENERAL

Submittals: Submit product data. Include rated capacities of selected models, weights furnished specialties and accessories, and installation instructions. Furnish flow and pressure drop curves for diverting fittings and calibrated plug valves, based on manufacturer's testing.

Regulatory Requirements: Comply with the provisions of the following:

ASME B 31.9 "Building Services Piping" for materials, products, and installation. Safety valves and pressure vessels shall bear the appropriate ASME label.

Fabricate and stamp air separators and compression tanks to comply with ASME Boiler and Pressure Vessel Code, Section VIII, Division 1.

ASME "Boiler and Pressure Vessel Code," Section IX, "Welding and Brazing Qualification" for qualifications for welding processes and operators.

International Mechanical Code.

Warranty on Pipe Joints: Provide 3-year warranty on all pipe joints (brazed, welded, soldered, threaded, Victaulic, Pro-Press, or other types of joints). Provide timely (immediate) repairs of all leaking joints or reimburse Owner for cost of repair.

Part 2 - PRODUCTS

General: Provide piping materials and factory-fabricated piping products of sizes, types, pressure ratings, temperature ratings, and capacities as indicated. Where not indicated, provide proper selection as determined by Installer to comply with installation requirements. Provide sizes and types matching piping and equipment connections; provide fittings of materials which match pipe materials used in fuel oil systems. Where more than one type of materials or products are indicated, selection is Installer's option. *Grooved piping systems and pressed fit piping systems employing elastomeric gaskets are not considered an “approved equal,” and may not be substituted for conventional threaded, soldered or welded fitting systems without the written approval of the Engineer.*

Balance Valve Manufacturers: Flow Designs, Bell & Gossett, Tour & Anderson.

Hydronic Specialties Manufacturers: Bell and Gossett, TACO.

Basic Identification: Provide identification in accordance with Mechanical Identification, Section 230190 the following listing:

Pipe and Tubing Materials

Drawn Temper Copper Tubing: ASTM B 88, Type L.

Annealed Temper Copper Tubing: ASTM B 88, Type K.

Steel Pipe: ASTM A 120, Schedule 40, black steel pipe, plane ends.

Steel or Copper Factory Pre-insulated Pipe: See appropriate Division 23 “Pre-Insulated Piping” section.

PP-RCT: Random Copolymer Polypropylene Piping – see Division 22 Section “Polypropylene Piping”.

PEX: PEX piping is not permitted and may not be substituted.

Fittings

Cast Iron Threaded Fittings: ANSI B16.4, Class 125, standard pattern, for threaded joints. Threads shall conform to ANSI B1.20.1.

Malleable-Iron Threaded Fittings: ANSI B16.3, Class 150, standard pattern, for threaded joints. Threads shall conform to ANSI B1.20.1.

Steel Fittings: ASTM 234, seamless or welded, for welded joints.

Wrought-Copper Fittings: ANSI B16.22, streamlined pattern.

Cast Iron Threaded Flanges: ANSI B16.1, Class 125; raised ground face, bolt holes spot faced.

Unions: ANSI B16.39 malleable-iron, Class 150, hexagonal stock, with ball-and-socket joints, metal-to-metal bronze seating surfaces; female threaded ends. Threads shall conform to ANSI B1.20.1.

Dielectric Unions: Threaded or soldered end connections for the pipe materials in which installed; constructed to isolate dissimilar metals, prevent galvanic action, and prevent corrosion.

Flexible Connectors: Stainless steel bellows with woven flexible bronze wire reinforcing protective jacket; minimum 150 psig working pressure, maximum 250°F operating temperature. Connectors shall have flanged or threaded end connections to match equipment connected; and shall be capable of 3/4 inch misalignment.

Joining Materials

Solder Filler Metals: ASTM B 32, 95-5 Tin-Antimony, for heating hot water.

Brazing Filler Metals: AWS A5.8, Classification BAg 1 (Silver).

> WARNING: Some filler metals contain compounds which produce highly toxic fumes when heated. Avoid breathing fumes. Provide adequate ventilation.

Welding Materials: Comply with Section II, Part C. ASME Boiler and Pressure Vessel Code for welding materials appropriate for the wall thickness and chemical analysis of the pipe being welded.

Gaskets and Seals: Provide thickness, material, and type suitable for fluid to be handled, and design temperatures and pressures. Pipe lubricants and sealants such as fluorocarbon resin tape and pipe dopes

(Teflon) are not recommended due to evidence that they are subject to leakage when used with propylene glycol solutions. Do not use Viton A, Neoprene, or Nitrite Buna N gaskets or other materials that are not compatible with propylene glycol at elevated temperatures.

Valves

General duty valves: Gate, globe, check, ball, and butterfly valves are specified in Division-23 Section "Valves." Special duty valves are specified in this Article by their generic name.

Balance Valves: 200 psig water working pressure, 250°F maximum operating temperature, bronze body and ball valve except ductile-iron for 2-1/2” larger. Provide with connections for portable differential pressure meter with integral check valves and seals. Valve shall have identification scale to register degree of valve opening.

Pressure Reducing Valves: diaphragm operated, cast-iron or brass body valve, with low inlet pressure check valve, inlet strainer removable without system shut-down, and noncorrosive valve seat and stem. Select valve size, capacity, and operating pressure to suit system. Valve shall be factory-set at operating pressure and have the capability for field adjustment.

Safety Relief Valves: 125 psig working pressure and 250°F maximum operating temperature; designed, manufactured, tested, and labeled in accordance with the requirements of Section IV of the ASME Boiler and Pressure Vessel Code. Valve body shall be cast-iron, with all wetted internal working parts made of brass and rubber. Select valve to suit actual system pressure and Btu capacity.

Hydronic Specialties

Manual Air Vent: bronze body and nonferrous internal parts; 150 psig working pressure, 225°F operating temperature; manually operated with screwdriver or thumbscrew; and having 1/8 inch discharge connection and 1/2 inch inlet connection.

Automatic Air Vent: designed to vent automatically with float principle; bronze body and nonferrous internal parts; 150 psig working pressure, 240°F operating temperature; and having 1/4 inch discharge connection and 1/2 inch inlet connection.

Diaphragm-Type Expansion Tanks: size and number as indicated; construct of welded carbon steel for 125 psig working pressure, 375°F maximum operating temperature. Separate air charge from system water to maintain design expansion capacity, by means of a flexible diaphragm securely sealed into tank. Provide taps for pressure gauge and air charging fitting, and drain fitting. Support vertical tanks with steel legs or base; support horizontal tanks with steel saddles. Tank, with taps and supports, shall be constructed, tested, and labeled in accordance with ASME Pressure Vessel Code, Section VIII, Division 1.

Air Separator: welded black steel; ASME constructed and labeled for minimum 125 psig water working pressure and 375°F operating temperature; perforated stainless steel air collector tube designed to direct released air into compression tank; tangential inlet and outlet connections; screwed connections up to and including 2" NPS; flanged connections for 1-1/2" NPS and above; threaded blowdown connection; sized as indicated for full system flow capacity.

Diverting Fittings: cast iron body with threaded ends, or wrought copper with solder ends; 125 psig working pressure, 250°F maximum operating temperature. Indicate flow direction on fitting.

Backflow Preventers: Reduced pressure backflow preventer, Watts 909 or equal, two independent check valves with intermediate relief valve; modular bronze body construction; ball valve test cocks; quarter-turn bronze ball shut-offs; maximum pressure drop 13 psi at 8 fps; suitable for 175 psi and 140ºF water, air gap on outlet, size as shown on plans or detail, or if not shown, match line size.

Y-Pattern Strainers: 125 psig working pressure cast-iron body (ASTM A 126, Class B), flanged ends for 2-1/2 inch and larger, threaded connections for 2 inch and smaller, bolted cover, perforated Type 304 stainless steel basket, and bottom drain connection.

Heat Trace: 8 watts per foot, with junction box, and seal kit, glass cloth tape, suitable for service on hot or chilled water piping located outdoors. Manufacturers: Thermon, Raychem.

Differential Pressure Regulator: Honeywell D146M. Size as indicated.

Part 3 - EXECUTION

Pipe Applications

Copper Pipes: Install Type L, drawn copper tubing with wrought copper fittings and solder joints for 2 inch and smaller, above ground, within building. Install Type K, annealed temper copper tubing for 2 inch and smaller without joints, below ground or within slabs. Install pipe below ground in PVC sleeve; install pipe in slab in flexible unicellular insulation.

Steel Pipes: Install steel pipe with threaded joints and fittings for 2 inch and smaller, and with welded joints for 2-1/2 inch and larger.

Factory Pre-insulated Pipe: See appropriate Division 23 “Pre-Insulated Piping” section.

Piping Installation

Locations and Arrangements: Drawings (plans, schematics, and diagrams) indicate the general location and arrangement of piping systems. Locations and arrangements of piping take into consideration pipe sizing and friction loss, expansion, pump sizing, and other design considerations. So far as practical, install piping as indicated.

> Modify piping layout as necessary to suit actual field requirements. Coordinate piping locations to avoid conflict with ductwork, lighting, structural elements.
>
> Provide space to permit insulation applications, with one-inch clearance outside the insulation. Allow six inches space above removable ceiling panels to allow for panel removal. Allow sufficient space for servicing of valves.
>
> For service access, keep all piping, devices and appurtenances a minimum of three feet from any electrical service panel, hinged panel door, or equipment door.

Use fittings for all changes in direction and all branch connections.

Install exposed piping at right angles or parallel to building walls. Diagonal runs are not permitted, unless expressly indicated.

Conceal all pipe installations in walls, pipe chases, utility spaces, above ceilings, below grade or floors, unless indicated to be exposed to view.

Install piping tight to slabs, beams, joints, columns, walls, and other permanent elements of the building. Provide space to permit insulation applications, with 1" clearance outside the insulation.

Allow sufficient space above removable ceiling panels to allow for panel removal.

Locate groups of pipes parallel to each other, spaced to permit applying insulation and servicing of valves.

Core drill through masonry floors and walls as required for passage of piping.

Insure adequate space around all piping passing through partitions to completely eliminate contact of piping with structure and to allow for expansion of piping.

Isolate all 1/2" and 3/4" diameter heating and plumbing piping passing through or near steel or wood studs from structure using acoustical pipe clamps equal to Hubbard Holdrite #255 or #261/2 (1-800-321-0316) or similar products by Acousto-Plumb (1-800-854-3215). Pipes must never contact any structure. Any failure to comply with this requirement will be grounds for the Engineer to request that the GC open previously covered work at the contractor's expense to prove compliance with this requirement throughout the building.

Drains: Install drains at low points in mains, risers, and branch lines consisting of a tee fitting, ball valve, and short threaded nipple and cap.

Exterior Wall Penetrations: Seal pipe penetrations through exterior walls using sleeves and mechanical sleeve seals. Pipe sleeves smaller than 6 inch shall be steel; pipe sleeves 6 inch and larger shall be sheet metal.

Pitch: Install piping at a uniform grade of 1 inch in 40 feet upward in the direction of flow whenever possible.

Unions: Install in pipes 2 inch and smaller at final connections each piece of equipment, and elsewhere as indicated. Unions are not required on flanged devices.

Dielectric Unions: Install to join dissimilar metals.

Flanges: Install on valves and equipment having 2-1/2 inch and larger connections.

Flexible Connectors: Install at inlet and discharge connections to pumps and other vibration producing equipment.

Anchors: Anchor piping to ensure proper direction of expansion and contraction. Expansion loops and joints are indicated on the Drawings and specified in Division 23 Section "Expansion Compensation."

Hangers and Supports

General: Hanger, supports, anchors, and hanger spacing are specified in Division 23 Section "Supports And Anchors."

Pipe Joint Construction

Soldered Joints: Comply with the procedures contained in the AWS "Soldering Manual."

Brazed Joints: Comply with the procedures contained in the AWS "Brazing Manual."

> CAUTION: Remove stems, seats, and packing of valves and accessible internal parts at piping specialties before brazing.
>
> Fill the pipe and fittings during brazing, with an inert gas (i.e., nitrogen or carbon dioxide) to prevent formation of scale.
>
> Heat joints using oxyacetylene torch. Heat to proper and uniform temperature.

Threaded Joints: Conform to ANSI B1.20.1, tapered pipe threads for field cut threads. Join pipe fittings and valves as follows:

> Note the internal length of threads in fittings or valve ends, and proximity of internal seat or wall, to determine how far pipe should be threaded into joint.
>
> Align threads at point of assembly.
>
> Apply appropriate tape or thread compound to the external pipe threads (except where dry seal threading is specified).
>
> Assemble joint wrench tight. Wrench on valve shall be on the valve end into which the pipe is being threaded.
>
> Damaged Threads: Do not use pipe with threads which are corroded or damaged. If a weld opens during cutting or threading operations, that portion of pipe shall not be used.

Welded Joints: Comply with the requirement in ASME Code B31.9-"Building Services Piping."

Flanged Joints: Align flanges surfaces parallel. Assemble joints by sequencing bolt tightening to make initial contact of flanges and gaskets as flat and parallel as possible. Use suitable lubricants on bolt threads. Tighten bolts gradually and uniformly using torque wrench.

Valve Applications

Ball Valves: Install at each branch connection to supply mains, at supply connection to each piece of equipment, and elsewhere as indicated.

Balance Valves: Install at each branch connection to return mains, at return connections to each piece of equipment, and on the outlet of each heating or cooling element and elsewhere as required to facilitate system balancing. *Install such that all components of each balance valve, including adjustment, pressure ports and self-balance cartridge are easily accessible for service.*

Drain Valves: Install at low points in mains, risers, branch lines, and elsewhere as required for system drainage.

Check Valves: Install on each pump discharge and elsewhere as required to control flow direction.
Install pressure reducing valves on hot water generators, and elsewhere as required to regulate system pressure.

Safety Relief Valves: Install on hot water generators, and elsewhere as required by ASME Boiler and Pressure Vessel Code. Pipe discharge to floor without valves. Comply with ASME Boiler and Pressure Vessel Code Section VIII, Division 1 for installation requirements.

Hydronic Specialties Installation

Manual Air Vents: Install at high points in the system, at heat transfer coils, and elsewhere as required for system air venting.

Automatic Air Vents: Install where indicated.

Air Separator: Install combination air separator/strainer in pump suction lines. Install blowdown piping with gate valve; extend to nearest drain.

Pump Discharge Valve: Install pump discharge valves in horizontal or vertical position with stem in upward position. Allow clearance above stem for check mechanism removal.

Expansion Tank: Install diaphragm-type expansion tanks as indicated. Vent and purge air from hydronic system, charge tank with proper air charge to suit system design requirements.

Backflow Preventer: Reduced Pressure Backflow Preventers. Locate in readily accessible location. Connect to domestic water piping. Pipe relief outlet as shown on Drawings, or, if not shown, to nearest floor drain.

Heat Trace Applications: Provide heat trace on above ground exterior heating piping and chilled water piping and chilled water evaporator barrels if not factory supplied.

Differential Pressure Regulator: Install between supply and return after pumps in accordance with manufacturer’s in all systems where VFD’s are not specified for pumps.

Field Quality Control

Preparation for testing: Prepare hydronic piping in accordance with ASME B 31.9 and as follows:

Leave joints including welds uninsulated and exposed for examination during the test. Provide temporary restraints for expansion joints which cannot sustain the reactions due to test pressure. Flush system with clean water. Clean strainers. Isolate equipment that is not to be subjected to the test pressure from the piping. Install relief valve set at a pressure no more than 1/3 higher than the test pressure.

Testing: Test hydronic piping as follows:

Use ambient temperature water as the testing medium, except where there is a risk of damage due to freezing.

Subject piping system to a hydrostatic test pressure which at every point in the system is not less than 1.5 times the design pressure. The test pressure shall not exceed the maximum pressure for any vessel, pump, valve, or other component in the system under test.

After the hydrostatic test pressure has been applied for at least 10 minutes, examine piping, joints, and connections for leakage. Eliminate leaks by tightening, repairing, or replacing components as appropriate, and repeat hydrostatic test until there are no leaks.

Painting

General: Paint all exposed steel or cast iron or wrought iron piping and fittings that are not insulated, including hydronic piping (Black) , oil piping (Black) , and gas piping (Yellow). Paint all steel brackets and support structures in the mechanical room that are not galvanized (Black). Paint all expansion tanks, air separators, and other equipment that is not insulated and that does not come with a finish coat of gloss enamel paint (Blue, to match boilers). Remove all packing labels before painting. Touch up any damaged paint on pumps, boilers and other equipment. There should be absolutely no visible rust anywhere in the mechanical room or elsewhere in the building and any mechanical system components.

Preparation: Clean all equipment before painting and remove all shipping labels. Do not remove warning labels of manufacturer name tags. Use high quality oil based industrial enamel paint.

Adjusting and Cleaning

General: Clean and flush boiler and hydronic piping systems. Remove, clean, and replace strainer screens. After cleaning and flushing hydronic piping system, but before balancing, remove disposable fine mesh strainers in pump suction diffusers.

Marking: Mark calibrated name plates of balance valves after hydronic system balancing has been completed, to permanently indicated final balanced position.

Chemical Treatment: Provide a water analysis prepared by the chemical treatment supplier to determine the type and level of chemicals required for prevention of scale and corrosion. Perform initial treatment after completion of system testing.

Start-Up

General: Before operating the system perform these steps.

Fill system and perform initial chemical treatment.

Check expansion tanks to determine that they are not air bound and that the system is completely full of water.

Open valves to full open position. Close coil bypass valves.

Remove and clean strainers.

Check pump for proper direction.

Set automatic fill valves for required system pressure.

Check air vents at high points of systems and determine if all are installed and bleed air completely (manual type).

Set temperature controls so all terminal units are calling for full flow.

Check operation of automatic bypass valves.

Check and set operating temperatures of boilers to design requirements.

Lubricate motors and bearings.

END OF SECTION 231510

SECTION 231535 – CONDENSATE DRAIN SYSTEM

Greenfield School Administration Office Project - Greenfield, MA

Part 1 - GENERAL

Plumbing Code: Comply with applicable portions of the codes listed in Division 22 Section "Basic Requirements," and other state and local codes.

Part 2 - PRODUCTS

Piping Applications

Above Ground Condensate:
- Type L Copper
- Schedule 40 PVC (allowed ONLY where specifically indicated by Engineer)

Below Ground Condensate:
- Type K Copper
- Schedule 40 PVC (allowed ONLY where specifically indicated by Engineer)

Pipe and Fittings

Type L Copper: Conform to ASTM B88, Type L, hard temper, copper tube. Fittings: ANSI B16.22 streamlined pattern wrought-copper fittings.

Type K Copper: Conform to ASTM B88, Type K, soft temper copper tube. No joints permitted on below ground copper tubing.

Schedule 40 PVC: Pipe and fittings shall be manufactured from PVC compound with a cell class of 12454 per ASTM D-1784 and conform with National Sanitation Foundation (NSF) standards 14 and 61. Pipe shall be iron pipe size (IPS) conforming to ASTM D-1785. Fittings shall conform to ASTM D-2466. All pipe and fittings to be produced by a single manufacturer. Solvent cements shall conform to ASTM D-2564, primer shall conform to ASTM F-656. Do not use PVC for applications where the temperature will exceed 140ºF (use cast iron instead). PVC not allowed on this project unless listed on the first page of the Drainage and Vent Schedule.

Part 3 - EXECUTION

Piping Installation

Placement: Piping locations shown on Drawings are diagrammatic. Modify to suit actual field requirements. Coordinate piping locations to avoid conflict with other piping, ductwork, skylights, lighting, electrical conduit, structural elements, etc. Install above-ground piping tight to slabs, beams, joists, columns, walls, and other permanent elements of the building. Allow six inches space above removable ceiling panels to allow for panel removal. Allow sufficient space for servicing of any items that might require service.

For service access, keep all piping, devices, and appurtenances a minimum of three feet from any electrical service panel, hinged panel door, or equipment door. To avoid hazard from leaks, keep all piping at least 12 inches from any part of the footprint of any electrical service panel or food preparation/storage/serving area/appliance/fixture, extended vertically up to the floor or roof deck above. No DWV piping is allowed within or above a nonstructural ceiling of any room dedicated and named as an electrical room or elevator equipment room.

Route drain piping to avoid passing though exit stairways, even when so indicated on the Drawings.

Concealed Piping: Conceal all above-ground piping in walls, pipe chases, utility spaces, above ceilings, or below grade, unless specifically noted otherwise or permitted by Architect. Exposed piping is allowed in mechanical rooms and water entrance rooms. Coordinate with GC to ensure that all chases and soffits have clear space which is a minimum of four inches larger than the nominal pipe size, to allow for insulation and working clearance.

Exposed Piping: Install exposed piping at right angles or parallel to building walls. Diagonal runs are not permitted unless expressly indicated. Coordinate with Architect prior to installation.

Slope: Install drainage piping pitched down at minimum slope of 1/4 inch per foot (2 percent) for piping 3 inches and smaller, and 1/8 inch per foot (1 percent) for piping 4 inches and larger, unless indicated otherwise elsewhere.

Fittings: Make changes in direction for drainage and vent piping using appropriate 45-degree wyes, half-wyes, or long sweep quarter, sixth, eighth, or sixteenth bends. Sanitary tees or short quarter bends may be used on vertical stacks of drainage lines where the change in direction of flow is from horizontal to vertical, except use long-turn tees where two fixtures are installed back to back and have a common drain. Straight tees, elbows, and crosses may be used on vent lines. No change in direction of flow greater than 90 degrees shall be made. Where different sizes of drainage pipes and fittings are connected, use proper size standard increasers or reducers. Reduction of the size of drainage piping in the direction of flow is prohibited.

Condensate Piping: Provide condensate piping from each HVAC unit that produces condensate, or is indicated as “future cooling.” (“Future cooling” includes the future addition of either condensing units, or a central chiller so that chilled water is circulated through the hydronic piping; units to have cooling include unit ventilators, fan coil units, air handling units, duct coils, etc.) Connect piping to all condensate connections on unit and to drip pan if provided. For each condensate outlet, provide a separate P-trap of sufficient depth and size to maintain the trap seal and to allow flow of condensate. Allow for P-trap depth when mounting equipment.

For rooftop equipment operated year-round, provide closed P-trap in heated space and increase piping downstream of the P-trap by one pipe size (combination drain and vent system). For all other equipment, provide open P-trap (with a vertical open pipe section on the downstream side of the trap) in each condensate line, near unit.

Extend piping as indicated. If not indicated, run piping, as directed by Architect, either (1) inside building to air gap or air break fitting to mop basin, lavatory, sink, floor sink, or floor drain into the sanitary sewer, (2) outside building to grade, (3) for rooftop equipment not operated in the winter, to roof drain, or (4) as specifically approved in writing by Engineer. Do not connect into storm drain piping. For floor-mounted unit ventilators, provide piping inside exterior walls, then to exterior above grade. Insulate interior copper piping per Division 23 Section “Insulation.” Provide accessible cleanouts as described in this Section. If pipe size is not indicated, size piping per “Condensate Pipe Size” paragraph and install at 1/4 inch per foot slope. Provide condensate pumps for all cooling fan coils and unit ventilators which are mounted flush with the ceiling, for other units where required, and for gravity drainage systems where available space does not allow a continuous gravity run.

For interior piping to a mop basin or similar fixture where an exposed pipe draining into the fixture is acceptable to the architect, provide 45-degree down discharge elbow ending one inch above rim, and chrome-plated escutcheon. For interior piping to a sink or similar fixture where an exposed pipe draining into the fixture is NOT acceptable to the architect, pipe concealed within wall, then out to an indirect drain fitting UPSTREAM of the p-trap serving the fixture. For interior piping to a floor drain (with funnel or 1/2 grate), maintain air gap or air break and install so that all condensate goes into the floor drain, with no splashing, and so that grate can be removed. For piping to exterior, provide 45-degree down discharge elbow 8 inches above splash block at grade. For exterior drains from future cooling units, attach cap on exterior end of drain pipe, and do not provide splash block.

In locations where condensate is not approved for discharge into the sanitary sewer system by the authority having jurisdiction (e.g. Hanover NH), pipe condensate to grade or to footing drain even if shown otherwise on Drawings. Coordinate with Architect.

Condensate Pump Piping: Where condensate pumps are provided, run insulated 3/8-inch or 1/2-inch copper tube vertically and/or horizontally as needed and make rigid, water-tight connection to rigid drain pipe that drains by gravity to approved location as indicated above. Size the rigid pipe per “Condensate Pipe Size” paragraph. Insulate all copper condensate piping per Division 23 Section “Insulation.”

Condensate Pipe Size: For piping connection to the unit, match unit connection size or size per the following, or as indicated on the drawings, whichever is larger. For copper piping branches and mains, use the following sizes or match unit connection size, whichever is larger. For copper pipe: for up to five Tons of connected cooling load, provide one inch pipe; for 6 to 30 Tons, 1-1/4 inch; for 31 to 50 Tons, 1-1/2 inch; for 50 to 170 Tons, 2 inches. For plastic pipe, provide DWV fittings and 1-1/2-inch minimum size up to 50 Tons, or for 50 to 170 Tons, 2 inches.

Condensate Pipe Acoustic Isolation: Isolate from structure all 3/8”, 1/2", 3/4", and 1” diameter piping passing through or near steel or wood studs. Use appropriate materials, such as acoustical pipe clamps equal to Hubbard Holdrite (1-800-321-0316) or Acousto-Plumb (1-800-854-3215). Pipes must never contact any structure. Any failure to comply with this requirement will be grounds for the Engineer to request that the GC open previously covered work at the contractor's expense to prove compliance with this requirement throughout the building.

PVC Piping: *Locate only where allowed by Code. For example, do not locate within air plenum or in a non-sprinklered ceiling cavity that is otherwise built with non-combustible materials. In locations where PVC is not allowed, provide Type L copper.*

Supports and Anchors: Hangers, supports, anchors, and spacing are specified in Division 15 Section "Supports and Anchors." Seismic restraints may be required. See Division 15 Section "Seismic Restraints."

Installation of Other Products

Cleanouts: Install in drainage piping (1) as indicated, (2) as required by the Plumbing Code, (3) at each change in direction of piping greater than 45 degrees, (4) at minimum intervals of 50 feet for piping four inches and smaller and 100 feet for larger piping, (5) at base of each vertical soil or waste stack, and (6) at the junction of the building drain and the building sewer.

Condensate Pumps: Provide built-in or field-installed check valve on discharge line. For in-pan models, do not locate pump where condensate could drip onto exposed switch.

Field Quality Control

Protection: Protect drains during remainder of construction period, to avoid clogging with dirt and debris, and to prevent damage from traffic and construction work. Place plugs in ends of uncompleted piping at end of day or whenever work stops.

Inspections: Arrange for inspection of the piping system before concealed or closed-in after system is roughed-in, and prior to setting fixtures. Arrange for a final inspection by the plumbing official to observe the tests specified below and to insure compliance with the requirements of the Plumbing Code.

Piping System Test: Test for leaks and defects all new drainage and vent piping systems and parts of existing systems, which have been altered, extended or repaired. Perform tests in accordance with the authority having jurisdiction, or per the Plumbing Code. Repair all leaks and defects using new materials and retest system or portion thereof until satisfactory results are obtained.

Cleaning: Thoroughly clean drain strainers, domes, and traps. Remove all dirt and debris.

END OF SECTION 231535 (5/28/2013)

SECTION 231675 – VRF MULTIZONE SPLIT SYSTEM HEAT PUMPS

Part 1 - GENERAL

Submittals: Submit product data on Variable Refrigerant Flow (VRF) Multizone Split System Heat Pump units, including capacity at scheduled conditions, dimensioned drawings, and weight. Include a complete list of materials showing model numbers and quantities for each piece of equipment, as well as heating and cooling capacities for each indoor unit at design conditions (for the heating mode this should be the minimum rated outdoor operating temperature). **Factory piping diagrams showing pipe size, length and actual routing must be submitted for approval as part of the submittal package. The contractor must submit their factory training certification as part of the submittal package.**

System Description: The variable capacity, heat pump air conditioning system shall be a Variable Refrigerant Flow split system. The system shall consist of multiple evaporators using PID control, and VRF outdoor unit. The outdoor unit shall be a direct expansion (DX), air-cooled heat pump air-conditioning system, variable speed driven compressor multi zone split system, using R410A refrigerant. The outdoor unit may connect an indoor evaporator capacity up to 130% of the outdoor condensing unit capacity. All indoor units are each capable of operating separately with individual temperature control.

Electrical Requirements: Confirm electrical characteristics, including voltage, phase, power requirements with Electrical Contractor before ordering equipment.

ETL: The units shall be listed by Electrical Laboratories (ETL) and bear the ETL label.

NEC: All wiring shall be in accordance with the National Electric Code (NEC).

Energy Star: The system will bear the Energy Star label.

ISO: The system will be produced in an ISO 9001 and ISO 14001 facility, which are standards set by the International Standard Organization (ISO). The system shall be factory tested for safety and function.

Warranty on Indoor and Outdoor Components: Manufacturer shall provide written warranty, including materials and labor, to replace/repair, within warranty period any failed units or components thereof including but not limited to compressors, fans, valves, electronic components, due to inadequate or defective materials or failure. Contractor shall provide written warranty, including materials and labor, to to repair/replace, within warranty period, any failures due to improper workmanship or assembly, including leakage, breakage, or failure to perform as required. Warranty period shall be 5 years from date of substantial completion for Manufacturer's warranty and three years for Contractor's warranty. Warranty period for compressor shall be 6 years from date of substantial completion.

Part 2 - PRODUCTS

Air-cooled outdoor units: Provide as indicated air-cooled outdoor units of type, capacity, electrical characteristics, and having accessories as scheduled.

Air Indoor Units: Provide as indicated split system air handling units of type, capacities, arrangement, and accessories as scheduled.

Air-to-water heat exchangers: Provide as indicated. Follow all of manufacturer's installation guidelines and recommendations. Ensure that water-circuit pumps are interlocked with HEX unit operation to prevent unit damage.

Heat Recovery: Where heat recovery type systems are specified they may use either a two-pipe or three-pipe configuration. Piping and heat recovery equipment layouts vary significantly between two-pipe and three-pipe systems. If a system is designed as two-pipe system and a manufacturer chooses to provide a three-pipe system (or vice-versa), the manufacturer must provide new CAD drawings on the Architectural floor plans showing the revised pipe routing and heat recovery equipment locations as part of the submittal. Revised equipment locations must be approved by the Architect and Engineer.

Condensate Drain Pan System: Provide condensate drain system in accordance with the International Mechanical code. Provide condensate drain pan with drain outlet at the lowest point of the pan so that there is no standing water in the pan during normal operation.

Water Detection Device: Provide device conforming to UL 508 that will shut off the cooling function in the event that the drain outlet is blocked; locate the sensing portion of this device at a point higher than the drain line connection and below the overflow rim of the pan. Provide auxiliary contacts for connection of an external monitoring and control system so that it can detect when the device has tripped. When available, condensate switches shall be provided by VRF system manufacturer for all units.

Refrigerant Ball Valves: Valves shall be full port type, line size valves with Schroeder Valve for refrigerant service. Valves shall be suitable for use with R-410A and designed for a working pressure of 700 PSI and a temperature range of -40 to 325 °F. Valves shall be provided with a factory insulation kit. Valves shall be installed at each final branch serving an indoor heat pump unit and as shown on plans.

Manufacturers: Mitsubishi Electric Corporation. *Equals from Daiken and LG are allowed ONLY where listed on the Heat Pump Schedule. Please be sure that all Mitsubishi specified attributes will be provided. These attributes include but are not limited to: equal or greater heating capacity at -13F; equal or greater cooling capacity at design; heat recovery (where specified), separate heating and cooling setpoints, ability to operate without overcooling or overheating due to minimum refrigerant flow, and ability for 3x3 ceiling units to accept up to 75 cfm of heat recovery ventilation air. Daikin outdoor units shall be supplied with the "seacoast" version of circuit board coating, whether or not the seacoast version is specified for Mitsubishi (in order to protect against rodent infestation of the Daikin outdoor units). All alternate brands shall provide an equal or better warranty, and shall have a program equal or better to the Mitsubishi Diamond Distributor program. No other brands other than the three listed in this paragraph will be accepted.*

Motor Starters and Disconnects: Motor starters and disconnects are specified in Division 23 section, "Electrical Requirements for Mechanical Equipment."

Refrigerant Piping: *Type ACR copper, in accordance with heat pump manufacturer''s requirements. Provide rigid or soft as noted in Part 3. See Refrigerant Piping Section.*

Part 3 - EXECUTION

General: Install indoor and outdoor units where indicated, in accordance with equipment manufacturer's published installation instructions, and with recognized industry practices. Install units plumb and level, firmly anchored in locations indicated. Coordinate with other work as necessary to interface installation of air handling and outdoor units with other work.

Installation Requirements: The system must be installed by a contractor/dealer who has been trained and is currently certified by the manufacturer. The contractor must be certified prior to the time of bidding (retro-active certification is not acceptable). The contractor must have completed the installation of a VRF multi-zone split system of a similar size prior to the time of the bid. For all Mitsubishi City-Multi systems the contractor must be a Diamond Certified Installer.

Refrigerant Piping Design: *Provide services of factory technical service representative to design refrigeration piping.*

Refrigerant Piping: *Rigid brazed type 'ACR' copper shall be used for all exposed piping and accessible piping. For exposed piping take care to run piping in straight, parallel lines tight to structure. Soft type 'ACR' copper pipe can be used in inaccessible locations such as within walls and above ceiling. Soft type 'ACR' copper pipe shall be used below grade with no joints below grade. Do not install concealed or inaccessible refrigerant joints on any type of pipe under any circumstances. Each refrigerant line shown on the drawings represents two pipes. Connect refrigerant piping to units; run piping so as not to interfere with access to unit. Install furnished field-mounted accessories.*

Refrigerant Ball Valves: Valves may be located either at piping mains or at indoor unit unless otherwise indicated. Apply a small amount of refrigerant oil to the flare face during installation and use a torque wrench to tighten flare connections to manufacturers approved level. Do not overtighten. Carefully install insulator kit and secure with tie bands for additional security.

Concrete Pads: Install ground-mounted units on 6" thick reinforced concrete pad, 6" larger on each side than condensing unit and extending a minimum of 6” above grade. Coordinate installation of anchoring devices. Pads shall be pitched away from buildings, walkways and entrances to prevent ice build-up in these areas.

Outdoor unit frames: All outdoor units not protected from snowfall by a roof, enclosure or other means MUST be mounted on a raised frame to protect from snow damage. The frame height shall be not less than 18”. The frame base shall be made of angle steel or equivalent and shall not exceed that of the width of the unit (to prevent snow and condensate accumulation on the frame) and shall be of sufficient strength to properly support units. The frames shall be made from galvanized steel plate 1.2T and painted with polyester powder to match the color of the unit.

For units installed under roofs or within enclosures the height of the raised frame shall be 6” to allow the unit to shed defrost condensate during the heating mode. Failure to mount unit on raised frame may result in damage from ice build-up on the units.

Electrical Wiring: Install electrical devices furnished by manufacturer but not specified to be factory-mounted. Furnish copy of manufacturer's wiring diagram submittal to Electrical Installer for power wiring. Provide a 115V convenience outlet and a spare electrical circuit at every outdoor unit

location. The spare circuit is for the purpose of future heat trace wiring at the base of the unit in case of defrost condensate build-up.

Electrical Clearances: Provide required electrical clearances to air handling and outdoor unit electrical panels.

Access: Provide access space around air handling and outdoor units for service as indicated, but in no case less than that recommended by manufacturer. Provide access panels for service per manufacturer's instructions and/or as indicated on plans.

Ductwork Connections: Refer to Division-23 "Ductwork" sections. Provide flexible connections on duct connections to air handling units.

Vibration Isolation: Install air handling units with vibration isolators. Provide vibration isolators for all piping connections.

Condensate: Provide trapped condensate drain piping from unit to building drain system as indicated or required. Provide factory condensate pumps for all units as necessary to achieve condensate routing shown on drawings.

Charging: Charge systems with refrigerant and oil, and test for leaks. Repair leaks and replace lost refrigerant and oil.

Temporary Heat: *(Only when explicitly allowed by Architect in the Contract Document.) Protect each return air grille with filtration media with a Minimum Efficiency Reporting Value (MERV) of 8 if air-handling type heat pumps must be used for temporary heating, ventilating or air conditioning during construction. Ductless heat pumps may not be used for temporary heating.*

Cleaning: After construction is completed, clean unit exposed surfaces, vacuum clean coils and inside of cabinets. Retouch any marred or scratched surfaces of factory-finished cabinets, using finish materials furnished by manufacturer. Install clean filter units for units requiring same.

Factory Start-up and Commissioning: Provide services of factory technical service representative to start-up and commission VRF Multizone Split System Heat Pump Systems in accordance with manufacturer's instructions and demonstrate compliance with requirements. Replace damaged or malfunctioning controls and equipment. **All Mitsubishi City-Multi Systems must be commissioned by a Diamond Distributor (equivalent for alternate brands). It is the responsibility of the Distributor to complete the commissioning paperwork and submit them to Mitsubishi to activate the extended warranty. The commissioning report (complete with warranty number provided by Mitsubishi Electric US) must be provided to the owner as part of the O&M manual.**

Note: Turn on power to outdoor units at least 12 hours prior to starting operation. Failure to do so can result in irreversible damage to internal parts.

The commissioning report shall include the following data:

- Record Pressure Test (Holding Pressure)
- Confirmation of Record Drawings
- Record Pipe Lengths

- Record Pipe Diameters
- Additional and Total Refrigerant Volumes
- Addressing of Fan Coils
- Cooling Start Up Check
- Heating Start Up Check
- Complete and Issue Documents and Certificates to Consultant/Client.

Controls Coordination: See Control System specifications sections for additional work by VRF factory, and coordinate with ATC Contractor as indicated or required. For projects with factory provided controls including local controllers (thermostats), touch screen controllers or web-browser enabled controllers a factory technical service representative shall provide on-site owner training. For projects with BACnet integration the manufacturer shall provide support to the ATC contractor to assist in the mapping of all available points.

Balancing: Refer to Division-23 section "Testing, Adjusting, and Balancing" for balancing VRF heat pump air and water systems; not work of this section.

Spare Parts: Provide one complete extra set of filters for each indoor unit, including units with long life reusable filters.

Owner's Training: Provide initial training services at the time of project turn-over. Provide up to 4 hours of initial owner training. For projects with an ATC system this training should be scheduled as part of the comprehensive ATC system training. It should be assumed that this initial training session will occur at a time other than the equipment start-up and commissioning processes and will require a separate site visit. Provide a second 4 hour training session at the owner's request at any time within the first 2 years after project turn-over. Cover the following topics: general instruction on the user interface; questions from Owner. Per Owner, make all requested screen changes of identifiers (names and numbers of rooms, equipment, etc.). Review all screens with Owner. Specifically train on common setpoint adjustments, trends, alarms, maintenance schedules, time schedules and overrides, heating/cooling mode changeover options, and local thermostat lock-out capabilities. Provide written step-by-step instructions for common Owner user interface actions. Training that is conducted informally, or without proper notice, will not be counted toward the required number of hours. Return a signed "Confirmation of Owner's Training and Acceptance of Control System" form when initial training is complete.

END OF SECTION 231675 (revised April 5, 2016)

VRF MULTIZONE HEAT PUMPS
CONTROLS ACCESSORIES SCHEDULE
Greenfield School Administration Office Project - Greenfield, MA

Local Controllers (Thermostats):

Simple MA remote controller, PAC series. Provide one controller for every indoor unit. Locate adjacent to heating thermostat.

Central Controller / User Interface:

Touch screen controller model AG-150–standard series, for up to 50 indoor units. Locate controller where shown on plans or in location approved by architect and owner. Surface mount controller on field provided control panel. Controller provides an interface for time scheduling for the VRF heat pumps and a local user interface.

Drain Pan Level Sensor:

Provide a model DPLS-1 condensate drain pan level switch for every indoor heat pump unit. Switch shall be wired directly to heat pump unit to shut-off cooling operation and indicate a condensate alarm at local and central controller in the event of an alarm condition. If not factory-installed, switches shall be field installed and wired.

Owner's Training:

VRF Projects: Owner training shall be provided by a VRF manufacturer's representative who is familiar with all aspects of the project. As part of the training the owner shall have the option of working with the trainer to set up all initial setpoints, schedules and operating parameters for every VRF control component for the project. The confirmation of owner's training on the following page must be completed and provided to the engineer with project closeout documents.

Initial Settings:

The contractor shall configure the following adjustable settings as follows unless otherwise directed by the owner. The owner may request a change to any of these adjustable settings during the training session:

- All indoor units shall be set with the fans to "variable speed auto" in all modes.
    - Occupied Mode: Auto with "Low" as the minimum speed.
    - Unoccupied Mode: Auto with "Ultra Low" as the minimum speed.

- All indoor units shall be set to control to the thermistor installed in the wired local remote controller (not the thermistor installed in the return air stream).

- The initial setpoints shall be as follows:
    - Cooling: Occupied 75° F. Unoccupied 85° F.

CONFIRMATION OF OWNER'S TRAINING AND ACCEPTANCE OF CONTROL SYSTEM

Project: _____

Owner's representative affirms that:

he/she has read the "Owner's Training" paragraph near the end of the Control Systems Specifications Section, and the "OWNER'S TRAINING" paragraph above, and that

all work and training required to be provided by the Contractor by the time of control system acceptance has been provided, and has been fully satisfactory as far as can be determined at this time.

Training sessions took place at the following place, dates, and times:

_____

_____

_____

_____

_____

_____

Total hours of training provided: _____

Owner's representative: _____

Signed _____

Date _____

Note that, as specified, additional training is required in approximately six months.

END OF CONTROL SCHEDULE (4/25/16)

VRF MULTIZONE HEAT PUMPS
OUTDOOR UNITS
Greenfield School Administration Office Project - Greenfield, MA

OUTDOOR UNIT	
PLAN NO.	HP-1
MANUFACTURER	MITSUBISHI
REFRIGERANT	R-410A
MODEL NO.	PUHY-P144TKMU-A
COOLING	
CAP (MBTUH)	144 @ 80 DB/67 WB, 95 DB
RANGE (F)	23-115
dB(A) @ 3 FT	61
AHRI RATINGS (NON-DUCTED)	
EER	11.8
IEER	20.2
COP	3.72
ELECTRICAL*	
VOLTS	208/230/3/60
MAX FUSE AMPS	60
MIN CIR AMPS	53/49
DIMENSIONS	
"Hx”Wx”D	65 x 69 x 29
WT - LBS.	697
ACCESSORIES (ALL)	DISCONNECT*, SNOW/HAIL GUARDS KIT, FACTORY REFRIGERATION PIPING DESIGN, FACTORY STARTUP, QUICK-SLING STAND.

*NOTE THAT EACH MODULE REQUIRES A SEPARATE POWER FEED AND DISCONNECT. PROVIDE CONVENIENCE OUTLET AT EACH OUTDOOR UNIT.

NOTE: THIS SYSTEM IS CAPABLE OF HEATING AND COOLING, BUT WILL ONLY BE USED FOR COOLING ON THIS PROJECT.

MITSUBISHI VRF MULTIZONE HEAT PUMPS – DRAFT
Indoor Units
Greenfield School Administration Office Project - Greenfield, MA
04/27/16

Plan #	Model #	Unit Type	Cooling Capacity *	Heating Capacity **	Airflow (High/Low)	Sound Pressure (High/Low)	Weight	Dimensions (H x W x D)	Condensate Drain Pipe Diameter	Cond. Pump	Min. Circuit Amps	Max. Fuse Amps
			(BTU/H)	(BTU/H)	CFM	Db(A)	Lbs	In.	O.D, In.		Amps	Amps
Big Ceiling Recessed – 3x3												
HP-B24	PLFY-P24NBMU-E	Clg. Recessed 3x3	24,000	27,000	706/530	34/28	64	10-3/16 x 33-3/32 x 33-3/32	1-1/4	Std.	0.54	15
Ceiling Recessed – 2x2												
HP-C08	PLFY-P08NCMU-E	Clg. Recessed 2x2	8,000	9,000	350/280	38/29	41	8-3/16 x 22-7/16 x 22-7/16	1-1/4	Std.	0.29	15
HP-C12	PLFY-P12NCMU-E	Clg. Recessed 2x2	12,000	13,000	390/320	39/30	44	8-3/16 x 22-7/16 x 22-7/16	1-1/4	Std.	0.35	15
HP-C15	PLFY-P15NCMU-E	Clg. Recessed 2x2	15,000	17,000	390/320	40/31	44	8-3/16 x 22-7/16 x 22-7/16	1-1/4	Std.	0.35	15
Narrow Ceiling Recessed – 1 Way Blow												
HP-N06	PMFY-P06NBMU-E	Clg. Recessed 1-way	6,000	6,700	307/230	35/27	38	9-1/16 x 31-31/32 x 15-9/16	1-1/32	Std.	0.25	15
HP-N08	PMFY-P08NBMU-E	Clg. Recessed 1-way	8,000	9,000	328/258	37/32	38	9-1/16 x 31-31/32 x 15-9/16	1-1/32	Std.	0.25	15

Equal Manufacturers Accepted: Daikin, LG.
Each indoor unit must have cooling capacity equal to or greater than the capacity listed below, and match or exceed all Mitsubishi features.

Capacity Rating Conditions:
*Cooling Mode Nominal Conditions: 80 F Db/67 F Wb Indoor; 95 F Db Outdoor
**Heating Mode Nominal Conditions: 70 F Db Indoor; 47 F Db/43 F Wb Outdoor

Condensate Pumps:
Std. = Includes pump as factory standard.

Kohler and Lewis (603) 352-4841

SECTION 231830 - TERMINAL UNITS

Part 1 - GENERAL

ARI Compliance: Test and rate coils in accordance with ARI 410; fan-coil units in accordance with ARI 440; and unit ventilators in accordance with ARI 330; provide ARI Certified Ratings Seal.

I=B=R Compliance: Test and rate finned radiation in accordance with I=B=R Standards.

UL Compliance: Provide electrical components of terminal units which have been listed and labeled by UL.

Electrical Requirements: Confirm electrical characteristics, including voltage, phase, power requirements with Electrical Contractor before ordering equipment.

Part 2 - PRODUCTS

General: Provide terminal units of lengths or cabinet sizes as indicated and in locations as indicated, and of types, capacities, style, and having accessories as scheduled. Terminal units include finned tube radiation, convectors, cabinet unit heaters, fan coils, unit ventilators, packaged terminal air conditioning units, heating coils, and unit heaters. Confirm with GC or CM that recessed terminal units will fit in walls or ceilings where indicated before ordering.

Condensate Drain Pan System: Condensate drain pans shall be pitched to a low point drain so there is not standing water at any time. Condensate drain pans shall be of sufficient size to capture any possible condensation from valves and other components located in the valve compartment. In the event that condensate pans provided by a manufacturer do not meet these criteria they shall be replaced by the contractor with drain pans that meet these criteria as work of the basebid. Provide a water detection device conforming to UL 508 that will shut off the cooling function in the event that the drain outlet is blocked; locate the sensing portion of this device at a point higher than the drain line connection and below the overflow rim of the pan. Provide auxiliary contacts for connection of an external monitoring and control system so that it can detect when the device has tripped. If the manufacturer does not provide this detection device, the Contractor shall have the Control Contractor provide it.

Insulation: Terminal units shall not have unfaced fiberglass insulation in the air stream. Provide units with factory installed flexible elastomeric insulation on field-modified units by replacing all unfaced fiberglass with flexible elastomeric insulation.

Filters: Filters shall be reasonably clean when units are turned over to the Owner. If filters are not clean provide new filters. In addition, provide a spare set of filters as indicated in Spare Parts Schedule, 231010-S.

Manufacturers: American Air Filter, McQuay, Modine, Runtal, Sterling, or Vulcan, Trane, Sigma.
Manufacturers of Unit Ventilators: American Air Filter
Manufacturers of Radiant Ceiling Panels: Airtex, Aerotech, Sigma, Sterling.
Manufacturers of PTAC's: McQuay.

Part 3 - EXECUTION

General: Coordinate dimensions for specified terminal units with General Contractor and with plans and field conditions to ensure that units will fit where indicated before units are ordered. Confirm the following:

One piece panel radiators will fit between walls, columns and other building elements with piping connections in the correct locations to minimize or avoid exposed pipe, and there is adequate space for expansion.

Electrical outlets are located above radiation enclosures.

Pipe connections are on the proper side(s) of cabinet unit heaters, fan-coils, and unit ventilators.

Recessed convectors and cabinet unit heaters will fit in walls or ceilings.

Duct heating coils will fit above ceilings without obstruction by structure, sprinkler, electrical, piping or other conditions.

All units have proper access to allow cabinets to be fully opened for filter changes and access for other maintenance as required.

Notify Engineer or Architect of any conflicts **before ordering equipment.**

Finned Tube Radiation, Convectors: Install finned tube radiation as indicated, and in accordance with manufacturer's installation instructions. Locate on outside walls as indicated, run cover wall-to-wall unless otherwise indicated and provide as much element as will fit in enclosure. Install end caps where units butt against walls. Install access panels centered in front of each shutoff valve, balancing cock, or temperature control valve.

Panel Radiators: Install panel radiation as indicated, and in accordance with manufacturer's installation instructions. Insure that pipes feeding panel radiator are positioned exactly to line up with fittings on radiators. Provide accessory pipe covers for pipes connecting from the floor. Provide end trim where control valves are connected to radiators. Provide trim and expansion control if two panels longer than 20’ are connected together.

Cabinet Unit Heaters and Fan Coil Units: Install units as indicated, and in accordance with manufacturer's installation instructions. Locate as indicated, coordinate with other trades to assure correct recess size for recessed units, and correct wall opening and louver location for units with outside air supply. Install all horizontal units mounted in spaces with finished ceilings such that the bottom of the unit is flush with the ceiling in order to permit access for maintenance and filter changes. Coordinate the exact locations with the reflected ceiling plan where available. Provide traps on condensate piping.

Packaged Terminal Air Conditioning Units: Install units as indicated, and in accordance with manufacturer's installation instructions. Locate as indicated, coordinate with other trades to assure correct wall opening and louver location.

Unit Ventilators: Install units as indicated, and in accordance with manufacturer's installation instructions. Locate as indicated, coordinate with other trades to assure correct recess size for recessed

units, and correct wall opening and louver location for units with outside air supply. Insure units are absolutely tight to walls with proper seal between outside air opening and wall. Manufacturer's representative shall visit the site to observe the installation of the first unit ventilator to be installed. Install all horizontal units mounted in spaces with finished ceilings such that the bottom of the unit is flush with the ceiling in order to permit access for maintenance and filter changes. Coordinate the exact locations with the reflected ceiling plan where available. Provide traps on condensate piping.

Heating/Cooling Coils: Install heating/cooling coils as indicated, and in accordance with manufacturer's installation instructions. Mount coils on steel supports secure to duct. Provide steel baffles where required to prevent bypassing of air. Pitch coil casings for drainage, not less than 1/8" toward return connections, except where drainage feature is included in coil design. Provide for each hot and chilled water coil unit, water supply, return connection, isolation valves, control valve, balancing valve, as indicated.

Unit Heaters: Install unit heaters as indicated, and in accordance with manufacturer's installation instructions. Hang units from building substrate, not from piping. Mount as high as possible to maintain greatest headroom possible unless otherwise indicated. Support units with rod-type hangers anchored to building substrate. Install piping as indicated. Protect units with protective covers during balance of construction.

Ceiling Radiant Panels: Radiant panel manufacturer shall select lengths such that panels run from wall to wall with proper allowances for expansion. Panels shall be field cut when necessary.

Support outer edge of panels on painted "C" channel wall bracket provided by panel manufacturer. Provide support channels as per manufacturer's recommendation.

Read radiant panel drawings in conjunction with architectural and mechanical drawings. Supply and return piping may have been offset for clarity. Refer to mechanical drawings for pipe sizes and proper locations of main distribution piping, valves and thermostats. For panels installed against an exterior wall, the first tube supplied should be nearest the wall.

Install radiant panels with male tang towards perimeter wall as per details given, with special attention to panel lengths and expansion allowances. Contractor is responsible for verifying all site dimensions before manufacture and installation.

Mechanical contractor to ensure coordination with ceiling contractor regarding
a) Ceiling opening schedule
b) Types of panel support moldings required.
c) Panel and locations

Panel extrusions are provided at the lengths indicated in the radiant panel schedule. Extrusions are supplied with copper tubing positioned 7 inches (178mm) from each end – unless otherwise noted. Assemble panels from radiant extrusions as per Assembly and Installation Instructions. All cutting of panels can be done using circular saw with carbide tip blade for non-ferrous metal. If the coper tubing requires cutting:
a) Carefully lift copper from saddle and cut back as required.
b) End of tubing can be raised with tube bender (available for supplier).
c) Clean heat transfer paste from copper using a solvent before soldering.
d) Press tubing back into saddle as required.

Care must be taken at all times not to mar or soil panel face. It is recommended that installers wear clean white gloves when handling radiant extrusions.

Contractor shall install neoprene coated encapsulated fiberglass matts over radiant panels.

Adjustment and Cleaning of Terminal Units: After construction is completed, including painting, clean unit exposed surfaces, vacuum clean terminal coils and inside of cabinets. Retouch any marred or scratched surfaces of factory-finished cabinets, using finish materials furnished by manufacturer. Install clean filter units for terminals requiring same.

Temporary Heat: Protect all intake and return/exhaust openings of cabinet unit heaters, fan coils, packaged terminal air conditioners, and unit ventilators with 1” tactified filter material if used for temporary heating, ventilating or air conditioning during construction (when allowed).

Balancing: Coordinate with Balancing Contractor to set outside air dampers on all terminal units with outside air to provide scheduled flow rates. Testing, adjusting, and balancing is specified in other Division-23 sections; not work of this section.

END OF SECTION 231830

RADIATION SCHEDULE
Greenfield School Administration Office Project - Greenfield, MA

PLAN TYPE NO.	FTR-1
MANUFACTURER	VULCAN
STYLE	LINOVECTOR II
MODEL NO.	LV4-S14
CABINET	SLOPE TOP
GAUGE	16
HEIGHT	14”
MOUNTING HEIGHT	18” TOP ABOVE FLOOR
WIDTH	5-5/16”
LENGTH	AS INDICATED (FIELD MEASURE)
ELEMENT	
TYPE	COPPER-ALUMINUM
TUBE SIZE	3/4"
FIN SIZE	4-1/4 x 3-5/8
FINS/FOOT	40
TIERS	ONE OR TWO AS INDICATED
LENGTH	WALL-TO-WALL, WITH ELEMENT LENGTH AS INDICATED – ALLOW ADEQUATE SPACE INSIDE ENCLOSURE AT BOTH ENDS FOR VALVES
RATING	
AVERAGE WATER TEMP (°F)	170
TEMP DROP(°F)	20
BTU/HR/FT	1040
FINISH	FACTORY BAKED ENAMEL FINISH - STANDARD COLOR BY ARCHITECT
ACCESSORIES	TRIM AS REQUIRED
	STEEL BRACKET SADDLE HANGERS (NO WIRE HANGERS)
NOTE:	MOUNT WITH BOTTOM OF ENCLOSURE 4 INCHES ABOVE THE FLOOR. COORDINATE ELECTRIC/DATA OUTLET LOCATIONS.

CABINET UNIT HEATERS
Greenfield School Administration Office Project - Greenfield, MA

PLAN NO.	CUH-1
TYPE	FLOOR
MFR.	VULCAN
MODEL	F-1000-02
ARRANGEMENT	
DISCHARGE	BOTTOM
INLET	BOTTOM
RATINGS (LOW SPEED)	
CFM	185
HEATING	
CAP(MBH)	12.8
EAT (º F)	60
GPM	1.5
EWT (º F)	180
WPD (FT)	1.4
ELECTRICAL	
VOLTS	115
HP	1/15
FILTER	THROWAWAY
DIMENSIONS(IN)	35 x 25 x 9-1/2
WEIGHT (LBS)	1002
ROWS / 2 PIPE	1
ACCESSORIES	UNIT SPEED CONTROL, PSC MOTOR WITH SPEED SWITCH, DISCONNECT, THERMAL OVERLOAD PROTECTION.
FINISH	POWDER PAINT FINISH, CUSTOM COLOR BY ARCHITECT.
NOTES	CONFIRM CUH WILL FIT AT LOCATION INDICATED BEFORE ORDERING.

SECTION 231890 - METAL DUCTWORK AND ACCESSORIES

Part 1 - GENERAL

General: Ductwork shown on the drawings is schematic and shows the approximate location of ductwork and other equipment. The exact location will be governed by structural conditions, obstructions, and appearance. This is not to be construed so as to permit redesign of the ductwork system. No deviations from the layout will be made without approval from the Engineer. Do not order or fabricate ductwork prior to coordinating exact location with the structural conditions and all other trades. No request for extra compensation will be considered for hardships encountered which would have been disclosed or made evident by a reasonable coordination of this work.

Red List Chemicals: Products are not to contain LBC Red List chemicals listed in the General Sustainability specifications sections.

Submittals:

> **LBC Submittals:** Refer to Division -1 Sections for specific requirements for submittals.
>
> **Ductwork:** Submit ductwork Fabrication Shop Standards Manual indicating gauges, reinforcing, and similar information for ductwork, fittings, accessories, etc., for the required sizes and static pressure classes to fully demonstrate compliance with SMACNA “HVAC Duct Construction Standards, Metal and Flexible”. The Manual shall be shop specific and submitted for review well in advance of sheet metal installation.
>
> **Ductwork Cleanliness:** Submit construction specifications for ductwork cleanliness, referring to SMACNA "Duct Cleanliness for New Construction Guidelines". Include specifications for removal (internal wipe-down) of oil film from ductwork.
>
> **Adhesives and Sealants:** Submit product information for adhesives and sealants including MSDS and VOC limits and manufacturing location.

Qualifications: Firms regularly engaged in manufacture of metal ductwork, products and accessories of types, materials, and sizes required, whose products have been in satisfactory use in similar service for not less than 3 years.

NFPA Compliance: Comply with NFPA 90A “Standard for the Installation of Air Conditioning and Ventilating Systems”, NFPA 90B “Standard for the Installation of Warm Air Heating and Air Conditioning Systems”, and NFPA 96 "Standard for Ventilation Control and Fire Protection of Commercial Cooking Operations".

SMACNA Compliance: Comply with SMACNA “HVAC Duct Construction Standards, Metal and Flexible”. Comply with SMACNA “IAQ Guidelines for Occupied Buildings Under Construction.” Comply with SMACNA "Duct Cleanliness for New Construction Guidelines".

UL Compliance: Construct, test, and label fire dampers in accordance with UL Standard 555 and 555S, “Fire Dampers and Ceiling Dampers”, latest edition.

IMC Compliance: Comply with the currently enforced edition of the International Mechanical Code for fabrication of metal ductwork.

AMCA Compliance: Test and rate louvers in accordance with AMCA 500, “Test Method for Louvers, Dampers and Shutters”.

Delivery, Storage, And Handling: Store ductwork and accessories inside, above grade, and enclose with waterproof wrapping.

Part 2 - PRODUCTS

Sheet Metal Materials, General: Provide the following materials where indicated. Package and mark sheet metal materials as specified in ASTM A 700.

Galvanized Sheet Steel: Lock-forming quality, ASTM A 924, with G60 zinc coating for interior, dry duct and G90 zinc coating for exterior ducts and any ductwork susceptible to moisture, in accordance with ASTM A 653. Provide mill phosphatized finish for exposed surfaces of ducts exposed to view.

Provide suitable "paint-grip" coating for ductwork that will be painted.

Carbon Steel Sheets: ASTM A 366, cold-rolled sheets, commercial quality, with oiled, exposed matte finish.

Stainless Steel: ASTM A 480, Type 316, sheet form, with No. 4 finish on exposed surface for ducts exposed to view; Type 304, sheet form, with No. 1 finish for concealed ducts.

Aluminum: Alloy 3003-H14.

Reinforcement Shapes and Plates: Unless otherwise indicated, provide galvanized steel reinforcing where installed on galvanized sheet metal ducts. For aluminum and stainless steel ducts provide reinforcing of compatible materials.

Tie Rods: Galvanized steel, 1/4 inch minimum diameter for 36-inch length or less; 3/8-inch minimum diameter for lengths longer than 36 inches.

Joint and Seam Sealant and Flanged Joint Mastics: Non-toxic, water based adhesive-sealant. Equal to United Duct Sealer (Water Based), United McGill Corp.; or Flex Grip, Hardcast. Provide duct sealant specifically designed for flanged duct connections of continuous butyl rubber extrusion, equal to Hardcast Flange Grip #1902-FR.

Total volatile organic compounds (VOCs) shall not exceed the limits of SCAQMD Rule #1168

Mastic Duct Sealing Tape: *2 mil aluminum foil with butyl rubber adhesive. Total thickness of 17 mils, service temperature from -20 F to 200 F. UL-181B-FX and UL 723 compliant. Equal to Shurtape SF 686 or VentureTape 1580P. Acceptable for use on projects with less than $100,000 total HVAC cost or with permission of Engineer at least 10 days prior to bid. Under no circumstances is cloth backed “duct tape” to be used for any HVAC application.*

Fire-Stopping: Refer to appropriate Division 23 Section.

Rectangular Duct and Fitting Fabrication: Except as otherwise indicated, fabricate rectangular ducts with galvanized sheet steel, in accordance with SMACNA “HVAC Duct Construction Standards” Conform to the requirements in the referenced standard for metal thickness, reinforcing types and intervals, tie rod applications, and joint types and intervals. **Minimum duct gage is 24.**

Do not exceed 2:1 aspect ratio except in extraordinary conditions with prior permission from Engineer.

Cross break or bead duct sides that are 11" and larger and are 20 gauge or less, with more than 4 sq. ft. of unbraced panel area, as indicated in SMACNA “HVAC Metal Duct Construction Standard", Figure 1-8, regardless if insulated.

Fabricate elbows, transitions, offsets, branch connections, and other duct construction in accordance with SMACNA “HVAC Metal Duct Construction Standard (2006)”, Figures 4-1 through 4-9, with the following modifications:

Figure 4-2: Type RE1 – Square throat is not permitted. Types RE4, 6, 7, 8, 9, & 10 are not permitted.
Figure 4-3: Use single thickness vanes with 4-1/2″ minimum trailing ends, SP=1-1/2”.
Figure 4-7: Offset types 1& 2 are not allowed. Minimum bell mouth radius shall be 1-1/2”.
Figure 4-8: Figures A & C are not allowed.

Fabricate duct fittings to match adjoining ducts, and to comply with duct requirements as applicable to fittings. Limit angular tapers to 30° for contracting tapers and 20° for expanding tapers.

Button punch snap lock (figure 2-2, type L-2) and internal standing seam joints are not allowed.

Round Duct Fabrication: Except as otherwise indicated, fabricate round ducts with galvanized sheet steel, in accordance with SMACNA “HVAC Duct Construction Standards.” Conform to the requirements in the referenced standard for metal thickness and joint types. Modify the tables and figures as follows:

Table 3-1: All elbows, regardless of duct velocity, shall be 1-1/2" radius to duct diameter.
Figure 3-2: Seam types RL-3, 6A, 6B, 7, are not allowed.
Figure 3-4: Adjustable elbows are not allowed.
Figure 3-5: Non lateral taps may be used only where spatial conditions do not allow lateral taps.
Figure 3-6: Replace the transition length formula listed (L2=A-B) with the following: Limit angular tapers to 30º for contracting tapers and 20º for expanding tapers.

Minimum duct gauge is 24. Fittings shall be one gauge heavier than the duct size requirement, 22 gage minimum.

Aluminum Round Duct Fabrication: Except as otherwise indicated, fabricate round ducts with galvanized sheet steel, in accordance with SMACNA “HVAC Duct Construction Standards.” Conform to the requirements in the referenced standard for metal thickness and joint types. **Minimum duct gage is 032”**.

Spiral Round and Flat Oval Duct Fabrication: "Basic Round Diameter" as used in this article is the diameter of the size of round duct that has a circumference equal to the perimeter of a given sized of flat

oval duct. Except where interrupted by fittings, provide round and flat oval ducts in lengths not less than 12 feet.

Spiral Round Ducts: Where indicated on drawings fabricate round supply ducts with spiral lockseam construction, except where diameters exceed 72 inches with longitudinal butt-welded seams. Comply with SMACNA "HVAC Duct Construction Standards," Table 3-2 for galvanized steel gauges. **Minimum duct gage is 24.**

Flat Oval Ducts: Fabricate flat oval supply ducts with standard spiral lockseams (without intermediate ribs) or with butt-welded longitudinal seams in gauges listed in SMACNA "HVAC Duct Construction Standards," Table 3-4.

Manufacturers: United McGill Corp.; Lindab, Inc.; SEMCO, Inc.

Kitchen Hood Exhaust Ducts: Fabricate kitchen hood exhaust ducts with not less than 16-gauge, carbon steel sheets for concealed ducts and 18-gauge stainless steels for exposed ducts. Weld and flange seams and joints. Conform to NFPA Standard 96. Conform to local code requirements where more stringent.

Dishwasher Hood Exhaust Ducts: Fabricate dishwasher hood exhaust ducts with 18-gauge stainless steels. Weld and flange seams and joints.

Flexible Ducts: As scheduled.

Acoustic Flexible Ducts: As scheduled.

Acoustic Flexible Ducts - Medical Grade: As scheduled.

Underground Ductwork and Fittings: Equal to AQC Industries AKDuct “Blue Duct”. Provide HDPE, food grade, closed cell plastic recycled material with no VOC, conforming to ASTM-D2412. Provide integrally insulated ductwork and fittings with R-10 insulating value without the use of external or internal insulation. Fiberglass or PVC coated galvanized steel is not acceptable.

Manufacturer: AQC Industries.

Hangers and Supports: Fabricate hangers and supports in accordance with SMACNA "HVAC Duct Construction Standards", Figure 4-4, modified as follows:

Wire is not allowed to be used as a hanger support. Provide hangers as detailed for exposed ductwork.

Use powder actuated fasteners only when specifically allowed. Do not use powder actuated concrete fasteners for lightweight aggregate concretes or for slabs less than 4 inches thick.

Stainless Steel Ductwork: For stainless steel ducts, provide stainless steel hanger and support materials.

Hangers Installed In Corrosive Atmospheres: Electro-galvanized, all-thread rod or hot-dipped-galvanized rods with threads painted after installation.

Motor Dampers: Provide motor dampers, of types and sizes indicated. In all cases damper actuators are furnished and installed by the ATC contractor. Provide galvanized steel control dampers with parallel blades for two position control, opposed blades for modulating control. Coordinate damper shaft with ATC Contractor. Provide position indicator (score on the exposed end of the damper shaft) for all dampers.

Low Pressure Manual Balancing Dampers: Provide balancing dampers of type and size as scheduled.

Counterbalanced Relief and Backdraft Dampers: Provide dampers of type and size indicated.

Fire Dampers: Provide fire dampers, of types and sizes indicated. Provide fusible link rated at 212ºF unless otherwise indicated. Curtain must be completely out of the air stream when damper is open. All dampers must be dynamic rated for design class of the duct system and the air velocity.

Smoke Dampers: Provide smoke dampers of types and sizes indicated. Coordinate actuator voltage with Electrical Installer.

Fire/Smoke Dampers: Provide fire/smoke dampers in types and sizes indicated. Provide reuseable UL listed electric link/mechanical lock rated at 212ºF unless otherwise indicated. Provide link activated by either a signal from the fire alarm system or excessive duct ambient temperature.

Manufacturers of Fire, Smoke, and Fire/Smoke Dampers: Prefco, Nailor, Greenheck.

Smoke Vents: Provide smoke vents with double-wall insulated construction, insulated curb, spring assembly with telescopic tubes, motor assembly, control switch, McCabe fusible link, and powder coat finish, complying with smoke vent schedule.

Manufacturers: Nystrom, or equal.

Duct Access Doors: Provide where indicated or required for servicing equipment. Provide insulated doors for insulated ductwork. Provide one size hinged, other side with latching devices per SMACNA "HVAC Metal Duct Construction Standard"; "Duct Access Doors and Panels".

Provide door size 2" less than duct size x 16" for duct size less than 20".

Provide door size 18" x 18" for duct size greater than 20".

Manufacturers: Air Balance; Duro Dyne; Register & Grille; Ruskin; Ventfabrics; or Zurn Industries.

Flexible Connections: Provide LEED certified flexible duct connections wherever ductwork connects to vibration isolated equipment. Construct flexible connections, serviceable from -40F to 250F, of recycled Polyester base materials, flameproof fabric, crimped into duct flanges for attachment to duct and equipment.

Manufacturers: American/Elgen; Duro Dyne; Flexaust; or Ventfabrics.

Ceiling Diffusers, Registers and Grilles: Provide ceiling air diffusers, registers, and grilles that have, as minimum, throw, drop, pressure, and noise criteria ratings for each size device as listed in manufacturer's current data. Provide border styles compatible with adjacent wall and ceiling systems.

Manufacturers: Metalaire, Titus, Krueger, Price.

Louvers: Provide louvers that have minimum free area, and maximum pressure drop for each type as listed in manufacturer's current data, complying with louver schedule.

Provide louvers with frame and sill styles that are compatible with adjacent substrate, and that are specifically manufactured to fit into construction openings with accurate fit and adequate support, for weatherproof installation. Refer to general construction drawings and specifications for types of substrate which will contain each type of louver.

Provide 1/2" square mesh anodized aluminum wire bird screens on inside face of exterior louvers.

Manufacturers: Greenheck.

Part 3 - EXECUTION

General: Install ducts in accordance with the following criteria:

Install ducts with the fewest possible joints.

Use fabricated fittings for all changes in directions, changes in size and shape, and connections. Locate ducts, except as otherwise indicated, vertically and horizontally, parallel and perpendicular to building lines; avoid diagonal runs. Install duct systems in shortest route that does not obstruct useable space or block access for servicing building and its equipment. Install ducts close to walls, overhead construction, columns, and other structural and permanent enclosure elements of building.

Install insulated ducts with 1-inch clearance outside of insulation.

Conceal ducts from view in finished and occupied spaces by locating in mechanical shafts, hollow wall construction, or above suspended ceilings. Do not encase horizontal runs in solid partitions, except as specifically shown.

Electrical Equipment Spaces: Route ductwork to avoid passing through transformer vaults and electrical equipment spaces and enclosures.

Hanging and Supporting: Install as indicated in SMACNA "HVAC Duct Construction Standards."

Protection: Protect as indicated in SMACNA "Duct Cleanliness for New Construction Guidelines", Intermediate Level, or as scheduled or noted otherwise. Protect ductwork during construction in accordance with SMACNA “IAQ Guidelines for Occupied Buildings Under Construction.”

Seal ductwork during transport and storage.

Provide storage area that is clean, dry and minimize exposure to dust.

Provide working area that is clean, dry and protected from the elements.

Wipe down internal surfaces of ductwork immediately prior to installation.

Seal open ends of completed and in-progress ductwork.

Duct System Pressure Class: Construct and install each duct system for the specific duct pressure classification indicated; if not indicated use the 2 inch water gauge pressure classification.

Static Pressure Classifications:

Construct low pressure duct systems to the 2 inch water gauge pressure classifications (variable volume duct upstream of VAV boxes is 2 inches water gauge pressure class).

Construct medium pressure duct systems to the 5 inch water gauge pressure classifications.

Leakage Class: Where ducts are scheduled to be leak tested in specifications Section 231990, “Testing, Adjusting and Balancing”, construct ductwork to ASHRAE Leakage Class 3 (3 cfm/100 ft^2) standards.

Seal Class: Where ductwork is not scheduled to be leak tested, seal all ductwork to SMACNA Seal Class A (all transverse joints, longitudinal seams and duct wall penetrations), regardless of pressure class.

Mastic Duct Sealing Tape: *Install per manufacturer's instructions, including installation temperature, with all surfaces to which tape is applied clean, dry, and free of dust, oil, and other contaminants.*

Installation of Flexible Ducts: For any duct run using flexible ductwork, do not exceed 6'-0" extended length. Install in accordance with SMACNA, "HVAC Duct Construction Standards". Install insulated type flexible ducts in all supply air ductwork with temperature differences to the surrounding areas >10°F, non-insulated or insulated type flexible ducts with temperature differences <10°F and in return air systems. Attach flexible duct to metal duct and end terminals with drawbands on both the inner sleeve and the outer jacket.

Flexible ductwork may be used to make corrections for minor misalignments of metal duct connections to diffusers. The angle of adjustment shall not exceed 30º. Flexible duct shall not be used to make sharp turns or any other configuration that compromises the net free area of the duct.

Support Flexible ducts at maximum 4 feet on center by 26 gage x 1-1/2" galvanized straps, unless otherwise required by manufacturer's field installation instructions.

Kitchen Hood Exhaust Duct Installations: Provide 18 in. minimum clearance from kitchen hood and exhaust ductwork to combustible material except where material is protected in a manner satisfactory to the authority having jurisdiction. Install without dips or traps that may collect residues, except where traps have continuous or automatic residue removal. Install access openings at each change in direction and at 12-foot intervals. Locate on sides of duct 1-1/2 inches minimum from bottom, and fit with grease-tight covers of same material as duct. Do not penetrate fire-rated assemblies.

Provide 18 in. minimum clearance to the interior surfaces of combustible chases and 6 in. minimum clearance to the interior surfaces of noncombustible or limited-combustible chases. Minimum clearances cannot be reduced.

Notify engineer before installation of kitchen exhaust ductwork where minimum clearances cannot be maintained and suitable protection has not been shown or specified.

Dishwasher Exhaust Duct Installations: Install dishwasher exhaust duct systems in accordance with SMACNA "HVAC Duct Construction Standards". Provide welded stainless steel ductwork, pitched back to hood to drain.

Underground Ductwork Installation: Install underground ductwork in accordance with manufacturer's instructions. Use manufacturer's sealant caulk. Provide bedding of sand or light aggregate, backfill with pea gravel, sand, or excavated material if equivalent. Allow 24 hours for sealants to cure, then pressure test ductwork ductwork according to manufacturer's instructions before final connections to equipment.

Installation of Ductwork Accessories: Install ductwork accessories in accordance with manufacturer's installation instructions, with applicable portions of details of construction as shown in SMACNA standards, and in accordance with recognized industry practices to ensure that products serve intended function.

Balancing Dampers: Install balancing dampers at every duct branch on both supply and return ductwork (whether or not specifically indicated on drawings) for all ductwork systems except high-velocity VAV.

Control Dampers: Install control dampers in ductwork as noted on drawings.

Damper Shafts: Score all damper shafts at end to indicate damper position. Applicable for all dampers in all equipment.

Fire Dampers: Install fusible links in fire dampers and adjust for proper action. Fire dampers require a wall opening clearance to allow for expansion of dampers during a fire, refer to manufacturers installation instructions for clearances required.

Duct Smoke Detectors: Mount duct smoke detectors furnished by fire alarm system supplier in main air ducts of air handling units and elsewhere as noted in fire alarm system specifications and drawings.

The 2012 International Mechanical Code requires smokes detectors be located in the return air duct or plenum upstream of any filters for air systems with capacities greater than 2000 cfm; NFPA 90A (2009) requires the smoke detectors be located in the supply duct downstream of the air handler for capacities greater than 2000 cfm. Coordinate exact locations with the Authority having Jurisdiction.

Smoke Vents: Coordinate with other trades for installation in roof where shown, and connection to fire alarm system, and control power.

Access Doors: Install access doors at all fire dampers, smoke dampers, motor dampers, humidifiers, both sides of coils, and other devices requiring access.

Air Inlets and Outlets: Install air outlets and inlets in accordance with manufacturer's written instructions and in accordance with recognized industry practices to ensure that products serve intended

functions. Locate ceiling air diffusers, registers, and grilles, as indicated on general construction "Reflected Ceiling Plans" and "Interior Elevations". Unless otherwise indicated, locate units in center of acoustical ceiling modules. Paint portions of ductwork visible through air inlets and outlets flat black.

Where flexible duct run outs are perpendicular to the outlet of the diffuser, use either a rigid full radius elbow, diffuser box, or flexible duct with elbow support at the diffuser connection.

Louver Installation: Pitch bottom of duct toward louver to allow drainage. Seal duct watertight. Caulk perimeter of louver to building. Provide access as required to service or clean louver screens and dampers.

Temporary Heat: Protect all intake and return/exhaust openings with filtration media when used for temporary heating, ventilating, or air conditioning during construction (when allowed). Provide filtration media with a Minimum Efficiency Reporting Value (MERV) of at least 8 (as determined by ASHRAE 52.2-1999) at each return grille. Replace all filtration media immediately prior to occupancy.

END OF SECTION 231890 (November 20, 2015)

MOTOR, BALANCING AND RELIEF DAMPER SCHEDULE
Greenfield School Administration Office Project - Greenfield, MA

MOTOR DAMPERS

TYPE	INSULATED LOW LEAK
MANUF.	GREENHECK
MODEL	VCD-34
LEAKAGE	2.0 CFM/SF AT 1" W.G. (24x24 DAMPER)
BEARINGS	BRONZE OR SS
SEALS	SILICONE
OPTIONS	FLANGES, LOUVER/DAMPER SLEEVE, TRANSISTIONS
NOTE:	MIN SIZE - 12x12 (INTERNAL MOUNT)

TYPE	LOW LEAK
MANUF.	GREENHECK
MODEL	VCD-43
LEAKAGE	2.0 CFM/SF AT 1" W.G. (24x24 DAMPER)
BEARINGS	BRONZE OR SS
SEALS	SILICONE
OPTIONS	FLANGES, LOUVER/DAMPER SLEEVE, TRANSISTIONS
NOTE:	MIN SIZE - 12x12 (INTERNAL MOUNT)

DAMPER SUBMITTAL SHALL SHOW LEAKAGE RATE FOR EACH DAMPER.

DAMPER MOTOR BY ATC CONTRACTOR, COORDINATE SHAFT.

BALANCING DAMPERS

RECTANGULAR	MEET SMACNA GUIDE WITH DURO DYNE KS-145 (LESS THAN 12”) KS-385 (UP TO 18”) KS-12 (18” AND GREATER)
ROUND	MEET SMACNA GUIDE WITH DURO DYNE KS-145 (LESS THAN 12”) KS-12 (12” AND GREATER)

RAPIT DAMPER REGULATORS AND JIFFY DAMPERS NOT ACCEPTABLE.

SCORE SHAFT TO INDICATE DAMPER POSITION.

DIFFUSER, REGISTER, AND GRILLE SCHEDULE
Greenfield School Administration Office Project - Greenfield, MA

PLAN NO.	S-1
MANUF.	PRICE
MODEL	AMD
FACE	SQ
DAMPER	O-B
MATERIAL	AL
FINISH	W-PC
NOTES	LAY-IN

PLAN NO.	R-1
MANUF.	PRICE
MODEL	81
FACE	E-C
DAMPER	---
MATERIAL	AL
FINISH	W-PC
NOTES	LAY-IN

Note: Provide Buckley TR3 or DCBTR transitions or equivalent.

DIFFUSER, REGISTER, AND GRILLE KEY
Greenfield School Administration Office Project - Greenfield, MA

U/C	-	UNDERCUT (3/4”)
DG	-	DOOR GRILLE
DG/FD	-	DOOR GRILLE W/ FIRE DAMPER
DG/LP	-	DOOR GRILLE (LIGHT PROOF)

NOTE: REFER TO DOOR SCHEDULE FOR COORDINATION OF UNDERCUTS AND DOOR GRILLES. **PROVIDE IF NOT PROVIDED WITH DOORS, COORDINATE WITH GC FOR CUTTING INTO EXISTING DOORS.**

PLAN NO.:

S	-	SUPPLY DIFFUSER, REGISTER, GRILLE
R	-	RETURN (OR EXHAUST) DIFFUSER, REGISTER, GRILLE
T	-	TRANSFER GRILLE

FACE:

SQ	-	SQUARE (OR RECTANGULAR)
H	-	HORIZONTAL FACE BARS
V	-	VERTICAL FACE BARS
PRF	-	PERFORATED
E-C	-	EGG CRATE
D-D	-	DOUBLE DEFLECTION
RND	-	ROUND

DAMPER:

O-B	-	OPPOSED BLADE

MATERIAL:

AL	-	ALUMINUM
ST	-	STEEL
G-STL	-	GALVANIZED STEEL

FINISH:

W-E	-	WHITE ENAMEL
W-PC	-	WHITE POWDER COAT
A-A	-	ANODIZED ALUMINUM
AL	-	ALUMINUM PAINT
G-STL	-	GALVANIZED STEEL

DUCT CLEANLINESS SCHEDULE
Greenfield School Administration Office Project - Greenfield, MA

SMACNA, "DUCT CLEANLINESS FOR NEW CONSTRUCTION GUIDELINES, SMACNA 2000.

LEVEL	INTERMEDIATE
PRODUCTION	NORMAL CARE
DELIVERY	NORMAL CARE
SITE STORAGE	CLEAN, DRY, MINIMIZE DUST
INSTALLATION	CLEAN, DRY WORKING AREA
	WIPE INTERNAL SURFACES OF DUCTWORK BEFORE INSTALALTION
PROTECTION	ALL OPENINGS

SECTION 231933 - AIR TERMINALS

Part 1 – GENERAL

Submittals: Submit maintenance data and parts list for each type of air terminal including "trouble-shooting" maintenance guide. Include this data, product data, shop drawings, and maintenance data in maintenance manual in accordance with requirements of Division 1.

ADC Compliance: Provide air terminals that have been tested and rated in accordance with ADC standards, and bear ADC Seal.

ARI Compliance: Provide air terminals, which have been tested and rated in accordance with ARI 880 "Industry Standard for Air Terminals", and bear ARI certification seal.

Part 2 – PRODUCTS

General: Provide factory-fabricated and tested air terminals as indicated.

Identification: Provide label on each unit indicating Plan Number, cfm range, cfm factory-setting, and calibration curve (if required).

Manufacturers: Enviro-Tech, Metalaire.

Part 3 - EXECUTION

General: Install air terminals as indicated, and in accordance with manufacturer's installation instructions.

Installation: Install each unit level and accurately in position indicated in relation to other work; and maintain sufficient clearance for normal service and maintenance, but in no case less than that recommended by manufacturer.

Connections: Connect ductwork to air terminals in accordance with Division-23 ductwork sections.

Protection: Install air terminals that are free of dust and construction debris. Protect all openings with plastic during construction.

Coordination: Coordinate with other work, including ductwork and duct accessories, as necessary to interface installation of air terminals with other work.

Testing: Upon completion of installation and prior to initial operation, test and demonstrate that air terminals, and duct connections to air terminals, are leak-tight. Repair or replace air terminals and duct connections as required to eliminate leaks, and retest to demonstrate compliance.

Cleaning: Clean exposed factory-finished surfaces. Repair any marred or scratched surfaces with manufacturers touch-up paint.

END OF SECTION 231933

All-In-One
Detailed Submittal Schedule
Terminals

Tag	VAV-125A	VAV-125	VAV-126	VAV-126A
Qty	1	1	1	1
Model	SDV5	SDV5	SDV5	SDV5
Inlet Dia	8	6	8	6
Max Primary (CFM)	450	210	380	240
Min Primary (CFM)	56	50	56	50
Inlet SP (in. w.g.)	1.00	1.00	1.00	1.00
Downstream SP (in. w.g.)	0.25	0.25	0.25	0.25
Max Dis NC	20 (2)	21 (2)	--	23 (2)
Max Rad NC	--	--	--	--
Terminal Liner	SM	SM	SM	SM
Reheat (CFM)	240	165	240	165
WC Capacity (MBH)	9.50	6.50	9.50	6.50
EAT (°F)	55.00	55.00	55.00	55.00
LAT (°F)	90.30	90.40	90.30	90.40
Fluid Flow (GPM)	0.97	0.67	0.97	0.67
FPD (ft wg)	0.57	0.24	0.57	0.24
Rows	1R	1R	1R	1R
Max Air PD (in. w.g.)	0.11	0.05	0.08	0.06
EWT (°F)	180.00	180.00	180.00	180.00
LWT (°F)	160.00	160.00	160.00	160.00
Coil	Water	Water	Water	Water
Sequence	2000	2000	2000	2000
Accessories 1	PS	PS	PS	PS

Tag	VAV-126B	VAV-126C
Qty	1	1
Model	SDV5	SDV5
Inlet Dia	6	10
Max Primary (CFM)	240	760
Min Primary (CFM)	50	100
Inlet SP (in. w.g.)	1.00	1.00
Downstream SP (in. w.g.)	0.25	0.25
Max Dis NC	23 (2)	--
Max Rad NC	--	--
Terminal Liner	SM	SM
Reheat (CFM)	165	320
WC Capacity (MBH)	6.50	12.60
EAT (°F)	55.00	55.00
LAT (°F)	90.40	90.30
Fluid Flow (GPM)	0.67	1.29
FPD (ft wg)	0.24	0.29
Rows	1R	1R
Max Air PD (in. w.g.)	0.06	0.15
EWT (°F)	180.00	180.00
LWT (°F)	160.00	160.00
Coil	Water	Water
Sequence	2000	2000
Accessories 1	PS	PS

Performance Notes

Date Printed: 3/17/2016

1. Dashes (--) indicate NC values less than 20.
2. NC values are calculated based on procedures outlined in AHRI Standard 885-2008, "A Procedure for Estimating Occupied Space Sound Levels in the Application of Air Terminals and Air Outlets."
3. Sound power levels are given in decibels (dB).
4. Dashes (--) indicate sound power levels below 36-29-26-22-19-17 for each octave band; values below these sound power levels are considered below significance per AHRI 880.
5. Minimum operating pressure is the minimum static pressure required to operate the terminal unit assembly at maximum primary flow with a wide open damper.
6. Airflow is given in cubic feet per minute (cfm).
7. Air pressure drop is given in inches water gauge (in. w.g.), and water pressure drop is given in feet of water gauge (ft. w.g.).
8. NC values are derived from sound power levels obtained in accordance with ASHRAE Standard 130-2008 and AHRI Standard 880-2011, which include duct end reflection corrections.
9. Water coil performance is rated and certified in accordance with the latest edition of AHRI Standard 410.

Greenfield School Administration Office Project - Greenfield, MA

SDV5 Single Duct w/ Hot Water Coil

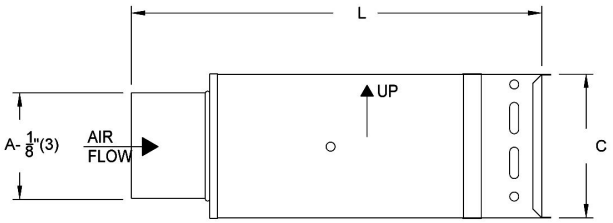

Unit Size	Max Airflow	Outlet		Inlet	Length (L)	
		B	C	A	1-2 Rows	3-4 Rows
8	1100	12	10	8	25 1/8	27 3/8
10	1800	14	12 1/2	10	25 1/8	27 3/8

Digital Controls

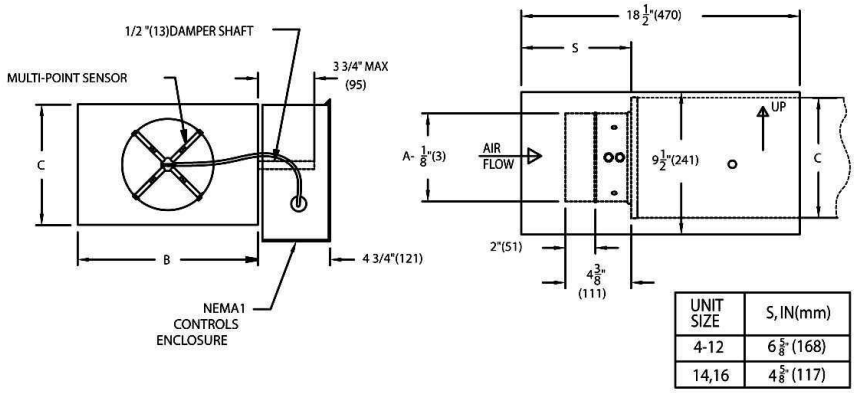

UNIT SIZE	S, IN(mm)
4-12	6 5/8" (168)
14,16	4 5/8" (117)

- Controls are supplied by controls contractor and field installed
- Controls Enclosure will be supplied as illustrated on right hand side unless specified otherwise
- PS - NEMA 1 Controls Enclosure, listed to UL50
- Multi-point Primary Airflow Sensor supplied by Price

Notes

- 22 Ga. zinc coated steel housing. Mechanically sealed and gasketed, leak resistant construction
- Rectangular discharge opening with slip and drive cleat duct connection

AHRI CERTIFIED™
www.ahridirectory.org
VAV Terminals
AHRI Standard 880

Liner SM

Internal Insulation – Fiberglass 3/4" (19mm) thick, min. 1.5# density, meets requirements of NFPA90A and UL 181. Insulation covered with solid metal liner. R-Value = 3.2

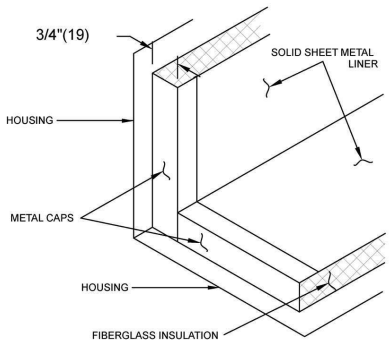

PROJECT: GREENFIELD MA VAV
ENGINEER:
DESCRIPTION: Single Duct - DDC By Others
SDV5//I/2000/8,10/FLD/CFM//1R/0.0///AD////////SM//PS//////////////////////

SUBMITTAL NO: 258148-E
CUSTOMER:

SUBMITTAL DATE: 3/17/2016

231933-S4

© Copyright Price Industries 2016
Marketing Release version: 2.16.3.1, All In One version: 3.16.3

All metric dimensions () are soft converted. Imperial dimensions are converted to metric and rounded to the nearest millimeter.

Greenfield School Administration Office Project - Greenfield, MA

Water Coil 1R

1 Row Right Hand Connection

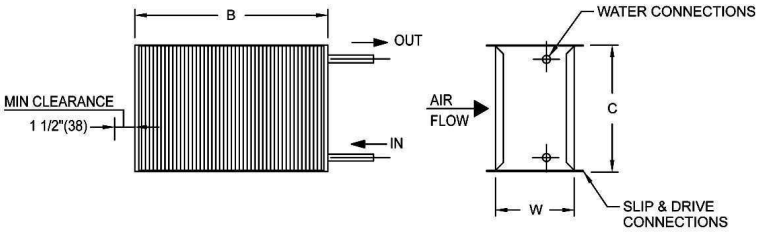

Inlet Size	B	C	Coil Connection ø		W	
			1 Row	2-4 Rows	1-2 Rows	3-4 Rows
7,8	12	10	1/2	7/8	5	7 1/4
9,10	14	12 1/2	7/8	7/8	5	7 1/4

Water Coil Notes

- Fabricated from 22 Ga. galvanized steel mechanically sealed, leak resistant construction
- Configuration of coil connection varies with size & circuitry of coil.
- Performance rated and certified in accordance with the current edition of AHRI standard 410
- Standard coils supplied with 10 fins per inch
- Hot water coils have copper tubes and aluminum fins with O.D. sweat connections
- Refer to submitted terminal unit schedule for air volumes and reheat coil capacities
- Method of venting reheat coil is to be provided by installing contractor
- Hand of water coil connections is determined when viewed from air inlet side

Coil Access Door

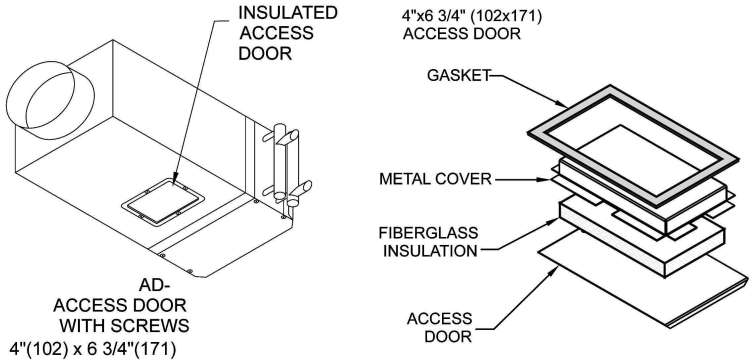

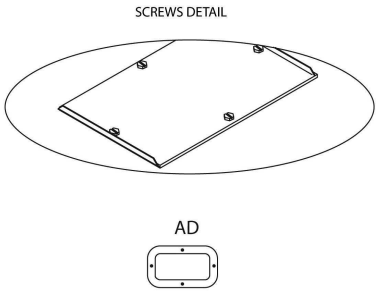

PROJECT: GREENFIELD MA VAV
ENGINEER:
DESCRIPTION: Single Duct - DDC By Others
SDV5//I/2000/8,10/FLD/CFM//1R/0.0///AD////////SM//PS//////////////////////

SUBMITTAL NO: 258148-E
CUSTOMER:

SUBMITTAL DATE: 3/17/2016

231933-S5

© Copyright Price Industries 2016
Marketing Release version: 2.16.3.1, All In One version: 3.16.3

All metric dimensions () are soft converted. Imperial dimensions are converted to metric and rounded to the nearest millimeter.

Greenfield School Administration Office Project - Greenfield, MA

SDV5 Single Duct w/ Hot Water Coil

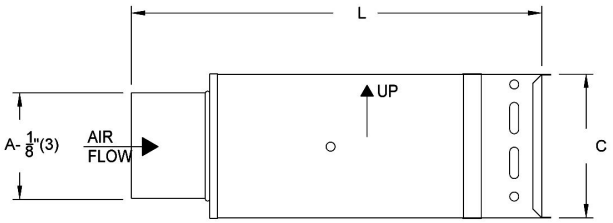

Unit Size	Max Airflow	Outlet		Inlet	Length (L)	
		B	C	A	1-2 Rows	3-4 Rows
6	550	12	8	6	25 1/8	27 3/8

Digital Controls

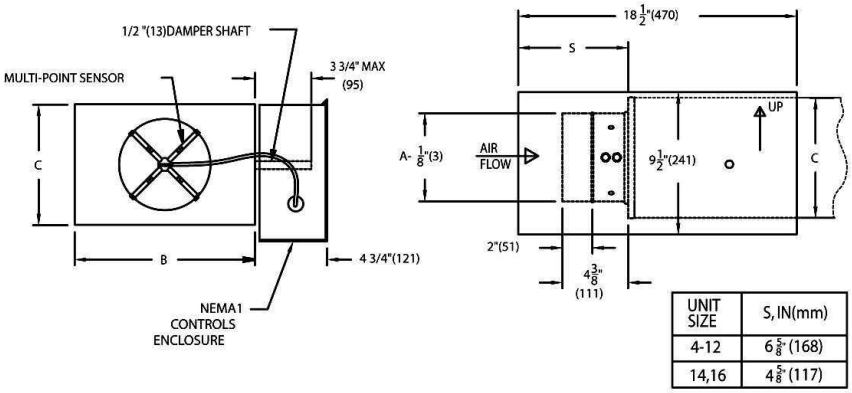

UNIT SIZE	S, IN(mm)
4-12	6 5/8" (168)
14,16	4 5/8" (117)

- Controls are supplied by controls contractor and field installed
- Controls Enclosure will be supplied as illustrated on right hand side unless specified otherwise
- PS - NEMA 1 Controls Enclosure, listed to UL50
- Multi-point Primary Airflow Sensor supplied by Price

Notes

- 22 Ga. zinc coated steel housing. Mechanically sealed and gasketed, leak resistant construction
- Rectangular discharge opening with slip and drive cleat duct connection

AHRI CERTIFIED™
www.ahridirectory.org
VAV Terminals
AHRI Standard 880

Liner SM

Internal Insulation – Fiberglass 3/4" (19mm) thick, min. 1.5# density, meets requirements of NFPA90A and UL 181. Insulation covered with solid metal liner. R-Value = 3.2

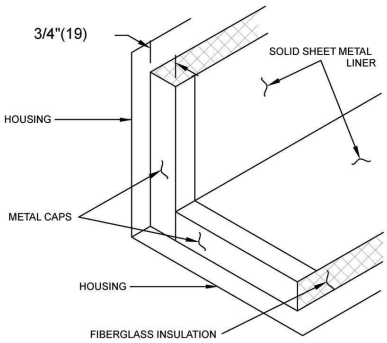

PROJECT: GREENFIELD MA VAV
SUBMITTAL NO: 258148-E
SUBMITTAL DATE: 3/17/2016
ENGINEER:
CUSTOMER:
DESCRIPTION: Single Duct - DDC By Others
SDV5//I/2000/6/FLD/CFM//1R/0.0///AD////////SM//PS//////////////////////

231933-S6

© Copyright Price Industries 2016
Marketing Release version: 2.16.3.1, All In One version: 3.16.3

All metric dimensions () are soft converted. Imperial dimensions are converted to metric and rounded to the nearest millimeter.

Greenfield School Administration Office Project - Greenfield, MA

Water Coil 1R

1 Row Right Hand Connection

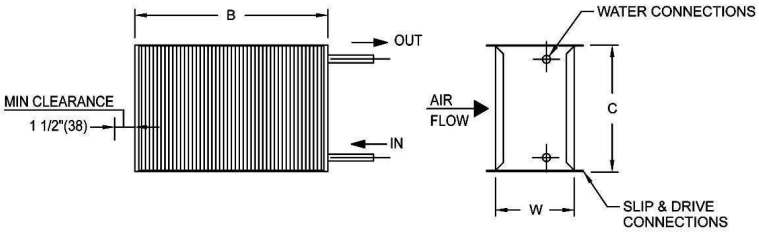

Inlet Size	B	C	Coil Connection ø		W	
			1 Row	2-4 Rows	1-2 Rows	3-4 Rows
4,5,6	12	8	1/2	7/8	5	7 1/4

Water Coil Notes

- Fabricated from 22 Ga. galvanized steel mechanically sealed, leak resistant construction
- Configuration of coil connection varies with size & circuitry of coil.
- Performance rated and certified in accordance with the current edition of AHRI standard 410
- Standard coils supplied with 10 fins per inch
- Hot water coils have copper tubes and aluminum fins with O.D. sweat connections
- Refer to submitted terminal unit schedule for air volumes and reheat coil capacities
- Method of venting reheat coil is to be provided by installing contractor
- Hand of water coil connections is determined when viewed from air inlet side

Coil Access Door

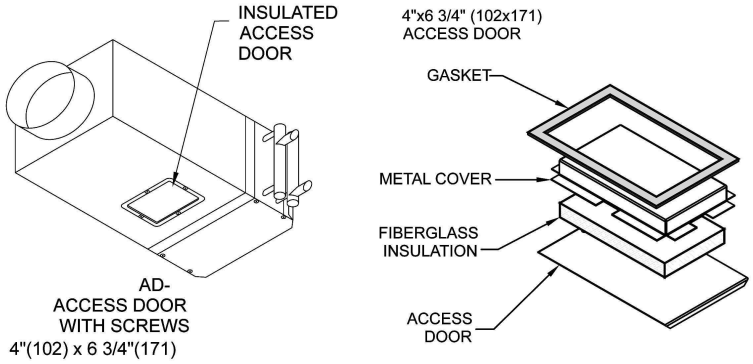

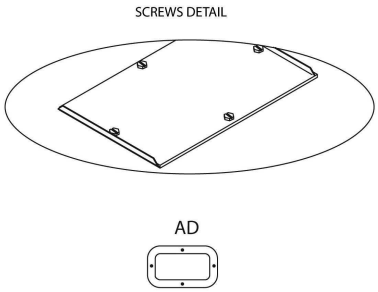

PROJECT: GREENFIELD MA VAV
ENGINEER:
DESCRIPTION: Single Duct - DDC By Others
SDV5//I/2000/6/FLD/CFM//1R/0.0///AD////////SM//PS//////////////////////

SUBMITTAL NO: 258148-E
CUSTOMER:

SUBMITTAL DATE: 3/17/2016

231933-S7

© Copyright Price Industries 2016
Marketing Release version: 2.16.3.1, All In One version: 3.16.3

All metric dimensions () are soft converted. Imperial dimensions are converted to metric and rounded to the nearest millimeter.

SECTION 231971 - DIRECT DIGITAL CONTROL SYSTEM

Part 1 - GENERAL

`

Submittals and Change Orders

Submittals: Provide complete information with detail sufficient for evaluation of compliance with these specifications. Submit on all significant products including all applicable products listed in the Control System Schedule. Note additional specific submittal requirements throughout this Section and in the Sequence of Operations Section. In the controls submittal, at the beginning of the section of cut sheets, include a complete table of contents or material list, including complete model numbers, and place cut sheets in the exact order as shown on the list. See Section 231985 for more information. Provide floor plan drawing(s) showing all room sensor and controller locations, for O&M Manual.

Submittal Meeting: For all projects, ATC Contractor shall deliver Engineer's copy of the control system submittals in person and review them jointly with Engineer in his office in Keene, N. H. At Contractor's option, this may be a draft submittal, allowing corrections to be made *before the official submittal is sent through channels.* ATC Contractor shall obtain a complete set of Contract Documents (or at least the mechanical and electrical portions of the Drawings, Specifications, and Addenda) and bring them to the Submittal Meeting.

Alternate Submittal Meeting: *For Contractors who have successfully completed an in-person submittal review meeting on a previous project as described above, the submittal meeting for this project may at contractor's option be conducted by a remote virtual meeting (gotomeeting, joinme, etc.) initiated by the contractor and with a shared computer screen for reviewing each page of the submittal. The software shall include a markup tool that can be shared by both users to mark up the document as the review proceeds, and each user shall receive an electronic copy of the marked-up document at the conclusion of the meeting.*

Standards

Electrical Standards: Where applicable, provide electrical products that have been tested, listed, and labeled by UL. Comply with NEMA standards pertaining to components and devices for electric control systems. Comply with FCC requirements. Comply with all requirements of electrical inspectors, at no additional cost to Owner.

Accessibility Guidelines: Comply with the "Americans with Disabilities Act" (ADA), and subsequent implementations via state and local regulations, and mount all controls designed for occupant use in accordance with these regulations.

Network Server Software And Updates: *Provide ATC Manufacturer's Network Server Software (HVAC Control System and Graphical User Interface Software) that does not rely on any underlying PC software except the PC operating system, such as Windows. Any and all additional PC software not part of the operating system, such as Java, is explicitly prohibited UNLESS ATC Contractor provides, as part of the base bid price, all required updates to the Network Server Software so that software maintains compliance with Java or other prohibited software. ATC Contractor shall provide these updates of this software during the hardware/software warranty period and for a period of twenty years thereafter. This update work shall include scheduled version updates and also full and satisfactory resolution of any and*

all problems experienced by the Owner as a result of the prohibited software. A STATEMENT OF INCLUSION OF THESE SOFTWARE UPDATES MUST BE ADDED TO THE BID FORM OR THE BID WILL BE REJECTED. IF THE PROHIBITED SOFTWARE IS NOT REQUIRED, THEN A STATEMENT TO THIS EFFECT MUST BE ADDED TO THE BID FORM. If the prohibited software is used, and if at any point within the time period described above, the Owner chooses to enter into a control system service agreement with the ATC Contractor, such service agreement shall include language to clarify that the update work described above is excluded from the service contract and already provided as part of the original construction project.

Electrical Requirements and Coordination With Electrical Contractor (EC):

General: Install electrical components and use electrical products complying with the Electrical Division.

Control Wiring: Line and low voltage control wiring required for the Automatic Temperature Control (ATC) control system and/or any mechanical equipment, that is not shown on electrical drawings, shall be provided by the ATC Contractor. ATC Contractor is responsible for wiring any control devices, remote or otherwise, that may be furnished with any mechanical equipment but are not factory-installed. Coordinate these wiring requirements with the manufacturer supplying this equipment.

Room Sensor and Actuator Wiring: Provide minimum 4-wire cable to each room sensor and to each actuator, even though all wires may not be currently used. Provide more than four wires if needed or specified elsewhere.

Line Voltage Wiring: All line voltage wiring, and low voltage wiring where required by local authority, shall be installed by a licensed electrician.

ATC Power Wiring: Power wiring and all required disconnects and transformers for all direct digital control (DDC) panels, controls, and devices shall be by ATC Contractor or at ATC Contractor's option, shall be coordinated with and provided by EC, where such work is included in the Electrical Contract Documents. Power source for remotely-located control transformers or devices shall originate from local control panels or from equipment being served, and is by ATC Contractor (Electrical Contractor provides circuit and breaker at power panel). Circuit number shall be noted in ATC panel.

AC Electronic Flush Valves and Faucets: MC and ATC subcontractor are responsible for all work not shown in the EC contract documents, in order to make the systems fully operational. Normally, MC provides transformers to EC, who powers and installs them. ATC contractor provides low voltage wiring from transformers to the flush valve or faucet electronic modules.

EC Power Wiring: Power wiring for all mechanical equipment will be provided by the EC. Power panel circuits and circuit breakers shall be provided by the Electrical Contractor. Boiler room emergency (red) shut-off switch is provided by the Electrical Contractor.

Duct Smoke Detectors: Where required, duct smoke detectors shall be furnished and wired, and connected into electrical circuits to stop fans and close dampers in the event of the presence of smoke. This work shall be provided by Electrical Contractor where required by Electrical Contract Documents, and otherwise shall be provided by ATC Contractor. Where duct smoke detectors have auxiliary alarm contacts, ATC Contractor shall use these contacts to inform the DDC system of the event of a smoke

detector trip, to allow the appropriate graphical display, and to prevent the creation of inappropriate alarms such as fan failure.

Smoke Dampers. Smoke dampers are provided by Mechanical Contractor. Electrical Contractor shall connect smoke dampers to fire alarm system, and shall provide power to the smoke dampers. Dampers shall be normally powered open, and damper shall close when smoke is detected. ATC Contractor is not involved with smoke dampers.

Electrical Power Quality: All components provided by ATC Contractor shall work properly with the electrical power quality available at the site at time of project completion, and extending throughout the warranty period. If this is not the case, then ATC Contractor shall replace all defective components, or provide Uninterruptible Power Supplies for all DDC components that fail to work properly, or provide other corrective equipment and labor at no additional cost to Owner, to the satisfaction of the Owner.

Coordination With Mechanical Contractor (MC):

Cooperation: The MC shall provide mechanical equipment submittal data as required by ATC Contractor; a copy of the Maintenance Chart; and receipt, storage, and handling of ATC-furnished control valves at the job site.

ATC-Furnished Items: Except as noted otherwise, the MC shall install the following (and other as required) equipment furnished by the ATC Contractor:

- control valves (coordinate 2-way vs. 3-way),
- immersion wells (example BAPI BA/4”M304, must be machined, not welded),
- water flow switches.

Piping: The MC shall provide all pipe penetrations and provisions for installation of temperature sensors and pressure taps with isolation valves, for devices furnished by the ATC Contractor.

Dampers: The MC shall furnish and install all motor-operated dampers; these are scheduled in other Division 23 Sections. At the option of MC, dampers may be provided by ATC Contractor. In all cases, damper actuators shall be furnished and installed by the ATC Contractor, except for outside air damper actuators which may come with ERUs, RTUs, FCUs or PTACs, and which are compatible with the ATC Contractor’s controller; it is up to the ATC contractor to coordinate these factory-supplied damper actuators and to replace them with ATC contractor damper actuators if necessary.

Duct Smoke Detectors: Mechanical Contractor shall locate and install duct smoke detectors (furnished by Electrical Contractor) in main air ducts of air handling units and elsewhere as noted in mechanical or fire alarm system specifications and drawings.

Speed Controls: Speed controls furnished with mechanical equipment shall be mounted and wired by ATC Contractor.

Variable Frequency Drives: Supplied by MC, specified in Division 23 Section “Variable Frequency Drives.” ATC Contractor provides hard wired start/stop signal and speed monitor interface, and other control interfaces and DDC software as specified elsewhere.

Remote Buttons: ATC Contractor shall install and wire remotely-located pushbuttons, switches, etc. required to operate MC-furnished devices such as solenoid-operated flush valves and gas valves. ATC

Contractor shall provide all buttons, switches, wiring, transformers, solenoid actuators, etc. which are required but not indicated as being provided by MC.

Coordination With Owner

Internet Access: Owner will provide internet access to the DDC Network Controller. This access may be in the form of a DSL connection or any other form as coordinated with Owner. Coordinate access location with owner.

LAN Network: For bidding purposes, ATC Contractor shall plan on providing their own independent LAN if needed for controller-to-controller communication and/or for Web Browser user interface. ATC contractor shall provide a LAN jack in the main mechanical room and at other convenient locations as indicated in the Control System Schedule for connection of a PC for purposes of HVAC system monitoring, or shall provide wireless routers providing service at the same locations. The DDC LAN shall be separate from the Owner's LAN and shall be provided by ATC Contractor. The Owner's LAN shall not be used by ATC Contractor for any purpose whatsoever.

After contract award, ATC Contractor may negotiate with and hire or arrange for Owner or Owner's IT Contractor to provide DDC LAN functions via the Owner's LAN. ATC Contractor must arrange with Owner in a timely manner to provide all needed jack locations, and whether to have a combined LAN, two separate LANS, or a VLAN, etc. Where the DDC system is on the Owner's LAN, ATC Contractor shall coordinate in advance with Owner before assigning any device names to DDC computers or any other DDC devices on the LAN. Any DDC uses of the Owner's LAN MUST be documented in writing, and ATC Contractor shall, at the time of the controls submittal review meeting, submit a signed memo from Owner explaining the agreed-upon arrangement. Virtual Private Networks (VPN's) are allowed ONLY when approved in writing by the Owner.

Network Server: *Coordinate ATC Contractor provided DDC Network Server with Owner, and provide virtual server if so directed by owner. Coordinate location with owner.*

Component Placement: Coordinate Network Controller locations with Owner. Coordinate with Owner the placement and protection of all user-accessible control components such as the Operator's Station, room sensors, modems, auto-dialers, manual reset controllers, and visual/audio alarms. Components visible in occupied spaces shall not have overly large or distracting brand names or other graphics.

Programming: Provide initial programming/setting of all room temperature setpoints, time schedules, alarm points and messages, auto-dialing parameters, and Operator's Station software as requested by Owner.

Programming Tools: At least by the time of the expiration of the two-year warranty, provide to Owner complete programming tools.

Part 2 - PRODUCTS

General

Complete System: Provide DDC control products consisting of controllers, valves, dampers, actuators, sensors, relays, transformers, control panels, wiring, computer systems and other components as required

for complete installation. Devices not specifically listed in this section, yet required by the Division 23 Section “Sequence of Operation,” shall be provided as required, at no additional cost to Owner.

Acceptable Manufacturers / Contractors: Only the pre-qualified manufacturers / contractors listed in the Control System Schedule are acceptable for this project. See Division 23 Section “Basic Requirements,” paragraph “Manufacturers--Control Systems” for information on pre-qualification.

Network

Dedicated Controllers: Units and devices shall be assigned to controllers in an orderly, logical manner. No single controller shall control units or devices on multiple floors, or which serve areas that are not contiguous, without permission of the Engineer. The following HVAC units shall always have an individual, Dedicated Controller: Split System, Rooftop Unit, Water Source Heat Pump, Unit Ventilator, Fan Coil Unit, Packaged Terminal Air Conditioner, Energy Recovery Unit, and Air Handling Unit. Dedicated Controllers are allowed to control auxiliary devices--such as exhaust fans, occupancy sensors, and lighting circuits--that are in the area served by that controller’s HVAC unit, provided that prominent labeling (1/2-inch lettering size) inside the control enclosure discloses the names and locations of the auxiliary devices operated by this controller.

Server: *Unless noted otherwise in the Control System Schedule, ATC Contractor shall provide a DDC Network Server for storage of trend log data and other purposes as required*.

Global Setpoints: Not allowed, except for Balancing Valve Command, Purge Command, Purge Minimum Temperature, Pushbutton Override Time, Software Aquastat Setpoint, and other parameters specifically indicated or approved in writing by Engineer. For example, each zone must have its own Night Setback Setpoint and, where applicable, Discharge Air Low Limit Setpoint. Special global setpoint overrides are allowed for convenience during commissioning, such as global room heating and room cooling setpoints.

Password Protection: Provide minimum three levels of Operator’s Station password protection. Each use shall be recorded and maintained by the system by time, date, changes made, and password. Each remote dial-in and web-based use also shall be logged in as above. Remote logs may be stored in a device separate from the Operator’s Station PC.

Controllers

All Controllers: Provide permanent retention of all software memory including trend logs, during loss of electric power. A battery may be used for clock back-up, if it is field-replaceable and has a minimum life of five years. All controllers shall have communication, input, output, and power connections adequately protected against EMI, lighting, and power fluctuations. Communication lines shall be optically isolated.

Controller Software: All controllers used for the same type of equipment and implementing the same sequences shall have identical software programs. In addition, contractors are encouraged to use one version of software that can accommodate minor sequence differences within the same program; for example, a single zone RTU program could work for either one or two stages of DX cooling.

Controllers with Input/Output: Each actuated device shall be controlled by a separate controller output, unless deviations are specifically authorized by Engineer. Linked damper assemblies may be actuated by a single controller.

Terminal Unit Controllers: Pre-programmed applications software stored in ROM is acceptable if it complies with all relevant sequences of operation. Any custom ROM program created for this project shall not be used on any other project without written permission of the Engineer.

All Controllers Except Terminal Unit Controllers: Applications software shall be fully programmable. Program changes shall be able to be downloaded via the network.

Network Controller: The operating system, applications program, and setpoints shall be stored in nonvolatile memory, or shall have minimum seven-day battery backup in case of power failure. Locate Network Controller in Master Control Panel. In some system designs, there may be multiple Network Controllers.

All graphics screens and archival trend log data (minimum 18 months) can reside in the Network Controller if the project size is such that a single Network Controller can be used. *Where there are multiple Network Controllers, then install the graphics and archival data in the dedicated Network Server.*

Unitary Controllers: The operating system, applications program, and setpoints shall be stored in nonvolatile memory.

Non-DDC Controllers: Except as specifically listed or authorized by Engineer, non-DDC controllers (such as separate electric room thermostats or packaged economizer controllers) shall not be provided. All controllers shall be microprocessor-based and digitally connected to the network.

Auxiliary Devices

Control Valves: Provide valves selected for installation requirements, fluid (including glycol where specified), pressure class, and flow rate; and which mate and match material of connecting piping. Valves shall have a minimum fluid temperature rating of 230°F. Two-position valves shall be line size, or, with permission of Engineer, one size smaller than line size. Two-way valves shall have close-off pressure that is 5 PSI higher than the static head (in feet, divide by 2.3 to get PSI) shown in the pump schedule, minimum 30 PSI. Select C_v for all modulating valves to produce a full-open pressure drop as close to 3 PSI as possible without exceeding 3.40 PSI, except do not go more than two pipe sizes smaller than line size. If available, set “software stops” to 2.0 PSI at “fully open” position. In submittal, list close-off and temperature ratings, GPM, C_v and PSI for all valves. Manufacturers: See Control System Schedule.

Motor-Operated Dampers: Provided by MC; see Division 23 Section “Metal Ductwork” or “Metal Ductwork and Accessories”. Coordinate damper shaft with MC to ensure compatibility with ATC contractor supplied damper actuator.

Damper and Valve Actuators: All actuators shall be designed for a minimum of 60,000 full torque cycles or five years’ operation, whichever is greater; and shall be electrically operated by a controller. Where specified, the “spring-return” function must be satisfied by an actual mechanical spring. Size each actuator to operate dampers or valves with sufficient reserve power to provide smooth operation. Provide modulating or two-position action as specified. Heat motor type actuators are not allowed, except for two-position control with advance approval of Engineer. “Beer can” actuators are not allowed. Linkages on actuators shall be kept as simple as possible. Damper actuators shall be direct-coupled type similar to

Belimo. *Damper and valve actuators shall not make noise that is perceived by building occupants to be objectionable.*

Digital Display Sensors: For all types of sensors, those with digital displays shall be capable of having the displayed reading field calibrated, and the displayed reading shall be equal to the reading transmitted to the controller.

Room Temperature Sensors: Note that room temperature sensors may be designated on the Drawings as "thermostats." Sensing accuracy for all types of sensors: +/- 1.0 °F or better, including A/D conversion, except +/- 2.0 °F above 150 °F.

(1) Adjustable Sensors. Type: See Control System Schedule. Provide one sample of adjustable sensor to Engineer along with or prior to submittals (unless Engineer already has a sample of the identical model). Provide clear plastic locking guards in cafeteria and similar multi-use spaces, and where requested by Owner. Digital sensors shall display the changed setpoint for a minimum of 2.0 seconds before reverting to the default room temperature display.

(2) Nonadjustable Sensors. Type: flush metal plate sensor with vandal-resistant fasteners and complete thermal isolation from the wall. Where required for compatibility with the contractor's selected controller, other types of plain front sensor housings are allowed.

Room Temperature Sensors- All Types: Contractor shall provide a metal guard for sensors when they are installed in hazardous locations such as gyms, or whenever so requested by owner, architect, or engineer.

Duct Temperature Sensors: Provide rigid sensors for small ducts and units, and averaging sensors for airflows above 2000 cfm, with sensing elements minimum 12 feet in length, except 24 feet for airflows above 6000 cfm.

Thermistor Calibration: Thermistor type temperature sensors shall not be field calibrated without specific instruction to do so by Engineer or Commissioning Agent; discrepancies often indicate a field problem such as cold air from inside the wall, and not an inaccurate sensor. All type sensors shall be field calibrated if allowed by manufacturer's instructions, and as requested by Engineer or Commissioning Agent.

Duct Airflow Measuring Stations: Factory calibrated to NIST traceable standards, averaging multi-point sensing; Advanced Thermal Dispersion technology; analog output plus microprocessor controller with LonWorks or BACnet interface; +/- 2% airflow sensor accuracy; includes temperature sensing; Ebtron Model GTx116 (no exceptions).

Relative Humidity Sensors: Capacitive type sensor, ASTM E104.85 calibration, ± 2 % accuracy @ 0-90% RH, interchangeable and replaceable sensor element. Unit must be capable of tolerating and recovering from 100% saturation, with no damage.

Carbon Dioxide Sensors For Room Air: Level A Requirements: (1) range 0-2000 ppm; (2) infrared technology; (3) accuracy at 1000 ppm and 77 °F shall be +/-70 ppm or better; (4) published five-year drift of +/-100 ppm or less over the period (not relying on a "self-calibration" algorithm); (5) for wall mounting; (6) with no digital display of ppm visible with cover in place. At Contractor's option, unit may include sensing of room temperature and/or room RH, if required, and if room temperature setpoint

adjustment or override specifications (if any) are met. Level B Requirements: Same as Level A except (3) accuracy +/-100 ppm and (4) relying on a "self-calibration" algorithm.

Approved Models, Level A: Johnson Controls CD-W series (an OEM version of Vaisala GMW25); Vaisala GMW20 series (accuracy +/-50 ppm, five-year drift less than +/-100 ppm); Vaisala GMW25 (accuracy +/-70 ppm, five-year drift less than +/-100 ppm); or equal approved by Engineer prior to bid.

Approved Models, Level B: AirTest TR9000 series (accuracy +/-70 ppm with self-calibration); Greystone CDD1A (accuracy +/-80 ppm with self-calibration); Honeywell C732A (accuracy +/-100 ppm with self-calibration, drift 20 ppm/year nominal); Telaire Ventostat® 8000 Series "Precision Grade" or "Commercial Grade" products (accuracy +/-75 ppm with self-calibration); Veris CWE and CWL series (accuracy +/-80 ppm with self-calibration)—note – for Veris sensors, replace all broken covers and provide owner with 20% spare parts; or equal approved by Engineer prior to bid.

Not acceptable: Digital Control Systems AirSense Model 310 (accuracy +/-75 ppm, five-year drift less than +/-375 ppm); and Vulcain 90DM3A-SM (uses the Telaire Ventostat® "Commercial Grade" Model 6004 OEM detector without self-calibration).

Carbon Dioxide Sensors For Outside Air: Level A, similar to the above, as recommended by manufacturer for outside air duty; for example, with manufacturer's outside air enclosure rated for ambient temperatures to -20 °F, or using a duct sensor with the electronics in a heated enclosure.

Digital Point Conversion Cards: Not allowed.

Pushbutton Switches: All switches shall be ADA compliant. Provide extended style for all applications, except mushroom style for emergency gas shut-off switches. All pushbuttons on room sensors, thermostats, and other devices for use by building occupants shall have the following characteristics: (1) activation force of 16 oz. or less, (2) tactile "click" feedback.

Condensate Alarm Switch. For every unit with condensate: Provide a water level detection device conforming to the International Mechanical Code and UL 508 that will shut off the equipment served in the event that the primary condensate drain is blocked. The device shall be installed in the primary drain line, the overflow drain line, or in the equipment-supplied drain pan, located at a point higher than the primary drain line connection and below the overflow rim of such pan. Annunciate detected moisture and disable cooling operation at unit as long as moisture is detected. Little Giant ACS-4 or equal. (Normally, the device is provided by the equipment manufacturer, but it is the responsibility of the ATC Contractor to provide it if needed.)

ECM Motors: For speed control of ECM motors (usually provided by others), provide compatible analog output signal such as 0-10 VDC.

Control Panels: Provide master and local control panel enclosures of fully enclosed steel cubical type, with locking doors. Unless not required by the appropriate administrative authority, all enclosures containing two or more electrical devices are assemblies that require approval and labeling by an approved independent third party testing company (such as UL). The Contractor shall be responsible for all costs associated with obtaining all required assembly approval and labeling.

Transformers and Power Supplies: If possible, these shall be made in USA, such as the many models available from Functional Devices.

Part 3 - EXECUTION

General

Installers: Installers shall be properly trained to install, commission and service the system supplied for this project. Installers shall be direct employees of the ATC Contractor, except that qualified subcontractor electricians can be used for the electrical installation portions of the work if all of the following conditions are met:

- An ATC Contractor employee shall properly supervise the subcontractor electrician and shall provide on-site supervision.
- Each subcontractor electrician shall have completed a training program provided by ATC Contractor, and shall conform to ATC Contractor's installation standards.
- ATC Contractor shall submit training program and installation standards to Engineer prior to signing the contract for the project.

See Part I for electrician licensing requirements.

Controllers and Control Panels: Mount controllers in completely accessible locations. Except for VAV box actuator/controller packages (where allowed by Electrical Inspector), mount all controllers inside steel enclosures (Control Panels): either within the HVAC unit Control Panel or a separate Control Panel in a closet or utility room or the like. Generally, do not locate controllers above suspended ceiling unless they are controlling above-ceiling equipment or room terminal equipment such as perimeter radiation. In this case, typically locate Control Panels above corridor ceiling near the areas served, and install permanent identification of these locations, visible from the corridor (coordinate with Architect).

Damper and Valve Actuators: Comply with all programming requirements and recommendations from manufacturer regarding dead bands, pulse durations, etc. For ball valve type actuators, if actuator has not moved within the last 24 hours, exercise it by changing its position by 50% and then returning to the original position. For all actuators, provide ability to skip over a range of valve positions that are found to cause noisy operation.

No actuators shall be located exposed in finished space without advance written approval of Architect and Engineer.

Sensors: It is Contractor’s responsibility to consult Engineer and revise any sensor locations indicated in the Contract Documents as required to ensure that all sensors are installed in locations that are representative of the measured parameters, and to relocate any newly installed sensor, at no extra cost to Owner, as required to achieve this objective. For example, locate boiler leaving water temperature sensor very close to the boiler in order to give an accurate reading.

Room Sensors: Provide a DDC room temperature sensor for every terminal unit, unless specifically indicated otherwise. Omission of a sensor symbol on the plans is <u>not</u> indication to omit the sensor.

(1) Adjustable Sensors. Location: all areas except as noted below or on the Drawings.

(2) Nonadjustable Sensors. Location: storage rooms, closets, entries, corridors, stairwells, toilet rooms, boiler rooms, utility rooms, locker rooms, multipurpose rooms, cafeterias, other "public spaces," and hazardous areas such as gymnasiums.

For all types of room sensors (temperature, carbon dioxide, humidity, etc.): Mount room sensors as required, in a location exposed to representative room air conditions. Do not locate sensors between doorway and light switch, or behind door swing. Wherever possible, locate sensors at least two feet away from doors and operable windows. Never locate sensors where they will be in direct sunlight, or where exposed to any discharge airstream or local heat-producing devices such as boilers, soda machines, and copy machines, or exposed to water flow or spray. Do not locate on exterior walls or where exposed to unconditioned air. Provide air-sealing and thermally-insulating backplate for all wall locations, and seal wiring penetrations to provide a complete air-tight seal. Relocate sensors that no longer comply with all of the above for any reason, including Owner-placed furnishings or equipment.

Coordinate mounting heights with Architect and comply with ADA (see section 4.27): generally, the highest operable part shall be max. 54 inches above the floor where side wheelchair access is possible; or max. 48 inches where only front wheelchair access is possible; or max. 46 inches above a 34 inches high by 24 inches deep cabinet/counter. A typical thermostat location is beside and at the same height as the light switch, on the side of the light switch away from the doorway; coordinate with EC so that light switches and room sensors are mounted at the same height.

Outside Air Sensors: Never locate sensors where they will be in direct sunlight. Provide sun shield as required.

Global OAT sensor for the purpose of disabling/enabling building heating and cooling systems; and Global dewpoint/ RH sensor for the purpose of disabling/enabling economizers: locate on north side of building unless specifically approved otherwise by Engineer.

Unit OAT sensor for the purpose of disabling/enabling economizer cooling: show all proposed locations in control submittal. Suggestions are: on the north or east side of the HVAC unit, four feet above the ground/roof; or at OA louver outside of motor damper or draft back damper. Provide sun shield as required.

Global Roof Outside Air Temperature Sensor: if there are roof-mounted HVAC units with outside air intakes and economizer function, but none of them is rated at 3500 cfm or higher, then provide Global Roof Outside Air temperature sensor at a representative location not in direct sunlight. Show proposed location in control submittal.

Low-Temperature Protection Thermostats: Secure Engineer's written approval before using. In addition to the hard-wired connection to fans/dampers, connect to a digital input of the appropriate Unitary Controller. No manual reset thermostats shall be used; remove or disconnect all factory-mounted manual reset thermostats.

Carbon Dioxide Sensors: Mount on wall, generally adjacent to room temperature sensor, complying with ADA, and in all cases between 36 and 72 inches above finished floor.

Variable Frequency Drives: Locate pressure sensor or sensors according to Contractor's experience and in consultation with Engineer. Provide discrete wiring from sensor(s) to drive's DDC controller.

Electrical Requirements

Control Wiring: The term “control wiring” is defined to include providing of wire, conduit and miscellaneous materials as required for mounting and connecting electric control devices.

Wiring System: Install complete control wiring system for control systems. Conceal wiring, except install wiring in conduit in mechanical rooms and areas where other conduit and piping are exposed. It is not allowed to power any devices inside a control panel using a plug-in transformer at an outlet outside the panel, with unprotected cord going into the panel. Provide multi-conductor instrument harness (bundle) in place of single conductors where number of conductors can be run along common path. Fasten flexible conductors bridging cabinets and doors neatly along hinge side, and protect against abrasion. Tie and support conductors neatly. Number-code or color-code conductors appropriately for identification and servicing of control system. Provide your own support for conduit and cabling unless permitted otherwise by electrical inspector.

Wire: Install circuits over 25-volt with color-coded THWN/THHN wire in EMT, or MC cable as whips to equipment connections. (Liquid-tight conduit in exterior or wet or damp locations.) Install circuits under 25-volt with color-coded No. 18 wire with insulation on each conductor and plastic sheath over all. Provide air plenum cable above plenum rated ceilings.

Protection: Install low voltage circuits located in concrete slabs, masonry walls, or underground in electric conduit. In existing construction where control piping or wiring is surface mounted in occupied rooms and it is not possible to conceal wiring, run wiring in wiremold raceway (color by Architect).

Project Close-Out

Cleaning: Clean factory-finished surfaces. Repair any marred or scratched surfaces with manufacturer's touch-up paint. Remove debris from inside room sensor cases. Remove paint splotches from room sensors. Coordinate with other contractors as required to accomplish the requirements of this paragraph. Replace any control device (controller, sensor, actuator, etc.) that has been painted if Owner concludes that paint has gotten inside the device.

Point to Point Checkout: *Confirm that each input and output is properly matched to its control point and representation on the Graphical User Interface. Submit complete, written log(s) of this checkout prior to Final Control System Review (which will not be scheduled until this log is received and approved).*

Testing and Adjusting: Start-up, test and adjust control systems. Demonstrate compliance with requirements. Replace damaged or malfunctioning control equipment. Provide all support as and when needed by commissioning agent; and by balancing contractor. Resolve any problems uncovered by balancing contractor, and provide Engineer with a list of problems identified and resolved. Provide all graphical trend log graphs as requested by Engineer, and make all required revisions and resubmittals to the satisfaction of the Engineer.

Tuning: Carefully fine-tune all on-off differentials, PID parameters, and optimal start routines. Tune on-off differentials as tightly as possible consistent with maintaining appropriate lifetimes of the cycled devices. Tune PID parameters to eliminate cycling; a small amount of continuing proportional error is much preferable to cycling. Ensure that optimal start routines achieve setpoint by the time of scheduled occupancy.

Final Control System Review: Contractor shall meet with Engineer to thoroughly review the control system. See Schedule for the location of this meeting. Contractor shall take corrective actions per Engineer's punch list, and shall submit itemized confirmation that required actions have been completed.

Owner's Training: Provide training services for not less than the number of hours as listed in the Control System Schedule. Sixty percent of the training shall take place preceding Owner's acceptance of the control system, 20% shall occur approximately six months later, and 20% during Year 2 of the warranty. Provide number of training material packages as requested by Owner; up to one package per four hours of required total instruction. Cover the following topics: general instruction on the user interface; Owner's mechanical equipment; Owner's specific user interface; questions from Owner. Per Owner, make all requested screen changes of identifiers (names and numbers of rooms, equipment, etc.). Review all screens with Owner. Specifically train on common setpoint adjustments, trends, alarms, maintenance schedules, time schedules and overrides, and troubleshooting. Provide written step-by-step instructions for common Owner user interface actions. Training that is conducted informally, or without proper notice, will not be counted toward the required number of hours. Return a signed "Confirmation of Owner's Training and Acceptance of Control System" form when initial training is complete. Where requested by Owner, provide full audio-visual recording of all training sessions on DVD.

Commissioning Support: If a third-party commissioning agent is part of the project, see the Contract Documents prepared by the commissioning agent. If there is no third-party commissioning agent, see Division 23 Section, "HVAC Commissioning"—contact Engineer if this section is missing.

Warranties

Start Date for ATC Warranties: Same as that for the Mechanical Contractor, unless otherwise provided in the Contract Documents, and approved by Architect.

Two-Year Hardware/Software Warranty: The ATC Contractor shall provide a two-year parts and labor warranty, covering all control hardware and software. The warranty shall include semi-annual review of the system and PID tuning by remote access, all calibration and adjustment of devices where required by manufacturer's instructions, and verbal/written response to a reasonable number of Owner questions. During the second year, the ATC Contractor shall provide a refresher training course equal to 20% of the total specified hours.

Five-Year Limited Warranty: The ATC Contractor shall provide a five-year parts and labor warranty on all valve assemblies and damper actuators, and on Level A Carbon Dioxide sensors. For Level B Carbon Dioxide sensors, Contractor shall for a period of five years, annually check the calibration of 10% (minimum two) of the sensors, and if any of the sampled sensors are out of calibration, shall calibrate all the sensors.

END OF SECTION 231971 (updated June 9, 2015)

CONTROL SYSTEM SCHEDULE
Greenfield School Administration Office Project - Greenfield, MA

ACCEPTABLE MANUFACTURERS/CONTRACTORS

Controls shall be provided ty the two existing control contractors for their respective areas of the building and equipment. All existing standards shall be followed when not in conflict with these specifications.

Contractor Information

Siemens – Hartford, Building Technologies Division. Cromwell, CT. Moses Gonzalez Sr., phone 860-754-1278, email moses.gonzalez@siemens.com

SNE Building Systems Inc. East Granby, CT. Joe Rosinski, 860-653-5095 ext 332, email joe.rosinski@snebuildingsystems.com

CONTROLLER POWER AND LOCATIONS

ATC Control power shall come from the local HVAC equipment controlled, or, for all controllers not associated with a single HVAC unit, from an emergency power circuit. See specifications for controller enclosures and locations. Note that controllers are NEVER allowed to be mounted on plywood or otherwise unenclosed and above a suspended ceiling.

REMOTE COMMUNICATION

RC-5: Digital Alarm Notification

Provide alarm messages in the format and to the devices as requested by Owner: email, text, pages, phone, etc. Show in controls submittal what has been worked out with Owner.

OPERATOR'S STATION HARDWARE

OS-11: Intertie to Existing Owner's PC

Revise the Graphical User Interface software on existing Owner's PC.

>OPERATOR'S STATION SOFTWARE

Human Factors Engineering: The PC User Interface shall comply with state-of-the-art design principles of human factors engineering. See, for example: Swain, R. E. (1990). The User-System Interface for Computerized Products—Part I: Design Principles. Human Factors in Practice, Dec. 1990, 16-22. Santa Monica, CA: Human Factors Society.

Implement the following specific rules, as applicable:

1. *Each display shall not exceed 1600 (horizontal) by 900 (vertical) pixel size. All screens, including help and alarm screens, shall comply with this requirement without forcing the use of scroll bars.*

2. Provide a legend, in alphabetical order, that defines ALL abbreviations used on any screen.
3. Provide a Master Information Menu on each screen, showing current outside air temperature, RH, *and dew point.*
4. Provide a Master Navigation Menu on each screen, including Floor Plans, central equipment, rooms/terminal equipment, *Schedules, Trends,* and Help.
5. All screen text and numbers shall be of easily-readable size *and color, with minimum height of 2.0% of screen height.*
6. Minimize the use of all capital letters; initial capitals are recommended.
7. Display real-time data in a single color, and user-adjustable setpoints in a second color. Submit proposed color scheme.
8. Use red for alarm indication. Do not have anything flash, for any reason.
9. All screen colors shall be easily readable when printed. *If using a black or dark background, it must be changed to white when printed.*
10. Use clear, descriptive identifiers, such as “Fan Status,” instead of cryptic abbreviations like “stat.”
11. Provide proper units, such as “°F” or “%,” for all displayed values.
12. Show all modulating actuator positions as “% open.”
13. Display pressures and room and chilled water temperatures to zero or one decimal place, and all other types of values to zero decimal places. *Display runtimes in hours.*
14. If setpoint adjustment is made using increment/decrement buttons, provide limits on the allowable range, and adjust the step change when a button is pressed to produce about 20 to 25 steps within the range. Examples: 60 to 85 °F in 1 °F increments, 0 to 100% in 5% increments.
15. Provide visual *color-coded* indication of any manually overridden setpoint.
16. Show all Floor Plan Displays using the same architectural scale, and show all Orientation Displays using the same scale. The scale of Floor Plan Displays shall be different from that of the Orientation Displays.
17. Show the DHW Master Mixing Valve on one of the Detailed Displays of the Boiler Room / Heating System.
18. Per Owner, make all requested screen changes of identifiers (names and numbers of rooms, equipment, etc.), prior to the completion and Owner acceptance of the training.
19. Show ALL commands with a label ending with the word "command". Example: "Fan Command". Label ALL setpoints with the word “setpoint”. Example: “Room Heating Setpoint”. All other items will be assumed to be "Status" (no special “status” label required). Status example: a thermometer showing °F.
20. *All equipment animation must be based on actual feedback status, not unverified commands.*
21. *If equipment animation is used to indicate on-off status, the animation must be easily discernible (in the opinion of Engineer), or a redundant word display must be added.*
22. At all times and with all devices and computer screen displays, provide truthful information to the user.
23. System response, including indicator lights *on room sensors and other devices,* shall occur within *1.0* second of user action, such as pressing a button.

>ACTUATORS

Provide the following actuators as applicable. Manufacturers: Belimo, Grundfos, Honeywell, or Johnson Controls. *No other "equal" brands accepted. Note 230ºF temperature rating required; see 231971 section.*

A-2: Two-Position, Spring-Return Actuators

Condensate Drain Valve - Fail Open
Boiler Isolation Valves - Fail Open
Heating/Cooling Switchover Valves - Fail To Heating
DHW HX Valve - Fail Closed
Hot Water Coil, CUH, UH, FTR, Convectors, Seasonal Valves - Fail Closed
CUH and UH Control Valves (Heating Only) - Fail Open*
Valance Convectors or Ceiling Radiant Panels – Fail Open*
4-Pipe Terminal Units of all types – Fail Closed
Steam Humidifier Safety Shut-off Valve – Fail Closed
Fan Coil Unit Outside Air Dampers - Fail Closed
Water Source Heat Pump Valves - Fail Open
ERU OA Damper - Fail Closed
ERU Exhaust Damper - Fail Closed
Combustion Air Intake/Relief Upper Louvers - Fail Open
Combustion Air Intake/Relief Lower Louvers - Fail Closed
Combustion Air Fan Intake Louver - Fail Open
Elevator Shaft Vent Louver – Fail Open
*Fail closed if system is 4-pipe heating and cooling

A-3: Modulating, Fail-in-Position Actuators (“Floating” Actuators also acceptable)

Floor- or Wall-Mounted Radiation and Convectors, (Heating Only System)
Duct VAV, Balancing, or Motor Dampers (excluding outside air dampers)

A-4: Modulating, Spring-Return Actuators *Examples of recently approved valves and new valves expected to be approved: Honeywell V58 Series, Invensys/TAC Ball Valves, Johnson Controls VG1000 Series. Not allowed: Siemens Powermite 599 Series.*

Three-Way Hot Water Valve - Fail to Boiler
Chilled Water Coil Valves - Fail Closed – *Note: often these are three-way; see plans.*
AHU/ERU Hot Water Coil Valves - Fail Open
Steam Humidifier Control Valve - Fail Closed
Heat Exchanger Valves – Fail Open
AHU/RTU Outside Air Dampers - Fail Closed
Gravity Ventilator or Exhaust Fan Outside/Relief Air Dampers – Fail Closed
Boiler Room Combustion Air Fan Relief Air Louvers – Fail Open
UV/FCU/Duct Coil - Heating Valve - Fail Open
UV/FCU/Duct Coil - Cooling Valve - Fail Closed
Unit Ventilator Face/Bypass Dampers (not exposed to outside air) - Fail to Face
Unit Ventilator Outside Air Dampers - Fail Closed

>ROOM TEMPERATURE SENSORS

General

Heating room sensor shall match existing, or as follows. Air conditioning room sensors are separate and provided by air conditioning manufacturer.

Adjustable Sensors

All adjustable room sensors on this project shall be identical, except for manufacturer's VRF heat pump room sensors.

RS-12: °F Scale Single Setpoint Sensor With Thermometer*

Required features:

(1) Setpoint adjustment means with accuracy 0.5 °F or better, range 60 - 85 °F*, and label in degrees F. Options: (a) a slide lever (on front, top or side) with minimum six-hundredths (0.06) inch travel per degree F. (b) a slide lever (on front, top or side) with click stops for every degree F or smaller, or (c) two pushbuttons, 1 °F resolution, with visual indication when high/low limits reached.

(2) Override Button: Unlabeled; or labeled “Override,” “Day/Night,” or with sun/moon symbols, etc. It is acceptable to not have a separate override button if pressing either of the setpoint adjustment buttons activates the override function.

(3) Continuous display of room temperature. Options: (a) Analog: mercury-free; minimum range 55-85 °F; minimum size two-hundredths (0.02) inch per degree F; field adjustable if bimetal; and calibrated within 1.5 °F of DDC sensor. or (b) Digital: 0.5 or 1 °F resolution; and calibrated within 0.6 °F of DDC sensor. (The same display may be used for setpoint and for room temperature, one at a time, as long as room temperature is the default display.)

(4) LED or digital display that indicates either occupied/unoccupied mode (preferred) or scheduled/override mode.

>PROJECT CLOSE-OUT

CI-2: Final Control System Review via Virtual Meeting

The Final Control System Field Observation shall take place *as a Virtual Meeting via shared computer screen. Contractor shall be at the project site.*

CI-6: Point to point Checklist

Prior to Final Control System Review, ATC Contractor shall submit a copy of the point-to-point checklist which verifies that each system input and output has been physically verified to be linked to the corresponding representation(s) on the Graphical User Interface Screen(s).

OWNER’S TRAINING

OT-1: Five Hours Training

REQUEST FOR CONTROLS SUBMITTAL MEETING

Project: _____

1.) Confirmation of Review of Project Documents

I have reviewed the complete set of drawings dated:_____

I have reviewed the complete specification dated:_____

I have reviewed the following addenda numbered and dated:_____

_____

I have reviewed the complete mechanical submittal dated:_____

2.) Confirmation of DDC System Design: Please indicate compliance with all applicable items.

[ ] 4 Wire Room Sensor Cable (231971-2).
[ ] Network Coordination with Owner (231971-4).
[ ] Dedicated Controllers (231971-5).
[ ] No Non-DDC Controllers (231971-6).
[ ] USA Transformers (231971-9).
[ ] Room Sensors as specified (231971 Schedule).

3.) Request for Controls Submittal Meeting

Location: Kohler & Lewis office, 70 Island Street, Keene, NH

Proposed Date:_____Alternate Date:_____

Time: 9:30 AM

Note: This is a required form, and must be filled out and submitted to our office in order to schedule the controls submittal review meeting.

>CONFIRMATION OF OWNER'S TRAINING AND ACCEPTANCE OF CONTROL SYSTEM

Project: _____

Owner's representative affirms that:

He/she has read the "Owner's Training" paragraph near the end of the Control Systems Specifications Section, and the "OWNER'S TRAINING" paragraph above, and that

All work and training required to be provided by the Contractor by the time of control system acceptance has been provided, and has been fully satisfactory as far as can be determined at this time. All requested screen changes of identifiers (names and numbers of rooms, equipment, etc.) have been made to the satisfaction of the Owner.

Training sessions took place at the following place, dates, and times:

_____

_____

_____

_____

_____

_____

Total hours of training provided: _____

Owner's representative: _____

Signed _____

Date _____

Note that, as specified, additional training is required in approximately six months.

REQUEST FOR FINAL CONTROL SYSTEM REVIEW

Project: _____

1.) Please attach the following required reports:

[ ] "Confirmation of Owners Training" form if any Owner training sessions have occurred.

[ ] Point to point checklist per specifications page 231971-S8, item CI-6.

[ ] All sample color graphics screens per specification page 231985-2, item #8.

2.) Confirmation of Project Close-Out Work

[ ] Operator's Station Software/Graphical User Interface complete as specified.

[ ] Alarms have been reduced to just a few per day, as specified.

[ ] All PID loops have been properly tuned.

[ ] All time scheduling and optimal start is operating properly.

3.) Request for Final Control System Review Location:

[ ] Kohler & Lewis office, 70 Island Street, Keene, NH

[ ] Virtual meeting via shared computer screen, with Contractor at the project site and Engineer at Engineer's office

[ ] At the project site, with Owner, and the following dates will work for the Owner

Proposed Date: _____

Alternate Date: _____

Time:

[ ] 9:30 AM

[ ] Other: _____

END OF CONTROL SYSTEM SCHEDULE

SECTION 231985 - SEQUENCE OF OPERATIONS

Scope of Work: All equipment described in the Contract Documents shall be controlled, including items whose sequences may be inadvertently omitted. For omitted sequences, Contractors shall refer to the "Sequence of Operation Schedule - Kohler & Lewis Master List," of which each prequalified temperature control contractor has a copy. Prior to and during project Close-Out, ATC Contractor shall make minor revisions to sequences and screens, as directed by Engineer, at no additional cost.

Factory Sequences: *Where certain units come with factory-provided DDC controls, these will come with factory-provided sequences of operation. Where these sequences are to be customized, see the appropriate equipment specifications sections. Include a copy of the factory sequences in the ATC submittal, and pull up these factory sequences as well as ATC sequences as part of the DDC help function.*

Numbering Note: The part of the sequence number before the hyphen indicates the principal relevant Division 23 or 26 specifications section or section series. However, each sequence applies to all applicable devices regardless of their specification section number.

Submittals: Submit shop drawings for each system automatically controlled. Include all systems, including HVAC unit manufacturer control systems, using and integrating information provided by HVAC unit manufacturer.

1. Shop drawings shall be easily readable, **WITH ALL LETTERING AT LEAST THIS BIG**, yet be no larger than 11 x 17 inches.
2. Pages printed back-to-back shall not relate to the same equipment.
3. Include schematic flow diagram of system showing fans, pumps, coils, dampers, valves, wiring, piping, and control devices.
4. Submit separate drawing(s) or list of all zones in which one controller controls more than one HVAC unit. (See "Network Architecture" paragraph in Section 231971.)
5. Include written description of sequences of operation as they will be installed, that is, as they will be given to the programmers, and explicitly note any proposed deviations from the Specifications. List sequences in the same general order as specified and with the sequence numbers. ***It is not acceptable to rewrite or reword the specified sequences UNLESSS the submitted sequences are accompanied by a copy of the specified sequences in which all words of the specified sequences are crossed out, indicating that they have been transferred to the rewritten submitted sequences, or indicating through a series of explanatory notes that certain words have not been incorporated, and stating the reasons.***
6. It is acceptable to submit a verbatim copy the specified sequences and note any proposed modifications, *if so doing complies with the above numbered paragraph;* contact Engineer for electronic copy of the project specifications and include all relevant addenda. If a verbatim copy is submitted, then Contractor is required to at the same time submit a complete cross reference between equipment and sequences. For example:

BLR-1, 2.	550-AL: Boiler Failure Alarm.
	550-BR: Boiler Return Water and Lead-Lag Control.
	550-BT: Boiler Trim.
	971-DE: Equipment Diagnostics.
	971-DT: Temperature Diagnostics.

FTR-1, 2.	830-RC: Radiation and Convector. 971-BV: Valve Balancing. 971-MU: Multiple Units. 971-RI: Room Sensor Indicator Light. 971-RO: Override Button on Room Sensors. 971-RS: Room Setpoints. 971-TM: Occupancy Modes. 971-TS: DDC Time Scheduling.

7. Include cut sheets for all significant products: Reference equipment mark numbers, and include a complete and accurate table of contents of all cut sheets.
8. Submit color graphic screens – first, three typical screens; then, one of each unique screen type. (These submittals are usually made later in the project.) Do no work on screen graphics until the first three screens are approved.
9. Submittals shall comply with the requirements of Division 23 Section "Basic Requirements" and shall be included in the MC's 3-ring submittal binder or shall be in a separate hard-sided 3-ring binder.
10. <u>If there is an energy consultant or a third-party commissioning agent as part of the project, all control submittals shall go to these people first, and Engineer will review the submittals and hold the submittal meeting only after receiving their written review comments.</u>
11. *Revise sequences to conform with actual programming, as part of the O&M Manual submission.*

Work by Electrical Contractor may include, but is not limited to the following sequences if shown in the Schedule: "DHW Recirculation Pump," "Gas Solenoid Valve," "Kitchen Hood and Monitoring," "Exhaust Fan - Continuous," "Exhaust Fan - Light Switch," and "Smoke Dampers."

Abbreviations:

adj.	adjustable via User Interface	HX	Heat Exchanger
AHU	Air Handling Unit	LAT	Leaving Air Temperature
DAT	Discharge Air Temperature	LWT	Leaving Water Temperature
DHW	Domestic Hot Water	MAT	Mixed Air Temperature
ERU	Energy Recovery Unit	OARH	Outside Air Relative Humidity
EAT	Entering Air Temperature	OAT	Outside Air Temperature
EWT	Entering Water Temperature	RAT	Return Air Temperature
HWR	Hot Water Return	RH	Relative Humidity
HWS	Hot Water Supply	RTU	Rooftop Unit

END OF SECTION 231985 (updated August 22, 2011)

SEQUENCE OF OPERATION SCHEDULE
Greenfield School Administration Office Project - Greenfield, MA

Mechanical Equipment

675-VS: VRF Multizone Air Source Heat Pumps – Stand-Alone. *See VRF heat pump specifications section for VRF system control sequences provided by VRF manufacturer/installer. Mount and wire all factory controls as required, including but not limited to central controller, outdoor HP units, indoor HP units, local controllers, remote temperature sensors and drain pan condensate switches.*

800-TC: Condensate Pan Alarm. *For every unit with condensate:* Provide a water level detection device conforming to the International Mechanical Code and UL 508 that will shut off the equipment served in the event that the primary condensate drain is blocked. The device shall be installed in the primary drain line, the overflow drain line, or in the equipment-supplied drain pan, located at a point higher than the primary drain line connection and below the overflow rim of such pan. Annunciate detected moisture and disable cooling operation at unit as long as moisture is detected. Require manual reset before re-enabling cooling. *(Normally, the device is provided by the equipment manufacturer, but it is the responsibility of the ATC Contractor to provide it if needed.)*

830-HU: Cabinet Unit Heater – CUH-1. Keep fan off when fluid temperature falls below 130 ºF (adj.). Provide control valve if indicated on mechanical detail.

Occupied Mode and Unoccupied Mode: Cycle fan and valve to maintain room setpoint.

830-RC: Radiation – FTR-1. Position valve to maintain room setpoint. See Control System Schedule for valve type. Where floating or modulating valves are used, provide software to skip over an adjustable position range in order to avoid potentially noisy operation.

846-SN: Energy Recovery Unit – Existing HRU-3, 4. *Monitor ERU leaving air temperature after gas heater. Monitor RAT.*

Modulate gas heater to maintain DAT setpoint. Reset DAT setpoint as a function of RAT: DAT of 65 ºF (adj.) at 75 ºF (adj.) RAT, to DAT of 75 ºF (adj.) at 65 ºF (adj.) RAT. At all times, maintain a minimum of 55 ºF (adj.) DAT.

933-VC: VAV Boxes – Cooling With Reheat. Monitor and display primary airflow in CFM. Provide hardware or software "smoothing," running averages, etc. if needed to minimize bothersome data fluctuation and too-frequent damper movement. Match existing sequence. Be sure to maintain minimum airflow in reheat mode. Provide complete sequence in control submittals.

Control Equipment

971-RO: Override Button on Room Sensors. Button shall not have to be pressed and held for any specific length of time, but simply pressed and released. Mode change shall occur within 2.0 seconds of button pressing. The room sensor shall visually indicate the mode, match existing sequence, and include this sequence with control submittal.

971-RS: Room Setpoints. Provide initial adjustable setpoints, each set individually for each zone: Occupied heating = 71 °F, Occupied cooling = 76 °F. Match existing Unoccupied setpoint. Provide 5 °F (adj.) differential between the Occupied setpoints, with a nonadjustable minimum of 3 °F. Provide single (non-setback) heating-only setpoint of 55 °F for seldom-occupied spaces such as enclosed vestibules.

END OF SEQUENCE OF OPERATION SCHEDULE

SECTION 231990 - TESTING, ADJUSTING, AND BALANCING

Part 1 - GENERAL

Description of Work: Test, adjust, and balance all air and hydronic mechanical systems as applicable.

HVAC System Cleanliness: Verify that the HVAC systems including ductwork, air handling equipment, and air distribution terminals are visibly clean.

Do not balance HVAC systems until they are visibly clean of dust and debris. Inform Engineer immediately of dirty condition.

Noise and Vibration: Identify systems with potential noise and vibration problems.

Leakage Testing: Provide leakage testing for scheduled ductwork in compliance with SMACNA, "HVAC Air Duct Leakage Test Manual" (1985).

Energy Recovery Unit Testing: Upon completion of installation of energy recovery units, and after balancing has been completed, test units to ascertain percent effectiveness of heat transfer device. Furnish test report, similar to SMACNA Form ER-1-78.

Preliminary Balance Report: Prepare preliminary balancing report and submit to Engineer.

Include recommendations for correcting any balancing, leakage, noise or vibration problems.

Note all deviations from specified control system sequences of operation.

Final Balance Report: Following engineering review of preliminary balance report and DDC system information, make adjustments and supplementary measurements as required. Recheck control system sequences of operation until all sequences have been verified as operating properly. Submit final report.

Submittals: Submit preliminary and final balancing reports. Preliminary balance report is required prior to Engineer's final inspection.

Engineer and Technicians Data: Submit proof that the Test and Balance Engineer assigned to supervise the procedures, and the technicians proposed to perform the procedures meet the qualifications specified.

Certified Reports: Submit testing, adjusting, and balancing reports bearing the signature of the Test and Balance Technician. The reports shall be certified proof that the systems have been tested, adjusted, and balanced in accordance with the referenced standards.

Report Contents: Provide the following minimum information, forms and data:

General Information and Summary: Identify testing, adjusting, and balancing agency, Contractor, Owner, Architect, Engineer, and Project. Include addresses, and contact names and telephone numbers. Include a certification sheet containing the name address, telephone number, and signature of the Test and Balance Technician.

The remainder of the report shall contain the appropriate forms containing as a minimum, the information indicated on the standard report forms prepared by the AABC or NEBB for each respective item and system. Prepare a schematic diagram for each item of equipment and system to accompany each respective report form.

Provide pressure differential profiles for air handling equipment, rooftop units, and other units in diagramatic form.

Control System Sequence of Operation Verification: Note all deviations from specified sequences of operation.

Independent Balancing Agency: Employ the services of an independent testing, adjusting, and balancing agency to be the single source of responsibility to test, adjust, and balance the building mechanical systems identified above, to produce the design objectives. Services shall include checking installations for conformity to design, measurement and establishment of the fluid quantities of the mechanical systems as required to meet design specifications, and recording and reporting the results.

Agency Qualifications: NEBB or AABC certified, or a Professional Engineer registered in the state in which the services are to be performed, or at least three (3) years of successful testing and balancing experience on projects with testing and balancing requirements similar to those required for this project.

Codes and Standards: Comply with the following codes and standards.

AABC: "National Standards For Total System Balance."

NEBB: "Procedural Standards for Testing, Adjusting and Balancing of Environmental Systems."

ASHRAE: ASHRAE Handbook, latest HVAC Applications Volume, Testing, Adjusting, and Balancing Chapter.

Part 3 - EXECUTION

Systems Operation: Systems shall be fully operational prior to beginning procedures. Test, adjust, and balance the air systems before hydronic systems.

Air Systems: Before operating perform these steps:

Check filters for cleanliness.

Check dampers (both volume and fire) for correct and locked position, and temperature control for completeness of installation before starting fans.

Prepare report test sheets for both fans and outlets. Obtain manufacturer's outlet factors and recommended procedures for testing. Prepare a summation of required outlet volumes to permit a crosscheck with required fan volumes.

Place outlet dampers in the full open position.

Prepare schematic diagrams of system "as-built" ductwork layouts to facilitate reporting.

Lubricate all motors and bearings.

Check fan belt tension.

Check fan rotation.

Hydronic Systems: Before operating perform these steps:

Open valves to full open position.

Remove and clean all strainers.

Blow-down strainers on self balance valves.

Check pump rotation.

Clean and set automatic fill valves or glycol fill tanks for required system pressure.

Check that the system is completely full of water or glycol.

Check air vents at high points of systems and determine if all are installed and operating freely (automatic type) or to bleed air completely (manual type).

Set temperature controls so all coils are calling for full flow.

Lubricate all motors and bearings.

Testing, Adjusting and Balancing: Perform testing and balancing procedures on each system identified, in accordance with the detailed procedures outlined in the referenced standards.

Balance air systems to within 10% of indicated air flow.

Balance hydronic systems to within 10% of indicated flow. If self balance valves are employed, measure pressure drop across each valve.

Balance air systems with dampers fully open whenever possible, then slow the fan to meet design conditions.

Test and adjust mechanical systems for sound and vibration in accordance with the detailed instructions of the referenced standards.

Cut insulation, ductwork, and piping for installation of test probes to the minimum extent necessary to allow adequate performance of procedures.

Patch insulation, ductwork, and housings, using materials identical to those removed.

Seal ducts and piping, and test for and repair leaks.
Seal insulation to re-establish integrity of the vapor barrier.

Mark equipment settings, including damper control positions, valve indicators, fan speed control levers, and similar controls and devices, to show final settings. Mark with paint or other suitable, permanent identification materials.

Score all damper shafts at end to indicate damper position. Applicable for all dampers in all equipment.

Pulleys, Belts and Sheaves: Make any changes in the pulleys, belts and sheaves as required for correct balance as part of this Contract, and at no additional cost to the Owner.

Retesting: Retest, adjust, and balance systems subsequent to significant system modifications, and resubmit test results.

Field Adjustment of Flow Rates: The hydronic and air flow rates noted in the construction documents are design goals. The balancing contractor should attempt to balance the systems to achieve these flow rates where possible. If not possible, the balancing contractor should consult with the Design Engineer to determine appropriate adjustments to the system flow rates.

END OF SECTION 231990 (4/25/16)

BALANCING SCHEDULE
Greenfield School Administration Office Project - Greenfield, MA

SCOPE OF WORK

Allow for preliminary and final balance reports.

Submit complete preliminary balance report prior to engineer's final inspection.

Rebalance and submit final balance report after corrective measures have been taken.

Balance all hydronic and air systems.

Adjust vanes at all diffusers and grilles as indicated or as required for proper air distribution and to avoid direct blow on occupants.

Verify HVAC system cleanliness.

DAMPER TESTING

Check each damper to confirm that it opens and closes and seals tightly as intended.

AIR SYSTEMS

Balance all air systems to CFM's notes on plans.

SECTION 26.00.00 – ELECTRICAL

PART 1 - GENERAL

1.1 FILED SUB-BID REQUIRED

A. Sub-bids for work under this Section shall be for the complete work and shall be filed in a sealed envelope with the Awarding Authority at a time and place as stipulated in the "ADVERTISEMENT FOR BID". The following shall appear on the upper left hand corner of the envelope:

NAME OF SUB-BIDDER: _____
PROJECT: _____
SUB-BID FOR SECTION: _____
(No. and Title of Section)

B. Each Sub-Bid submitted for work under this Section shall be on forms furnished herein, as required by Section 44F of Chapter 149 of the General Laws, as amended.

C. Sub-Bids filed with the Awarding Authority shall be accompanied by a BID BOND, CASH, CHECK, or a TREASURER'S or CASHIER'S CHECK issued by a responsible bank or trust company payable to the CITY OF GREENFIELD in the amount of five percent of the bid. A Sub-Bid accompanied by any other form of bid deposit than those specified will be rejected.

1.2 GENERAL REQUIREMENTS

A. Work shall be inclusive but not limited to the removal of the existing electrical systems within the first floor selective classroom areas. Installation of a new lighting, power, fire alarm and mechanical systems to support the renovated areas.

B. Submit a list of all Subcontractors as part of the base bid.

C. The Owner reserves the right to request references from this contractor and the right of final selection of the contractor.

1.3 RELATED DOCUMENTS

A. Drawings and general provisions of Contract, including General and Supplementary Conditions and Division 1 Specification Sections, are hereby made a part of this Section.

1.4 REFERENCES

A. The GENERAL DOCUMENTS, as listed in the Table of Contents, and applicable parts of Division 1, GENERAL REQUIREMENTS, are hereby made a part of this Section.

B. Examine all Drawings and all other Sections of the Specifications for requirements therein affecting the work of this Trade.

1.5 SCOPE

A. Labor, supervision, materials, tools, scaffolding, equipment, supplies, transportation and

services for a complete and operational electrical system as specified shall be provided.

B. Materials and equipment shall be installed in accordance with standards of the National Electrical Code, local codes, safety codes and ordinances.

C. Work under this Section shall include, but not be limited to:

PART I – GENERAL
1.1 GENERAL REQUIREMENTS
1.2 RELATED DOCUMENTS
1.3 REFERENCES
1.4 SCOPE
1.5 EXAMINATION OF SITE
1.6 DRAWINGS AND SPECIFICATIONS
1.7 INSURANCE
1.8 CHANGES AND REVISIONS
1.9 WORKMANSHIP
1.10 MANUFACTURERS' NAMES AND TRADE NAMES
1.11 MATERIAL STORAGE AND OFFICE SPACE
1.12 GUARANTEE
1.13 RELATED WORK
1.14 CUTTING AND PATCHING
1.15 OPERATING INSTRUCTIONS
1.16 PERMITS
1.17 RECORD DRAWINGS
1.18 TEMPORARY LIGHT AND POWER
1.19 DEFINITIONS
1.20 PRODUCT DELIVERY, STORAGE AND HANDLING
1.21 WORK CONDITIONS/SEQUENCE

PART 2 - PRODUCTS
2.1 RACEWAYS AND FITTINGS
2.2 FIRE PROOFING AND CONDUIT SEAL
2.3 WIRING SYSTEM
2.4 WIRE
2.5 GROUNDING
2.6 OUTLET BOXES
2.7 PULL AND JUNCTION BOXES
2.8 SLEEVES
2.9 WIRING DEVICES
2.10 SYSTEM OF LIGHT AND POWER
2.11 LIGHTING SYSTEM
2.12 FIRE ALARM SYSTEM
2.13 COMMUNICATIONS

PART 3 – EXECUTION
3.1 INSPECTION AND COORDINATION
3.2 INSTALLATION
3.3 RACEWAYS AND FITTINGS
3.4 WIRE
3.5 GROUNDING
3.6 OUTLET BOXES
3.7 WIRING DEVICES
3.8 LOCATION OF OUTLETS
3.9 HANGERS AND SUPPORTS
3.10 INSTRUCTIONS TO OWNER

3.11 CLEANUP
3.12 FIRESTOPPING

1.5 EXAMINATION OF SITE

A. Before submitting a Bid, this Contractor must visit the job site to determine the conditions under which the work is to be done.

1.6 DRAWINGS AND SPECIFICATIONS

A. Drawings and specifications are complementary to each other. Any labor and material which is called for by either, whether or not by both, or which is necessary for the successful operation of all systems, shall be furnished and installed. Discrepancies should be brought immediately to the attention of the Architect.

B. Plans and specifications for this project should be examined to determine the scope and character of the work, the building design and function, and the required coordination with the General Contractor and other Trades before and during construction.

C. Any questions regarding the plans and specifications shall be addressed in writing to the Architect five (5) days before Bids close; otherwise, after the closing of the Bids, the Architect's interpretation of the meaning and intent of the plans and specifications shall be final.

D. This Contractor shall prepare an electrical set of coordination drawings to overlay with all other Trades. Drawings shall be prepared on translucent drawings to properly coordinate all of the other equipment to be installed. Prior to any installations, the Electrical Contractor must receive approval of drawings from the Architect.

1.7 INSURANCE

A. Insurance is to conform to the provisions and requirements as set forth in Division 1.

1.8 CHANGES AND REVISIONS

A. Costs for changes and/or revisions shall be submitted to the General Contractor with material and labor breakdown of charges and credits clearly itemized.

B. Work shall not be executed until approval has been received in writing from the Architect.

1.9 WORKMANSHIP

A. Materials shall be new and shall conform to the standards of UL, Inc., in every case where such a standard has been established for the particular type of material in question. Work shall be executed in a workmanlike manner and a competent Foreman shall be provided for the entire project.

B. After wires are pulled in and fixtures and equipment are installed, this Contractor shall make tests for performance, grounds, etc., and shall immediately remedy any defects. Equipment for tests shall be provided by this Contractor.

C. Work under this Contract must be so performed that the progress of the entire project, including work of all Trades, shall not cause delays or interference. Materials and apparatus shall be installed as fast as the condition of the building will permit.

D. It will be the responsibility of the Electrical Foreman to instruct the Owner in the function, operation and maintenance of electrical systems and equipment. This is to be done upon completion of the installation, before leaving the job site and to the satisfaction of the Owner, Engineer, and Architect.

1.10 MANUFACTURERS' NAMES AND TRADE NAMES

A. Throughout the specification types of materials may be specified by manufacturer's name and catalogue number in order to establish standards of performance and quality, and not to limit competition.

1.11 MATERIAL STORAGE AND OFFICE SPACE

A. This Contractor shall maintain at his own expense, where directed on the premises, neat covered storage for material and equipment, and office space where drawings and specifications shall be kept for records.

B. Equipment or material damaged during the construction period shall be replaced at this Contractor's expense.

1.12 GUARANTEE

A. Materials and labor incorporated in the work are to be guaranteed against defects for a period of one (1) year from date of substantial completion. This Contractor shall correct such defects that occur within the guarantee period and to the satisfaction of the Architect without cost to the Owner, within a twenty-four (24) hour period.

B. This Contractor shall not be responsible for failures through normal usage, nor for those caused by neglect or abuse on the part of the Owner or his employees.

1.13 RELATED WORK

A. Following related work is not included in this Section and will be performed under designated Sections.

1. Major cutting and patching.

2. Fire stopping of all penetrations in rated walls and ceilings: see FIRESTOPPING Section for acceptable material to be used on the exterior of the sleeve and around wires to be used by this Contractor. The Electrical Contractor shall be responsible for all firestopping of the interior and exterior of raceways installed through walls and floors.

1.14 CUTTING AND PATCHING

A. This Contractor as part of his work, and without extra charge, shall do fitting and minor cutting required for conduit four (4) inches and under. Cutting over four (4) inches and patching will be by the General Contractor. Costs for openings required due to lack of coordination shall be the responsibility of this Contractor.

1.15 OPERATING INSTRUCTIONS

A. This Contractor shall furnish four (4) Operating and Maintenance Manuals outlining in detail the operational features of the following systems:

1. Light Fixtures.

2. Cable and metal raceway system.
3. Wiring devices and cover plates.
4. Fire alarm system - existing.

1.16 PERMITS

A. This Contractor shall obtain and pay for permits for the electrical systems on this project.

1.17 RECORD DRAWINGS

A. A set of record drawings shall be maintained at the job site for reference by the Engineer and Architect. Weekly, the Electrical Foreman will note changes and review drawings periodically with the Engineer. Changes, including feeders, lighting, power, panel schedules and other schedules shall be recorded on the drawings. At the conclusion of the construction this Contractor shall order from the General Contractor a compact disc with all drawing files. All changes shall be made on the disc and shall be compatible to that of AutoCad 2014.

1.18 TEMPORARY LIGHT AND POWER

A. This Contractor shall furnish, install, maintain and remove at completion of work all necessary temporary electrical distribution wiring.

B. Temporary service shall feed to the existing branch circuit panels currently located within the facility. Coordinate with the School Facility Department prior to connecting to existing panels.

C. Temporary light shall be based on 100W lamp for rooms up to 500 sq. ft. and two (2) 200W lamps for every 1000 sq. ft. or fraction thereof. All lamps shall be furnished and replaced by this Contractor.

D. Panelboards, switches, receptacles, poles, transformer, metering and accessories required for temporary light and power installation shall be provided.

E. Outlets shall be located at convenient points so that extension cords of not over fifty (50) feet will reach work requiring temporary light and power.

F. The General Contractor and Subcontractors, individually, shall furnish cords, sockets, motors and accessories for their work.

G. Temporary wiring, service equipment and accessories thereto installed, shall be removed at the expense of this Contractor after they have served their purpose.

H. Temporary work shall be furnished and installed in conformance with OSHA, local codes and ordinances.

I. Permanent power to lamps shall not be energized during construction (with the exception of testing) until accepted by the Architect and the Electrical Engineer as being substantial completion of work.

1.19 DEFINITIONS

A. The terms "This Contractor", "Electrical Contractor", "Electrical Subcontractor", or "This Section" all refer to the work of this Section 26.00.00.

1.20 PRODUCT DELIVERY, STORAGE, AND HANDLING

A. The General Contractor shall provide and pay for all dumpster services during the entire construction period. Suppliers and Sub-Contractors to bring all rubbish and debris to the dumpster location daily. No costs are to be assessed to the suppliers or Sub-Contractors by the General Contractor for this service.

B. The General Contractor, Sub-Contractors and suppliers, individually, shall furnish their own staging, scaffolding, and hoisting equipment to get workers, material and equipment from the point of delivery at the project site to the point of use or installation within the building and project site.

1.21 WORK CONDITIONS/SEQUENCE

A. If Sub-Contractors find that conditions are not appropriate for them to begin the work of their trade of if they are directed to perform their work out of sequence by the General Contractor, or if the General Contractor directs Sub-Contractors to start and continue regardless of job conditions, the Sub-Contractor shall notify the Architect in writing by certified mail immediately.

PART 2 - PRODUCTS

BASIC MATERIALS AND METHODS

2.1 RACEWAYS AND FITTINGS

A. Rigid conduit shall be heavy wall hot dipped, galvanized: Midland-Ross, Wheatland or Republic.

B. Minimum size of conduit used shall be 3/4" with no more than 9-#12 conductors. All circuits shall have separate neutrals and grounds.

C. Electrical Metallic Tubing (EMT) shall be mild steel, electrically welded, galvanized, Midland-Ross, Wheatland or Republic.

D. Conduit shall be kept at least six (6) inches away from adjacent copper piping or other copper work on the project.

E. During construction, ends of conduit shall be kept tightly plugged to exclude plaster, dirt, dust, moisture and debris.

F. Ends of conduit entering boxes shall be equipped with galvanized locknuts or bushings. Cut ends of conduit shall be reamed free of burrs and sharp edges.

2.2 FIREPROOFING AND CONDUIT SEAL

A. The Electrical Contractor is responsible for all fireproofing of raceways through floors and walls.

B. The material to be used for fire-stopping shall be 3M moldable fire rated putty or 3M #CP25WB caulk to fire-stop penetrations in fire rated areas of walls and floors.

2.3 WIRING SYSTEM

A. Wiring shall be installed concealed in the construction. Wiring underground or in concrete slabs shall be installed in heavy wall or rigid conduit.

B. Joints in wiring shall be made with approved type solderless connectors of the self-insulating type with an insulation equal to that of the conductors being joined. They shall be Minnesota Mining & Manufacturing Co., Type "Y", "R" or "B" Scotchlok, T&B Twist-on-Piggy or TUB one-piece,

pressure type, self-insulating wire joint.

C. All branch circuits shall have separate grounds and neutrals.

2.4 WIRE

A. Unless otherwise specified, conductors installed in conduit shall be Type THW or THHN, 600V, 90 degree C. – Rome Cable. Conductors shall be copper.

B. MC shall be Type THHN #12 copper conductors or as noted on the drawings.

C. Covering of wires and cables designed to meet the above specifications shall have distinctive markings as required by the latest standards of UL, Inc., making them readily identifiable in the field.

208Y/120V:

Phase	Color
A	Black
B	Red
C	Blue
Neutral	White
Ground	Green/Bare

2.5 GROUNDING

A. The entire system shall be grounded in accordance with the National Board of Fire Underwriters', State and local requirements.

B. Panels shall be equipped with an equipment ground connection and internal ground wire.

E. This Contractor shall furnish and install an equipment ground wire in feeder runs to meet requirements of the National Electrical Code.

F. All branch circuits shall have separate neutrals and grounds.

2.6 OUTLET BOXES

A. Outlet boxes shall be Steel City, Appleton, or Raco, galvanized of a type best adaptable to their respective use and in general four (4) square or octagon. Boxes in plaster areas shall be equipped with plaster rings or trim. Studs of suitable size for proper support shall be provided in boxes from which fixtures are to be hung.

B. Boxes installed in tile, block or similar finished walls shall be solid flush type, square cornered, without ears, 1-2-3 and 4-gang as required - Raco, Steel City or Appleton.

C. Outlet boxes shall be provided with only the holes necessary to accommodate conduit connected. Boxes shall be furnished with lugs, ears, covers and/or outlet devices for attachment.

D. Plastic boxes are NOT acceptable.

2.7 PULL AND JUNCTION BOXES

A. Pull and junction boxes shall conform to requirements of the National Electrical Code. They shall be galvanized code gauge steel construction with removable cover plate secured by 1/4" brass machine screws. Junction boxes shall be supported to the building structure.

2.8 SLEEVES

A. It shall be the responsibility of this Contractor to furnish and install sleeves through floors, walls, rated assemblies, etc., where necessary.

B. Sleeves shall be sealed with UL, Inc., approved fire rated material after wires have been installed. Refer to FIRESTOPPING Section.

2.9 WIRING DEVICES

A. Switch controls shall be Hubbell Co. #HBL1212 series-color or equal manufacturer - Leviton, General Electric, Legrand.

B. Receptacles shall be #HBL2162-color or equal manufacturer as listed above.

C. Plates in general shall be selected by the Architect.

D. Grounded type duplex receptacles shall be used. Provide ground path either by continuous metal conduit or separate conductor.

E. Flush mounted receptacles shall have ground connection from terminal screw of the receptacle to the outlet box.

F. Mounting height from center to finish floor, unless otherwise noted, shall be as follows for wiring devices:
Switches, in general .....48"
Receptacles, in general .....18"
Receptacles with X - See Architectural details for mounting height above counter.

G. All device plates for all switch controls, receptacles, etc., shall be labeled on the outside of the device plate indicating the panel designation, circuit number and voltage using a Brady style adhesive lettering tool. Hand written designations on the front face will not be acceptable.

2.10 SYSTEM OF LIGHT AND POWER

A. Secondary distribution system is 120/208V, 3 phase, 4 wire, 60 HZ AC.

2.11 LIGHTING SYSTEM

A. Provide and install the complete lighting system from the lighting outlets including wire, conduit, feeders, flexible wiring system, outlet boxes, junction boxes, wiring devices, lighting fixtures and related drivers.

B. Include labor and fittings necessary for the complete installation of fixtures. Steel rod, support wire, or chain hangers and mechanical suspension channel shall be furnished and installed. Light fixtures are to be hung to the building structure and not to the metal roof or floor decking.

C. Where recessed lighting fixtures are to be installed in plaster ceiling, plaster rings and frames shall be installed under this Section of the specification.

D. Recessed LED lighting fixtures shall be supported by wire or chain hangers by this Contractor and shall not depend on the ceiling hangers to support the weight of the fixtures

E. Unless otherwise detailed on the electrical drawings, a framed opening shall be provided under another section of the specification for recessed lighting fixtures to be installed in the ceiling.

F. LED drivers shall meet applicable ANSI Standards for harmonic distortion surge protection. All ballasts and LED drivers shall be of one manufacturer.

2.12 FIRE ALARM SYSTEM

A. The existing fire alarm equipment is Simplex-Grinnell series, addressable. The system components and related wiring will be installed to match the existing system components currently operating throughout the facility..

2.13 TELECOMMUNICATIONS SYSTEM

A. PROJECT SCOPE

A. This Contractor shall be responsible for, but not be limited to, the following telecommunication items:

a. Furnish and install two gang junction box with cover plate at the locations as shown on the plans.
b. Install a one inch empty conduit with pull string into the nearest accessible ceiling. Install a plastic grommet on the end of the conduit.
c. The owner will be responsible to furnish and install the plenum rated cable, devices, and all related terminations.

PART 3 - EXECUTION

3.1 INSPECTION AND COORDINATION

A. This Contractor shall inspect surfaces and areas that will receive his material and the job conditions as they exist, and report any conditions that may adversely affect his work. Notify Architect or General Contractor of unsuitable conditions.

B. Coordinate work with construction schedule and job progress.

C. This Contractor shall confer with the General Contractor and other Trades to coordinate his work and to properly locate systems to avoid conflict and interference.

D. Any interference with the work of other Trades or with architectural or structural details shall be brought to the attention of the Architect for decision before installation. Contractor's failure to so coordinate his work will not relieve him of the responsibility to correct work to suit building conditions.

3.2 INSTALLATION

A. Installation shall be by skilled workmen using proper equipment. Commencement of work shall be deemed as acceptance of existing conditions by installer.

B. Entire application shall be in strict accordance with manufacturer's recommendations and the standards of the National Electrical Code, local codes and ordinances, OSHA safety codes and regulations.

C. After wires are pulled in and all fixtures are installed, this Contractor shall make tests for performance, grounds, etc., and shall immediately remedy defects. Equipment for tests shall be borne by this Contractor.

D. Work under this Contract must be so performed that the progress of the entire project, including

work of all Trades shall not cause delays or interference. Material and apparatus shall be installed as fast as condition of the building will permit.

3.3 RACEWAYS AND FITTINGS

A. Conduit and wiring shall be installed concealed in the construction where possible. Conduit shall be installed in a neat, workmanlike manner and run parallel to building walls. Conduit size shall be minimum 3/4".

B. During building construction ends of conduit shall be tightly plugged to exclude plaster, dirt, dust and moisture.

C. Ends of conduit entering boxes shall be equipped with galvanized locknuts and bushings. Cut ends of conduit shall be reamed free of burrs and sharp edges.

D. Electrical metallic tubing couplings and terminations in outlet boxes, junction boxes, panelboard cabinets, etc., shall be secured thereto for grounding by means of raintight and concrete-tight fittings of the interlocking compression ring or stainless steel, multiple joint locking type. Set screws or indentations will not be acceptable as a method of attachment of fittings to conduit or EMT.

3.4 WIRE

A. Wire #8 and larger shall be stranded and no wire less than #12 shall be used, unless otherwise noted.

B. This Contractor may use MC cable with THHN conductors where allowed by code. No wiring less than #12 AWG shall be used.

C. NM Type cable shall NOT be used.

3.5 OUTLET BOXES

A. Ceiling boxes shall be supported to carry the weight of fixtures which are to be hung.

B. Boxes in poured concrete slab ceilings shall be four (4) inch concrete type as required by slab thickness with complete back plate and support.

C. Outlet boxes shall be provided with only the holes necessary to accommodate the conduits being connected. Boxes shall be furnished with lugs or ears for attachment of covers and/or outlet devices.

3.6 WIRING DEVICES

A. Grounded type duplex receptacles shall be used. Provide ground path either by continuous metal conduit or separate conductor.

B. Receptacles with X typical for above counter or special mounting height. Refer to the Architectural Drawings for these locations and details before installation.

3.7 LOCATION OF OUTLETS

A. Outlets shall line up with items above and be centered on wall. Add supports as required for this purpose. Do not mount on nearest studs.

B. Architect or Engineer has the right to move outlets a reasonable distance.

C. This Contractor shall check any questionable outlet before installation.

D. This Contractor shall review drawings for exact location of receptacles mounted above counter or for special purpose. Dimensions shall be taken from Architectural drawings not from Electrical.

3.8 HANGERS AND SUPPORTS

A. Lighting fixtures shall be hung independent of the ceiling system.

B. Recessed fixtures shall be supported from two (2) one-quarter (1/4") inch steel rod supports or chain or wire hangers having the same strength designed for the purpose.

C. Surface fixtures shall be supported from 1/4" rods.

D. Wiring above the ceiling shall be supported to conform to code.

3.9 INSTRUCTIONS TO OWNER

A. It shall be the responsibility of the Electrical Foreman to instruct the Owner in the function, operation and maintenance of electrical systems and equipment.

3.10 CLEANUP

A. Stains and/or damage to the finish of the building caused by faulty workmanship and/or improper handling of material in regard to installation shall be cleaned or removed and replaced at no cost to the Owner.

B. Panels and like shall be cleaned and left in a neat manner and where required shall be painted if any finish material has been removed.

C. Temporary wiring shall be removed.

D. Lighting fixtures shall be left clean. Lenses shall not be installed until areas are completed and free from dust and dirt.

3.11 FIRESTOPPING

A. The Electrical Contractor shall be responsible to fire stop all the raceways and the interior and exterior of all sleeves through which wires penetrate walls, floors or any other penetrations requiring firestopping material under this Section.

END OF SECTION

Greenfield School Administration Office Project

at the

Greenfield Middle School -195 Federal Street, Greenfield, MA 01301

Owner: Town of Greenfield, 14 Court Square, Greenfield MA 01301
Hon. William Martin - Mayor, Jordana B. Harper - Superintendent of Schools, Gary Tashjian - Principal, Greenfield Middle School

Owners Project Manager: P3 Inc.
150 Longwater Drive Suite 203
Norwell MA 02061
(781) 871-3136

dpallotta@p-threeinc.com

Architect: Jablonski DeVriese Architects, Inc.
29 Elliot Street
Springfield, MA 01105
(413) 747-5285

brian@jdarchitects.com

HVAC Design: Kohler & Lewis Mechanical Engineering
70 Island Street
Keen, NH 03431
(603) 352-4841

general@kohlerandlewis.com

Electrical Design: Shepherd Engineering, Inc.
1308 Grafton Street
Worcester, MA 01604
(508) 757-7793

jshepherd@shepherdengineeringinc.com

Fire Supression Design: Ryback Engineering, Inc.
132 Forest Avenue - P.O. Box 709
warren, MA 01083
(413) 436-5563

info@rybak-fpc.com

List of Drawings

T1.0 - Title Sheet
D1.1 - First Floor Demolition Plan
A1.1 - First Floor Plan
A1.2 - Reflected Ceiling Plan
A2.1 - Schedules
A2.2 - Details
A2.3 - Details
M1.1 - First Floor HVAC Plan
M1.2 - HVAC Details
E1.1 - First Floor Plan - Lighting
E1.2 - First Floot Plan - Power
E2.1 - Legends, Schedules and Details
ED.1 - Demo - First Floor Plan - Electrical
FA.1 - First Floor Plan - Fire Alarm
FP0.1 - Details and Notes - Fire Protection
FP1.1 - First Floor West - Fire Protection

T1.0

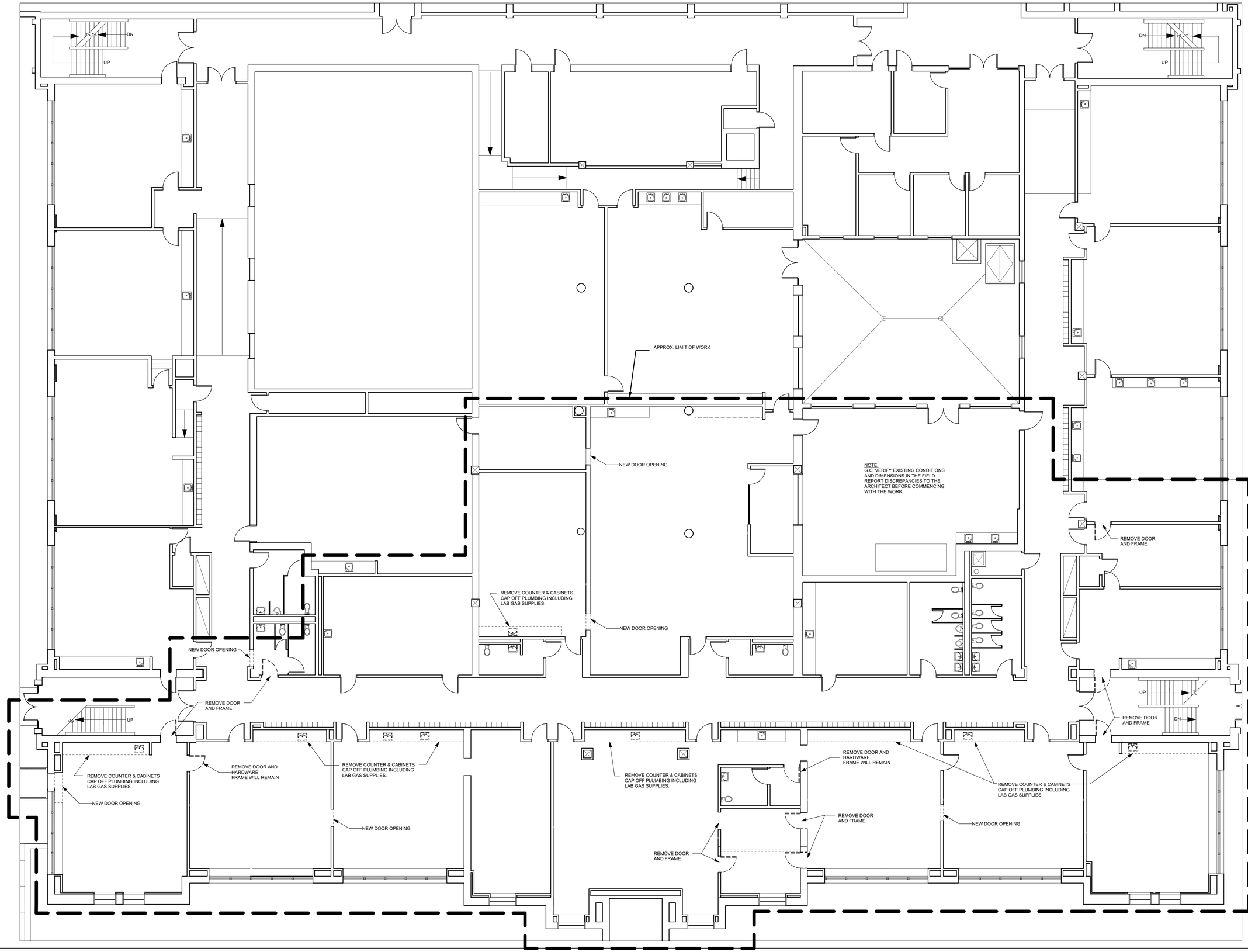

JABLONSKI | DEVRIESE
ARCHITECTS
www.jdarchitects.com

member: American Institute of Architects

29 Elliot Street | Springfield, MA 01105
T 413.747.5285

REGISTERED ARCHITECT
BRIAN M. DE VRIESE
No. 7348
HEATH
MASS.
COMMONWEALTH OF MASSACHUSETTS

Consultants

School Administration Offices
195 Federal Street
Greenfield, MA

First Floor -West
Demolition Plan

Revisions:

Date	12/18/15
File Name	Greenfield Middle School
Drawn By	
Reviewed By	
Scale	1/8" = 1'-0"

Drawing No.

D1.1

of

BID SET - 4/27/16

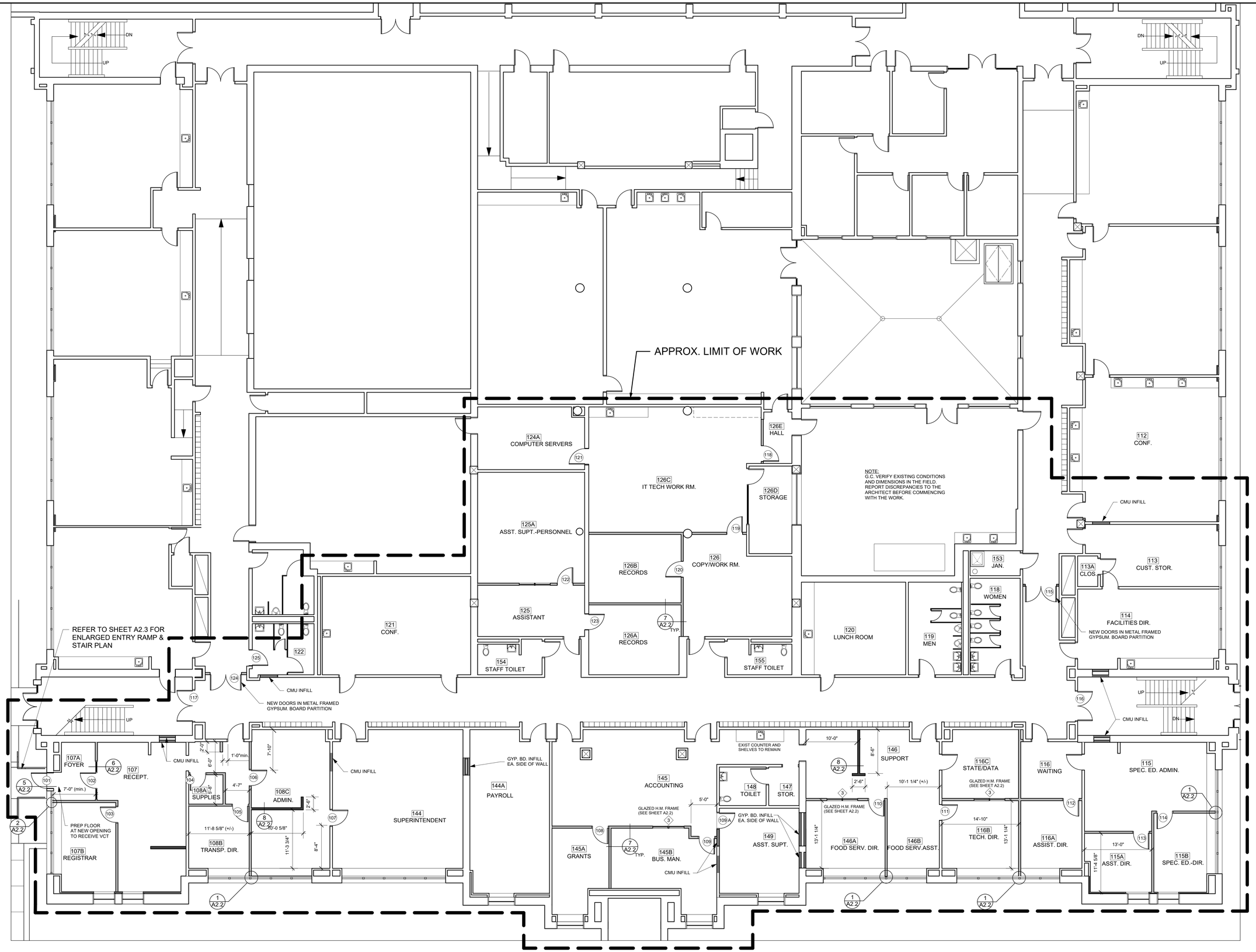

JABLONSKI | DEVRIESE
ARCHITECTS
www.jdarchitects.com

member: American Institute of Architects

29 Elliot Street | Springfield, MA 01105
T 413.747.5285

REGISTERED ARCHITECT
BRIAN M. DE VRIESE
No. 7348
HEATH
MASS.
COMMONWEALTH OF MASSACHUSETTS

Consultants

LEGEND

- EXISTING CONSTRUCTION
- NEW MTL. FRAMING & GYP. BD WALL
- INFILL WALL - MTL. FRAMING & GYP. BD OR CMU AS NOTED
- DOOR & FRAME TO BE REMOVED
- EXISTING DOOR TO REMAIN
- NEW DOOR AND FRAME

School Administration Offices
195 Federal Street
Greenfield, MA

First Floor -West

Revisions:
04/27/16 - Bid Set

Date 12/18/15
File Name Greenfield Middle School
Drawn By
Reviewed By
Scale 1/8" = 1'-0"

Drawing No.

A1.1

of

BID SET - 4/27/16

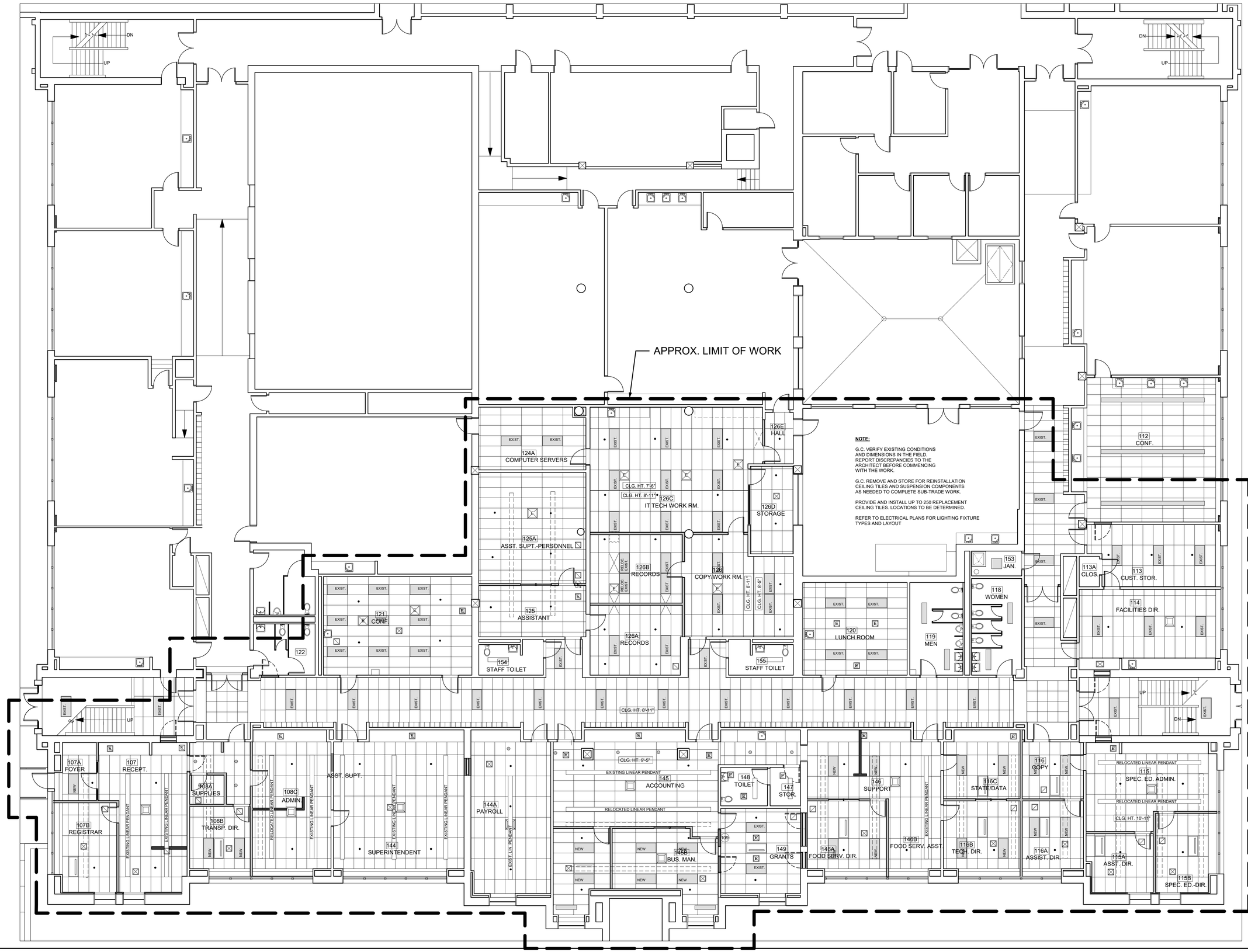

NOTE:

G.C. VERIFY EXISTING CONDITIONS AND DIMENSIONS IN THE FIELD. REPORT DISCREPANCIES TO THE ARCHITECT BEFORE COMMENCING WITH THE WORK.

G.C. REMOVE AND STORE FOR REINSTALLATION CEILING TILES AND SUSPENSION COMPONENTS AS NEEDED TO COMPLETE SUB-TRADE WORK.

PROVIDE AND INSTALL UP TO 250 REPLACEMENT CEILING TILES. LOCATIONS TO BE DETERMINED.

REFER TO ELECTRICAL PLANS FOR LIGHTING FIXTURE TYPES AND LAYOUT

JABLONSKI | DEVRIESE
ARCHITECTS
www.jdarchitects.com

member: American Institute of Architects

29 Elliot Street | Springfield, MA 01105
T 413.747.5285

REGISTERED ARCHITECT
BRIAN M. DE VRIESE
No. 7348
HEATH
MASS.
COMMONWEALTH OF MASSACHUSETTS

Consultants

School Administration Offices
195 Federal Street
Greenfield, MA

First Floor -West
Reflected Ceiling Plan

Revisions:
04/27/16 - Bid Set

Date	12/18/15
File Name	Greenfield Middle School
Drawn By	
Reviewed By	
Scale	1/8" = 1'-0"

Drawing No.

A1.2

of

BID SET - 4/27/16

DOOR SCHEDULE

Door #	Location	Width / Height / Thickness	Type	Door Material	Frame Material	Frame Type	Fire Rating	Handle Type	Lock Type	Closer Type		Remarks
101	Foyer	(1) 36"/84"/1 -3/4"		Aluminum	Aluminum		0 Hr	Panic Hardware	Electric Strike	closer	ext threshold/weather stripping	Card Reader
102	Reception	(1) 36"/84"/1 -3/4"		Aluminum	Aluminum		0 Hr	Push/Pull	No Lock	closer		
103	Registrar	(1) 36"/84"/1 -3/4"	C	Wood	Hollow metal	Type 1	0 Hr	Lever Handle	Office Lock	none		
104	Supply Clos.	(1) 36"/84"/1-3/4"	A	Wood	Hollow metal	Type 1	0 Hr	Lever Handle	Store Room Lock	none		
105	Transp. Direct.	(1) 36"/84"/1-3/4"	C	Wood	Hollow metal	Type 1	0 Hr	Lever Handle	Office Lock	none		
106	Administration	(1) 36"/84"/1 -3/4"	C	Wood	Hollow metal	Type 1	0 Hr	Lever handle	Office Lock	none		
107	Superindendent	(1) 36"/84"/1 -3/4"	C	Wood	Hollow metal	Type 1	0 Hr	Lever handle	Office Lock	none		
108	Grants	(1) 36"/84"/1 -3/4"	C	Wood	Hollow metal	Type 1	0 Hr	Lever handle	Office Lock	none		
109	Business Manager	(1) 36"/84"/1 -3/4"	C	Wood	Hollow metal	Type 1	0 Hr	Lever handle	Office Lock	none		
109	A Asst. Superint.	(1) 36"/84"/1 -3/4"	B	Wood	Hollow metal	Type 1A 6" CMU	0 Hr	Lever handle	Office Lock	none		
110	Food Service Dir.	(1) 36"/84"/1 -3/4"	C	Wood	Hollow metal	Type 1	0 Hr	Lever handle	Office Lock	none		
111	Tech. Director	(1) 36"/84"/1 -3/4"	C	Wood	Hollow metal	Type 1A 6" CMU	0 Hr	Lever handle	Office Lock	none		
112	Assist. Dir. - Spec. Ed.	(1) 36"/84"/1 -3/4"	C	Wood	Hollow metal	Type 1	0 Hr	Lever handle	Office Lock	none		
113	Assist. Dir. - Spec. Ed.	(1) 36"/84"/1 -3/4"	C	Wood	Hollow metal	Type 1	0 Hr	Lever handle	Office Lock	none		
114	Spec. Ed. Director	(1) 36"/84"/1 -3/4"	C	Wood	Hollow metal	Type 1A	0 Hr	Lever handle	Office Lock	none		
115	Hall	(2) 36"/84"/1 -3/4"	B	Wood	Hollow metal	Type 2	0 Hr	Panic Hardware	Electric Strike	closer (2)	Card Reader	
116	Stair	Existing	Existing	Existing	Existing	Existing	Existing	Panic Hardware	Electric Strike	Existing	Card Reader	
117	Stair	Existing	Existing	Existing	Existing	Existing	Existing	Panic Hardware	Electric Strike	Existing	Card Reader	
118	Hall	(1) 36"/84"/1 -3/4"	B	Wood	Hollow metal	Type 1	0 Hr	Lever handle	Office Lock	none		
119	IT Work Room	(1) 36"/84"/1 -3/4"	C	Wood	Hollow metal	Type 1	0 Hr	Lever handle	Office Lock	none		
120	Records	(1) 36"/84"/1 -3/4"	B	Wood	Hollow metal	Type 1	0 Hr	Lever handle	Store Room Lock	none		
121	Computer Servers	(1) 36"/84"/1 -3/4"	A	Wood	Hollow metal	Type 1A 8" CMU ?	0 Hr	Lever handle	Store Room Lock	none		
122	Assist. Supt. - Personnel	(1) 36"/84"/1 -3/4"	C	Wood	Hollow metal	Type 1	0 Hr	Lever handle	Office Lock	none		
123	Records	(1) 36"/84"/1 -3/4"	B	Wood	Hollow metal	Type 1A 8" CMU ?	0 Hr	Lever handle	Store Room Lock	none		
124	Hall	(2) 36"/84"/1 -3/4"	B	Wood	Hollow metal	Type 2	0 Hr	Panic Hardware	Electric Strike	closer (2)	Card Reader	
125	Girls Toilet	(1) 36"/84"/1 -3/4"	A	Wood	Hollow metal	Type 1A 6" CMU	0 Hr	Push/Pull	No Lock	closer		

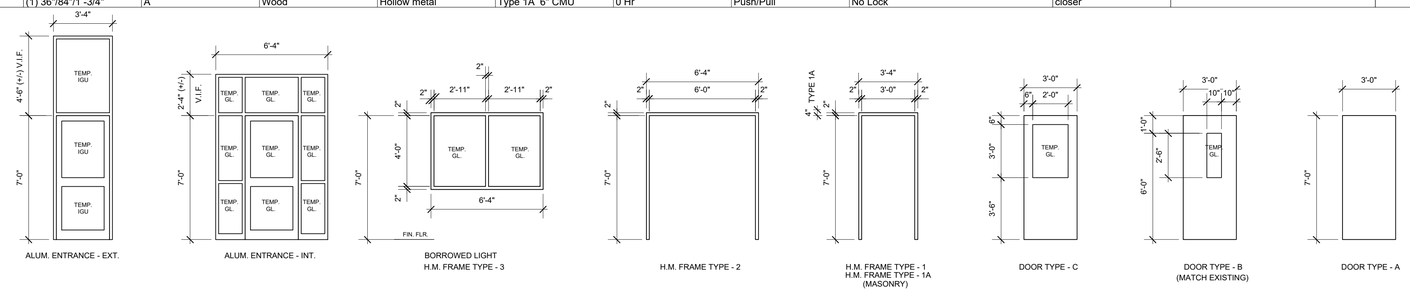

ALUM. ENTRANCE - EXT. | ALUM. ENTRANCE - INT. | BORROWED LIGHT H.M. FRAME TYPE - 3 | H.M. FRAME TYPE - 2 | H.M. FRAME TYPE - 1 H.M. FRAME TYPE - 1A (MASONRY) | DOOR TYPE - C | DOOR TYPE - B (MATCH EXISTING) | DOOR TYPE - A

2 Door & Frame Elevations
1/4" = 1'-0"

Jablonski DeVriese Architects, Inc

ROOM #	ROOM NAME	FLOOR	WALLS				CEILING	NOTES
			North	South	East	West		
107A	Foyer	New Mat over Existing	Paint Existing	New ptd. Gyp. Bd.	Paint Existing	New ptd. Gyp. Bd.	New ACT in Existing Grid	
107	Reception	Exist VCT	New ptd. Gyp. Bd.	New ptd. Gyp. Bd.	New ptd. Gyp. Bd.	Paint Existing	New ACT in Existing Grid	Paint new low partition
107B	Registrar	Exist VCT	New ptd. Gyp. Bd.	Paint Existing	New ptd. Gyp. Bd.	Paint Existing	New ACT in Existing Grid	
108	Hall	Exist VCT	Paint Existing	New ptd. Gyp. Bd.	Paint Existing	New ptd. Gyp. Bd.	Exist. ACT in Existing Grid	
108A	Supplies	Exist VCT	Paint Existing	New ptd. Gyp. Bd.	New ptd. Gyp. Bd.	New ptd. Gyp. Bd.	Exist. ACT in Existing Grid	
108B	Transp. Dir.	Exist VCT	Paint Existing	New ptd. Gyp. Bd.	New ptd. Gyp. Bd.	Paint Existing	Exist. ACT in Existing Grid	
108C	Administration	Exist VCT	New ptd. Gyp. Bd.	Paint Existing	Paint Existing	Paint Existing	Exist. ACT in Existing Grid	
144	Superintendent	Exist VCT	Paint Existing	Paint Existing	Paint Existing	Paint Existing	Exist. ACT in Existing Grid	
144A	Payroll	Exist VCT	Paint Existing	Paint Existing	Paint Existing	Paint Existing	Exist. ACT in Existing Grid	Paint new low partition
145A	Grants	Exist VCT	Paint Existing	New ptd. Gyp. Bd.	New ptd. Gyp. Bd.	Paint Existing	Exist. ACT in Existing Grid	
145	Accounting	Exist VCT	New ptd. Gyp. Bd.	New ptd. Gyp. Bd.	Paint Existing	New ptd. Gyp. Bd.	Exist. ACT in Existing Grid	
145B	Business Manager	Exist VCT	New ptd. Gyp. Bd.	Paint Existing	New ptd. Gyp. Bd.	Paint Existing	Exist. ACT in Existing Grid	
147	Storage	Exist VCT	Paint Existing	Paint Existing	Paint Existing	Paint Existing	Exist. ACT in Existing Grid	
148	Toilet	Exist VCT	Paint Existing	Paint Existing	Paint Existing	Paint Existing	Exist. ACT in Existing Grid	
149	Asst. Superintendent	Exist VCT	Paint Existing	Paint Existing	Paint Existing	Paint Existing	New ACT in New Grid	Patch & Paint infilled doors
146	Support	Exist VCT	New ptd. Gyp. Bd.	Paint Existing	Paint Existing	New ptd. Gyp. Bd.	Exist. ACT in Existing Grid	
146A	Food Service Director	Exist VCT	Paint Existing	New ptd. Gyp. Bd.	New ptd. Gyp. Bd.	Paint Existing	Exist. ACT in Existing Grid	
146B	Food Service Assistant	Exist VCT	New ptd. Gyp. Bd.	Paint Existing	New ptd. Gyp. Bd.	Paint Existing	Exist. ACT in Existing Grid	
116C	State/Data	Exist VCT	Paint Existing	New ptd. Gyp. Bd.	Paint Existing	New ptd. Gyp. Bd.	Exist. ACT in Existing Grid	
116B	Tech. Director	Exist VCT	Paint Existing	New ptd. Gyp. Bd.	New ptd. Gyp. Bd.	Paint Existing	Exist. ACT in Existing Grid	
116A	Assistant Dir.-Spec. Ed.	Exist VCT	New ptd. Gyp. Bd.	Paint Existing	New ptd. Gyp. Bd.	Paint Existing	Exist. ACT in Existing Grid	
116	Copy	Exist VCT	New ptd. Gyp. Bd.	Paint Existing	Paint Existing	New ptd. Gyp. Bd.	Exist. ACT in Existing Grid	
115	Spec. Ed. Admin	Exist VCT	Paint Existing	Paint Existing	Paint Existing	New ptd. Gyp. Bd.	Exist. ACT in Existing Grid	
115A	Assistant Dir.-Spec. Ed.	Exist VCT	Paint Existing	New ptd. Gyp. Bd.	New ptd. Gyp. Bd.	Paint Existing	Exist. ACT in Existing Grid	
115B	Director-Spec. Ed.	Exist VCT	New ptd. Gyp. Bd.	Paint Existing	New ptd. Gyp. Bd.	Paint Existing	Exist. ACT in Existing Grid	
114	Facilities Director	Exist VCT	Paint Existing	Paint Existing	Paint Existing	Paint Existing	Exist. ACT in Existing Grid	
113	Custodian Storage	Exist VCT	Exist. to remain	Exist. to remain	Exist. to remain	Exist. to remain	Exist. ACT in Existing Grid	
112	Classroom	Exist VCT-Add base @ new CMU infill	Exist. to remain	Exist. to remain	Exist. to remain	Exist. to remain	Exist. ACT in Existing Grid	Patch & Paint infilled doors
153	Janitor	Exist. to remain	Exist. to remain	Exist. to remain	Exist. to remain	Exist. to remain	Exist. to remain	
118	Women	Exist. to remain	Exist. to remain	Exist. to remain	Exist. to remain	Exist. to remain	Exist. to remain	
119	Men	Exist. to remain	Exist. to remain	Exist. to remain	Exist. to remain	Exist. to remain	Exist. to remain	
120	Lunch Room	Exist VCT	Paint Existing	Paint Existing	Paint Existing	Paint Existing	Exist. ACT in Existing Grid	
155	Staff Toilet	Exist. to remain	Paint Existing	Paint Existing	Paint Existing	Paint Existing	Exist. to remain	
126	Copy/Work Room	Exist VCT	New ptd. Gyp. Bd.	Paint Existing	Paint Existing & New Gyp. Bd.	Paint Existing	Exist. ACT in Existing Grid	
126A	Records	Exist VCT	Paint Existing	Paint Existing & New Gyp. Bd.	New ptd. Gyp. Bd.	New ptd. Gyp. Bd.	Exist. ACT in Existing Grid	
126B	Records	Exist VCT	Paint Existing	New ptd. Gyp. Bd.	New ptd. Gyp. Bd.	New ptd. Gyp. Bd.	Exist. ACT in Existing Grid	
126C	IT Tech Work Room	Exist VCT	Paint Existing	Paint Existing & New Gyp. Bd.	Paint Existing & New Gyp. Bd.	New ptd. Gyp. Bd.	Exist. ACT in Existing Grid	
126D	Storage	Exist VCT	Paint Existing	Paint Existing	Paint Existing	Paint Existing	Exist. ACT in Existing Grid	
126E	Hall	Exist VCT	Paint Existing & New Gyp. Bd.	Paint Existing	Paint Existing	Paint Existing	Exist. ACT in Existing Grid	
154	Staff Toilet	Exist. to remain	Paint Existing	Paint Existing	Paint Existing	Paint Existing	Exist. to remain	
125	Assistant	Exist VCT	Paint Existing	Paint Existing	New ptd. Gyp. Bd.	Paint Existing	Exist. ACT in Existing Grid	
125A	Assistant Supt. - Personnel	Exist VCT	Paint Existing	Paint Existing	Paint Existing	New ptd. Gyp. Bd.	Exist. ACT in Existing Grid	
124A	Computer Servers	Exist. to remain	Exist. to remain	Exist. to remain	Exist. to remain	Exist. to remain	Exist. to remain	
121	Conference	Exist VCT	Paint Existing	Paint Existing	Paint Existing	Paint Existing	Exist. ACT in Existing Grid	
122	Girls Toilet	Exist. to remain	Paint Existing	Exist. to remain	Exist. to remain	Paint Existing		

LEGEND: Ex. = Existing | VCT = Vinyl Composition Tile
Gyp. Bd. = Gypsum Board | ACT = Acoustical Ceiling Tile
Ptd. = Painted | VCT = Vinyl Composition Tile
Insul. = Insulation

JABLONSKI | DEVRIESE
ARCHITECTS
www.jdarchitects.com

member: American Institute of Architects

29 Elliot Street | Springfield, MA 01105
T 413.747.5285

REGISTERED ARCHITECT BRIAN M. DE VRIESE No. 7348 HEATH MASS. COMMONWEALTH OF MASSACHUSETTS

Consultants

School Administration Offices
195 Federal Street
Greenfield, MA

Schedules

Revisions:
04/27/16 Bid Set

Date 12/18/15
File Name Greenfield Middle School
Drawn By
Reviewed By
Scale None

Drawing No.

A2.1

of

BID SET - 4/27/16

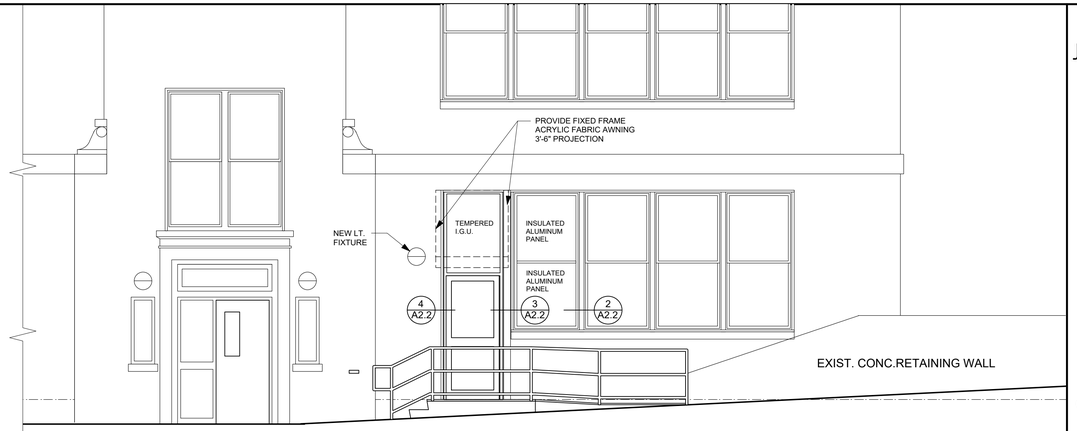

9 Elevation -New Entrance
1/4" = 1'-0"

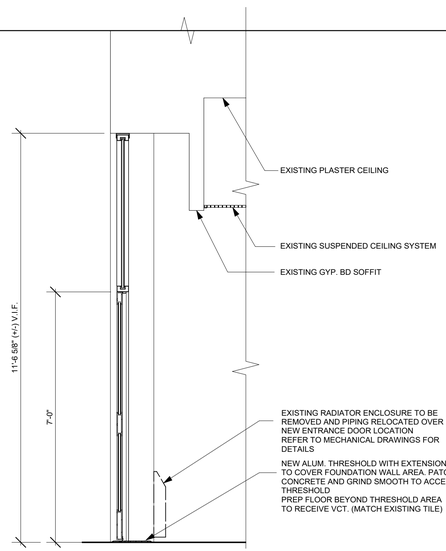

5 Section - Alum. Entrance - Ext. Door
1/2" = 1'-0"

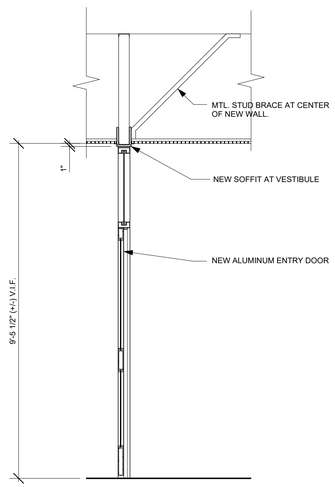

6 Section - Alum. Entrance - Int. Door
1/2" = 1'-0"

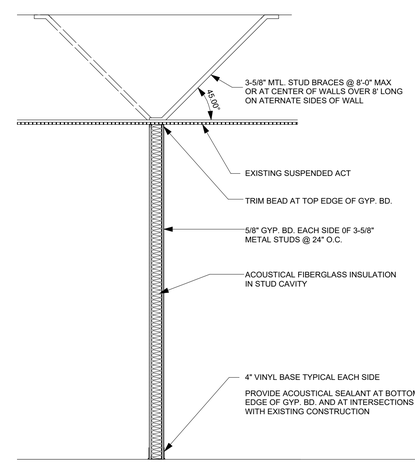

7 Section -Typical Office Partition
1/2" = 1'-0"

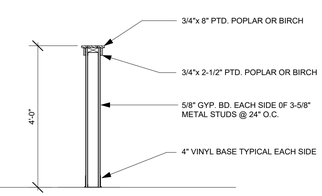

8 Section - Low Partition
1/2" = 1'-0"

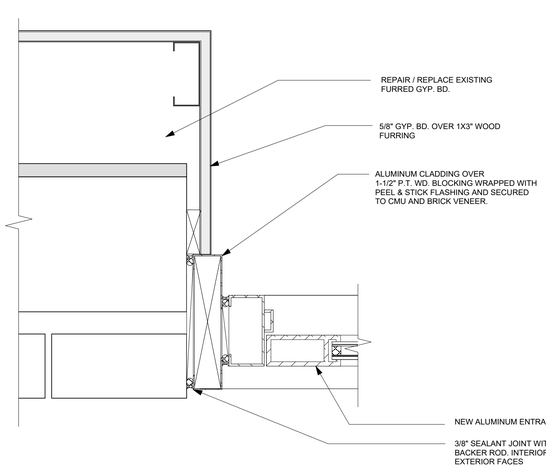

4 Door Jamb Detail
3" = 1'-0"

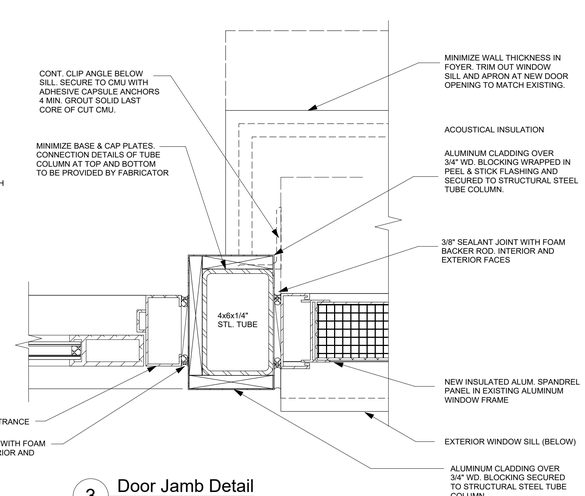

3 Door Jamb Detail
3" = 1'-0"

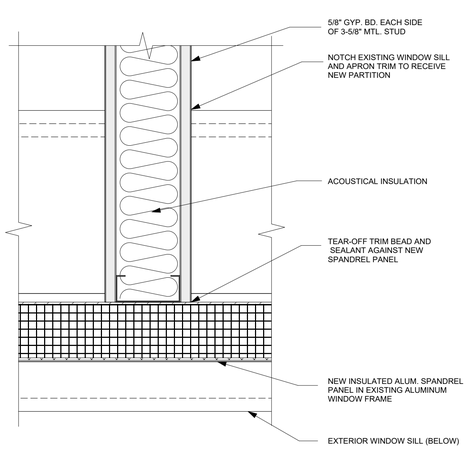

2 Wall Detail at Panel
3" = 1'-0"

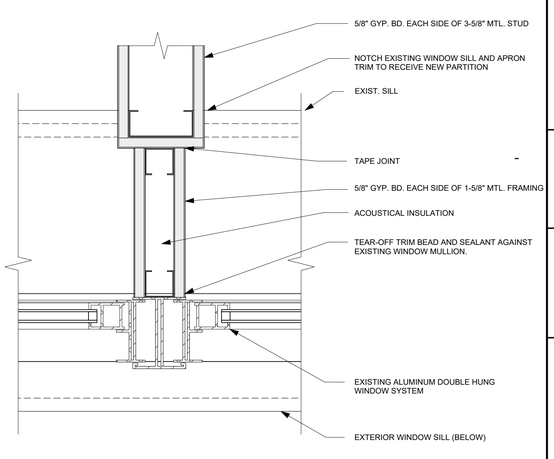

1 Mullion/Wall Detail
3" = 1'-0"

JABLONSKI | DEVRIESE
ARCHITECTS
www.jdarchitects.com

member: American Institute of Architects

29 Elliot Street | Springfield, MA 01105
T 413.747.5285

REGISTERED ARCHITECT
BRIAN M. DE VRIESE
No. 7348
HEATH
MASS.
COMMONWEALTH OF MASSACHUSETTS

Consultants

School Administration Offices
195 Federal Street
Greenfield, MA

Details

Revisions:
04/27/16 Bid Set

Date 12/18/15
File Name Greenfield Middle School
Drawn By
Reviewed By
Scale As Noted

Drawing No.

A2.2

of

BID SET - 4/27/16

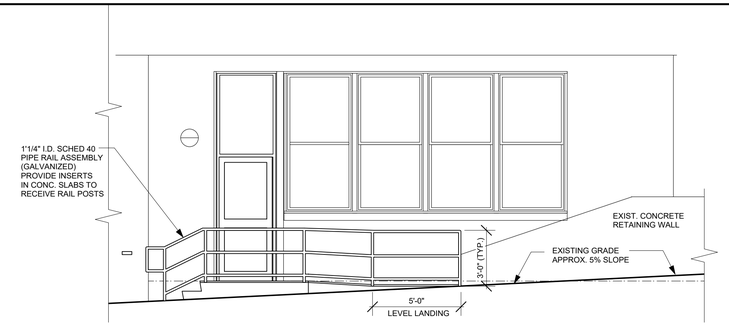

3 Elevation -New Ramp & Stair
1/4" = 1'-0"

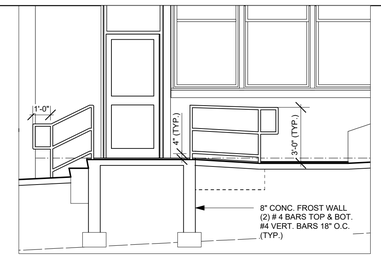

2 Section Through Ramp & Stair
1/4" = 1'-0"

NOTE:
CONTRACTOR TO VERIFY EXISTING GRADES AND DIMENSIONS.
REPORT DISCREPANCIES TO THE ARCHITECT BEFORE COMMENCING WITH CONSTRUCTION
PROVIDE SHOP DRAWINGS OF RAILING ASSEMBLIES TO ARCHITECT FOR REVIEW
ALL WELDS TO BE GROUND SMOOTH. FINISH TO BE PAINT OVER GALVANIZED STEEL
RAMP AND LANDING SURFACES TO BE BROOM FINISHED.
ALL EXPOSED VERTICAL CONCRETE SURFACES TO BE ARCHITECTURAL FINISH QUALITY
ALL FORM TIE PLUGS TO BE REMOVED AND HOLES PATCHED AND GROUND SMOOTH.
RIDGES TO BE REMOVED AND GROUND SMOOTH. PATCH ANY VOIDS ON THE EXPOSED
SURFACES AND GRIND SMOOTH.
ALL REINFORCING BARS TO BE EPOXY COATED.
CORNERS TO BE 24" x 24" MIN. LAP "L-BAR" TIED TO HORIZOTAL REINFORCING.

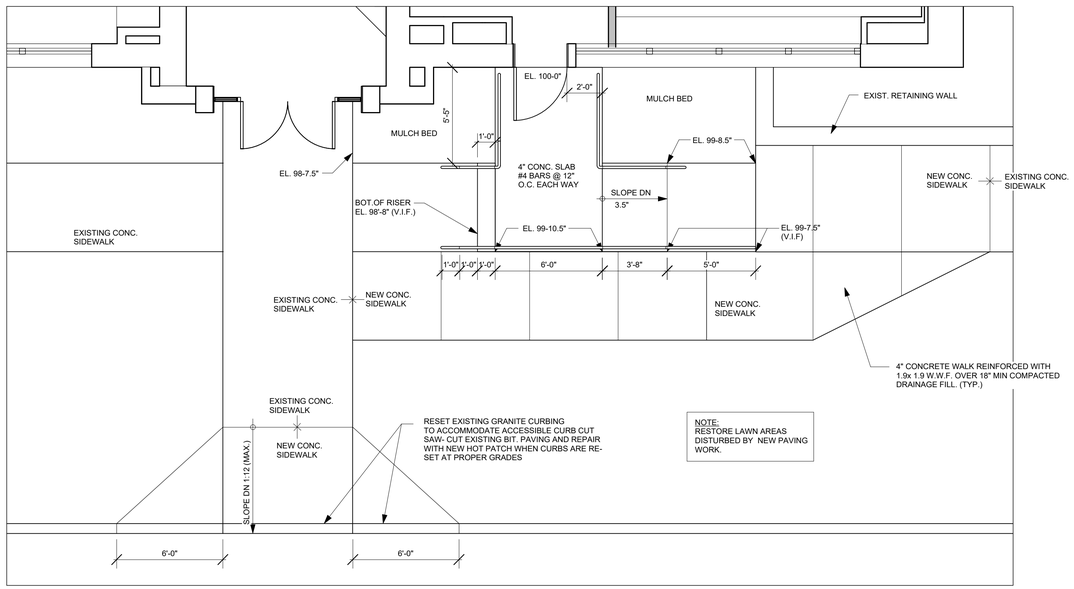

1 Plan -New Entrance Ramp andStair
1/4" = 1'-0"

JABLONSKI | DEVRIESE
ARCHITECTS
www.jdarchitects.com

member: American Institute of Architects

29 Elliot Street | Springfield, MA 01105
T 413.747.5285

REGISTERED ARCHITECT
BRIAN M. DE VRIESE
No. 7348
HEATH
MASS.
COMMONWEALTH OF MASSACHUSETTS

Consultants

School Administration Offices
195 Federal Street
Greenfield, MA

Details

Revisions:
04/27/16 Bid Set

Date 12/18/15
File Name Greenfield Middle School
Drawn By
Reviewed By
Scale None

Drawing No.

A2.3

of

BID SET - 4/27/16

CEILING RETURN/EXHAUST GRILLES SIZING TABLE	
CFM	SIZE
0–60	6x6
61–150	8x8
151–275	10x10
276–375	12x12
376–500	14x14

DIFFUSER AND REGISTER SIZE TABLE	
CFM	SIZE
0–60	6x6
61–100	6x6
101–200	12x12

DUCT RUNOUT SIZES (UNLESS OTHERWISE NOTED)	
CFM	SIZE
0–30	4"ø
31–60	5"ø
61–100	6"ø
101–150	7"ø
151–200	8"ø
201–275	9"ø
276–375	10"ø
376–600	12"ø
601–900	14"ø
901–1300	16"ø
1301–1800	18"ø
1801–2400	20"ø

RECTANGULAR DUCTWORK EQUIVALENT TO THE ROUND DUCTWORK SHOWN MAY BE SUBSTITUTED.

PROVIDE REFRIGERATION PIPING FROM EACH CONDENSING UNIT TO ITS RESPECTIVE INDOOR UNIT. REFRIGERATION PIPING SHOWN ON PLANS IS SCHEMATIC ONLY. FACTORY TECHNICAL SERVICE REPRESENTATIVE SHALL SIZE & DESIGN REFRIGERATION PIPING. TYPICAL THROUGHOUT.

RIGID BRAZED TYPE 'ACR' COPPER SHALL BE USED FOR ALL EXPOSED PIPING AND ACCESSIBLE PIPING. FOR EXPOSED PIPING TAKE CARE TO RUN PIPING IN STRAIGHT, PARALLEL LINES TIGHT TO STRUCTURE. EACH REFRIGERANT LINE SHOWN REPRESENTS TWO PIPES. TYPICAL.

SOFT TYPE 'ACR' COPPER PIPE SHALL BE USED IN INACCESSIBLE LOCATIONS SUCH AS CLOSED WALLS OR CEILINGS. DO NOT LOCATE JOINTS IN CONCEALED LOCATIONS. SOFT COPPER MAY ALSO BE USED FOR RUNOUTS IN CONCEALED LOCATIONS. EACH REFRIGERANT LINE SHOWN REPRESENTS TWO PIPES. TYPICAL.

CFM DESIGNATION FOR EXISTING DIFFUSERS OR GRILLES

(XXX) INDICATES EXISTING CFM
XXX NEW CFM

ALL NEW FTR SHOWN IS FTR 1

ALL NEW FTR PIPE SIZES ARE 3/4", AND FLOW RATES ARE 0.1 GPM PER FOOT OF ELEMENT. TYPICAL UNLESS SHOWN OTHERWISE.

FTR CONTROL VALVE LOCATION

IS AT CONTRACTOR'S OPTION, EITHER ABOVE CEILING OR WITHIN FTR ENCLOSURE. RELOCATE EXISTING VALVES AS REQUIRED BY NEW PIPING

CONTRACTOR TO CONFIRM PROPER OPERATION OF HRU GAS HEATERS – SEE SPECIFICATIONS FOR CONTROL MODIFICATIONS.

(XXX) EXISTING CFM
XXX NEW CFM, TYP.

R–1 RETURN/EXHAUST REGISTER– SEE TABLE FOR SIZE, TYPICAL.

S–1 SUPPLY DIFFUSER – SEE TABLE FOR SIZE, TYPICAL.

COORDINATE ALL HEAT PUMP AND CEILING REGISTER/GRILLE LOCATIONS WITH ARCHITECT. SUBMIT COORDINATION SHOP DRAWING.

HRU–3 ABOVE (ORIGINAL 9600 CFM SUPPLY, 9000 CFM EXHAUST.) REBALANCE SUPPLY & EXHAUST AS REQUIRED BY NEW AIR TERMINAL DESIGN CFM LEVELS

IN ROOMS WITH FTR AND HEAT PUMP AIR CONDITIONERS, THE (T) SYMBOL DESIGNATES TWO ROOM THERMOSTATS SIDE BY SIDE, FOR HEATING VS. COOLING.

SEE CIVIL DRAWINGS FOR PAD

LOCATE UNITS SO THAT WATER FROM ROOF EDGE DOES NOT FALL ON THEM

COORDINATE REFRIGERANT PIPING EXTERIOR LOCATION AND BUILDING ENTRANCE WITH ARCHITECT AND OWNER

NOTE: NO VENTILATION IN THIS ROOM

REFRIGERANT PIPING UP TO CEILING. PIPE GUARD BY ARCHITECT.

AHU–7 ABOVE (15,100 CFM) REBALANCE TO 14,285 CFM SUPPLY AIR, AND 14,085 RETURN AIR.

HEAT PUMP CENTRAL CONTROLLER

PROVIDE HEAT PUMP CONDENSATE DRAIN PIPING FROM EACH INDOOR UNIT TO MOP BASIN OR, AT CONTRACTOR'S OPTION, OUTSIDE TO GRADE AT LOCATIONS APPROVED BY ARCHITECT. CONNECT TO CONDENSATE PUMPS ON UNITS AND PIPE UP TO GRAVITY DRAIN LINES ABOVE CEILING. SEE SPECIFICATIONS FOR SIZING. PIPE ROUTING IS BY CONTRACTOR.

PROVIDE REFRIGERANT PIPING (MULTIPLE PIPES) TO EACH INDOOR UNIT PER FACTORY PIPING DIAGRAM

HRU–4 ABOVE (ORIGINAL 10,250 CFM SUPPLY, 9050 CFM EXHAUST). REBALANCE SUPPLY & EXHAUST AS REQUIRED BY NEW AIR TERMINAL DESIGN CFM LEVELS

HEAT PUMP INDOOR UNIT, FLUSH WITH CEILING, TYPICAL

FEET OF FINNED TUBE RADIATION ELEMENT, TYPICAL

PROVIDE 2 FT BY 2 FT READY ACCESS AREA FOR "c" HEAT PUMPS ON THE SIDE OF THE PIPING CONNECTIONS, TYPICAL.

DEMO EXISTING FINNED–TUBE RADIATION WHERE NEW FINNED TUBE RADIATION IS SHOWN. TURN OVER TO OWNER. SEE EXISTING DRAWING M–2.2

NEW PIPING IN EXISTING WALL OR CHASE, OR NEW PIPE CHASE, COORDINATE WITH ARCHITECT, TYPICAL

DOUBLE TIER ELEMENT 1.0 GPM

PROVIDE A 2 FT PIGTAIL OF CONTROL AND POWER WIRING AT EVERY HP–N SERIES UNIT INSTALLED IN A SOFFIT SUCH THAT UNIT CONTROL BOX CAN BE LOWERED FROM CEILING FOR SERVICE.

PROVIDE 1–FT. READY ACCESS AREA FOR "N" HEAT PUMPS ON BOTH NARROW ENDS OF UNIT, TYPICAL.

MANUAL VOLUME DAMPER FOR EACH NEW DIFFUSER & GRILLE AND EACH EXISTING ONE WHERE A NEW BRANCH IS ADDED. PROVIDE READY ACCESS. TYPICAL

KEYED NOTES

- A EXTEND SUPPLY & RETURN PIPING TO NEW VAV BOXES, 3/4" TO EACH BOX, WITH BALANCE VALVE
- B RELOCATE EXISTING RETURN GRILLES TO HAVE ONE IN EACH ROOM AS SHOWN, AND BALANCE AS SHOWN. ADD VD'S.
- C RELOCATE EXISTING SUPPLY DIFFUSER TO CENTER OF ROOM
- D RELOCATE EXHAUST GRILLE TO ROOM 126 ABOVE COPIER. BALANCE.
- E REMOVE AND TURN OVER TO OWNER. FOR VAV BOX, REPLACE WITH MATCHING DUCTWORK, AND EXTEND PIPING AS INDICATED.
- F OR 305 IF COPIER EXHAUST FAN IS RUNNING AT 75 CFM.
- G REPLACE GAS VALVE WITH NEW MODULATING GAS VALVE AND RESET SETPOINT FROM RETURN AIR TEMPERATURE.
- H NEW ROOM TEMPERATURE SENSOR REPLACES EXISTING – USE OF EXISTING WIRING IS PERMITTED.
- J BOTH SUPPLY AND RETURN CONNECTIONS THIS END. RETURN PIPE (NOT SHOWN) WITHIN ENCLOSURE WHEN SUPPLY & RETURN ARE AT THE SAME END. TYPICAL.
- K LOCATE EXHAUST GRILLE NEAR COPY MACHINE LOCATION.
- L CONTRACTOR TO COORDINATE THESE PLANS WITH EXISTING PLANS AND WITH EXISTING CONDITIONS, LOCATIONS AND FUNCTIONS OF REGISTERS AND GRILLES, AND DEMO ITEM NOT NEEDED OR INTEGRATE THEM INTO THE NEW DESIGN ON A DESIGN–BUILD BASIS TO ACCOMPLISH THE DESIGN AIRFLOWS. A PARTIAL LIST OF POSSIBLE DISCREPANCIES ARE INDICATED WITH THIS KEYED NOTE.
- M EXAMPLE LOCATION OF CONDENSATE DRAIN TO GRADE.

JABLONSKI | DEVRIESE
ARCHITECTS
www.jdarchitects.com

member: American Institute of Architects

29 Elliot Street | Springfield, MA 01105
T 413.747.5285

COMMONWEALTH OF MASSACHUSETTS
ROY E. SWAIN
MECHANICAL
No. 43127
REGISTERED PROFESSIONAL ENGINEER

Consultants:
Kohler and Lewis
70 Island Street
Keene, NH 03431
603-352-4841

School Administration Offices

195 Federal Street
Greenfield, MA

First Floor - HVAC Plan

Revisions:

Date: April 27, 2016
File Name: xxx
Drawn By: mb
Reviewed By: RES
Scale: 1/8" = 1'-0"

NORTH

Drawing No.

M1.1

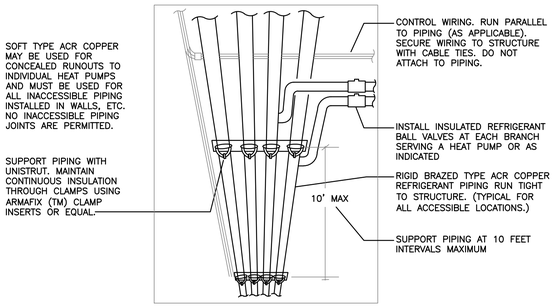

REFRIGERANT PIPING DETAIL

683–33

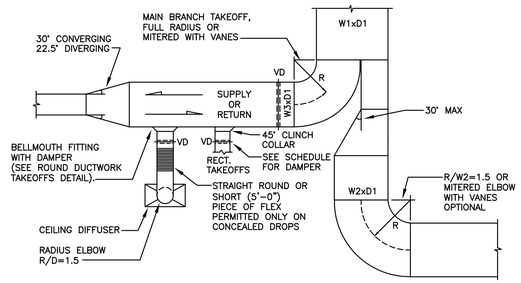

TYPICAL SUPPLY OR RETURN DUCT, RECTANGULAR

891–01

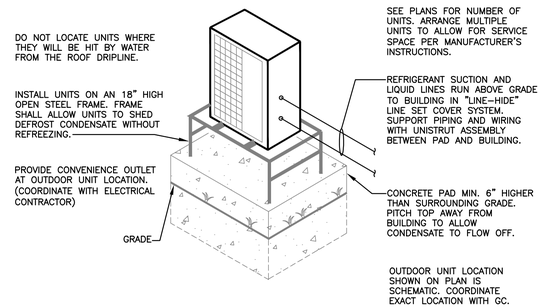

AIR–COOLED OUTDOOR UNIT – NEAR BUILDING

683–39

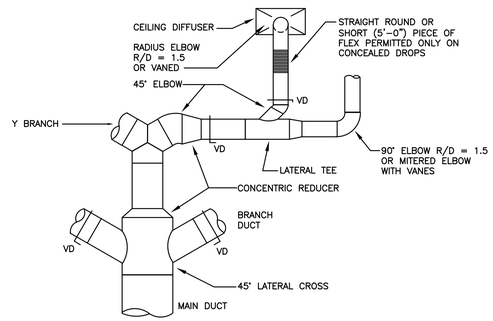

TYPICAL SUPPLY OR RETURN DUCT, ROUND

891–02

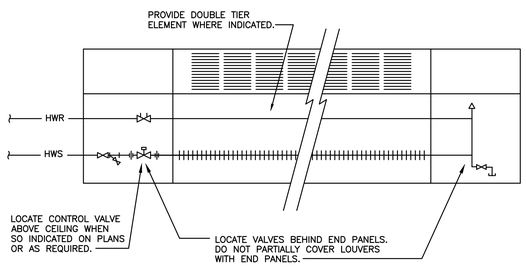

TWO PIPE FIN TUBE RADIATION DETAIL

SUPPLY & RETURN FROM SAME SIDE
PROVIDE OTHER PIPING ARRANGEMENTS AS REQUIRED

830–24

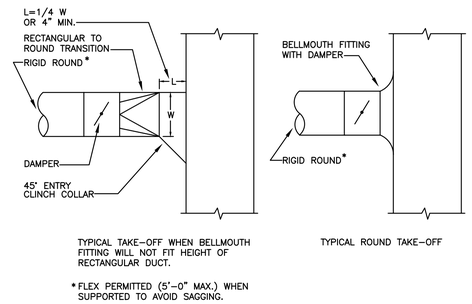

ROUND DUCTWORK TAKEOFFS

891–03

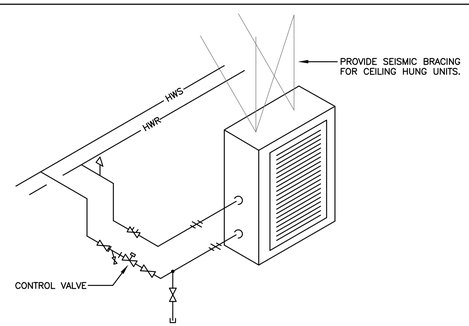

UNIT HEATER & CABINET UNIT HEATER DETAIL

830–32

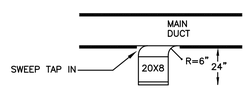

GRILLE TAKE–OFF DETAIL

891–04

LEGEND

AFF	ABOVE FINISHED FLOOR	NIC	NOT IN CONTRACT
AP	ACCESS PANEL	NC	NORMALLY CLOSED
DHW	DOMESTIC HOT WATER	NO	NORMALLY OPEN
DG	DOOR GRILLE	OAT	OUTDOOR AIR TEMPERATURE SENSOR
DTE	DOUBLE TIER ELEMENT	PC	PLUMBING CONTRACTOR
(E)	EXISTING	S	SMOKE DAMPER
EC	ELECTRICAL CONTRACTOR	TDV	TRIPLE DUTY VALVE
FC	FAN COIL	TYP	TYPICAL
GC	GENERAL CONTRACTOR	U/C	UNDERCUT DOOR (BY GC)
HC	HEATING COIL	V	VENT
MC	MECHANICAL CONTRACTOR	VTR	VENT THROUGH ROOF
MD	MOTORIZED DAMPER		

	EXISTING PIPING (TYP. FOR ALL)		THERMOMETER & DDC SENSOR (BOTH REQUIRED), TWO SEPARATE WELLS
—×—×—×—	PIPES TO BE REMOVED		UNION
—CD—	CONDENSATE DRAIN PIPING	20x12	POSITIVE PRESSURE DUCTWORK (1ST NO. IS TOP)
—HWS—	HOT WATER SUPPLY PIPING (HYDRONIC)		NEGATIVE PRESSURE DUCTWORK
- - -HWR- - -	HOT WATER RETURN PIPING (HYDRONIC)		GRADUAL DUCT TRANSITION
	CONNECT TO EXISTING	R	GRADUAL DUCT RISE
	AIR VENT	S	SUPPLY DIFFUSER BLACKED OUT QUADRANTS HAVE NO FLOW
	BALANCING VALVE	R	RETURN GRILLE
	SHUT–OFF VALVE		FIRE DAMPER AND ACCESS DOOR
	CHECK VALVE		MD–MOTORIZED DAMPER
	COMBINATION VALVE, STRAIN & DRAIN		VD–VOLUME DAMPER
	CONTROL VALVE	S	SMOKE DETECTOR
	PIPE DROPS DOWN		DDC TEMPERATURE SENSOR
	PIPE GOES UP	T	THERMOSTAT OR TEMPERATURE SENSOR
	PRESSURE REDUCING VALVE		
	PRESSURE GAUGE (PG) AND COCK		
	REDUCER		
	STRAINER		
	T&P RELIEF VALVE		

JABLONSKI | DEVRIESE
ARCHITECTS
www.jdarchitects.com

member: American Institute of Architects

29 Elliot Street | Springfield, MA 01105
T 413.747.5285

COMMONWEALTH OF MASSACHUSETTS
ROY E. SIMON
MECHANICAL
No. 43127
REGISTERED PROFESSIONAL ENGINEER

Consultants:
Kohler and Lewis
70 Island Street
Keene, NH 03431
603-352-4841

School Administration Offices

195 Federal Street
Greenfield, MA

HVAC Details

Revisions:

Date: April 27, 2016
File Name: xxx
Drawn By: mb
Reviewed By: RES
Scale: None

Drawing No.

M1.2

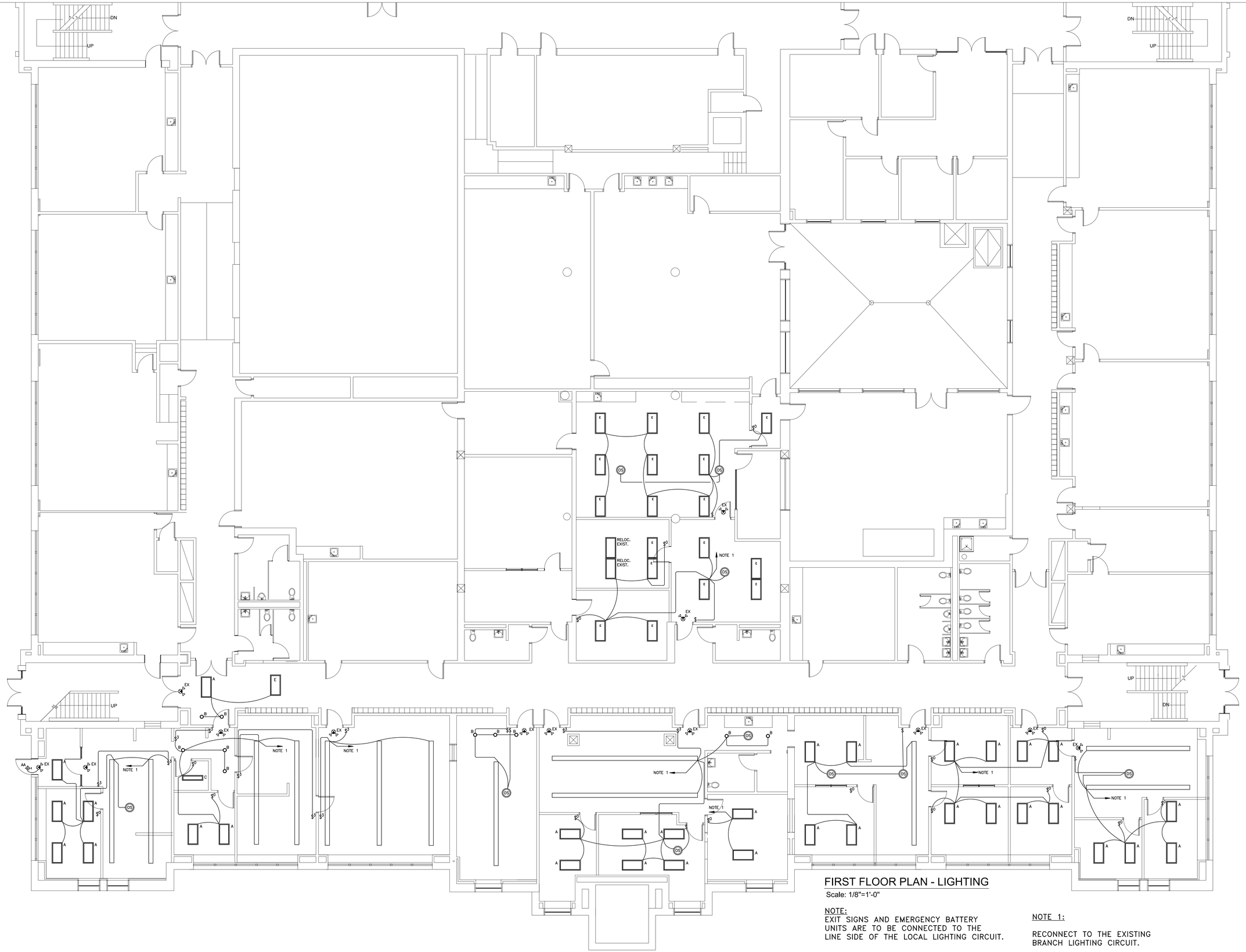

FIRST FLOOR PLAN - LIGHTING

Scale: 1/8"=1'-0"

NOTE:
EXIT SIGNS AND EMERGENCY BATTERY UNITS ARE TO BE CONNECTED TO THE LINE SIDE OF THE LOCAL LIGHTING CIRCUIT.

NOTE 1:

RECONNECT TO THE EXISTING BRANCH LIGHTING CIRCUIT.

JABLONSKI DeVRIESE
ARCHITECTS
www.jdarchitects.com

member: American Institute of Architects

29 Elliot Street | Springfield, MA 01105
T 413.747.5285

Consultants:
Kohler and Lewis
70 Island Street Keene, NH 03431
603-352-4841

SHEPHERD ENGINEERING, INC.
ELECTRICAL CONSULTANTS
1308 GRAFTON STREET
WORCESTER, MASSACHUSETTS 01604
PHONE: (508) 757-7793 * FAX: (508) 753-2309
REFERENCE NO.: 16055

School Administration Offices

195 Federal Street
Greenfield, MA

First Floor Plan - Lighting

Revisions:

Date:	04/27/16
File Name:	xxx
Drawn By:	AJV
Reviewed By:	JDS
Scale:	1/8" = 1'-0"

Drawing No.

E1.1

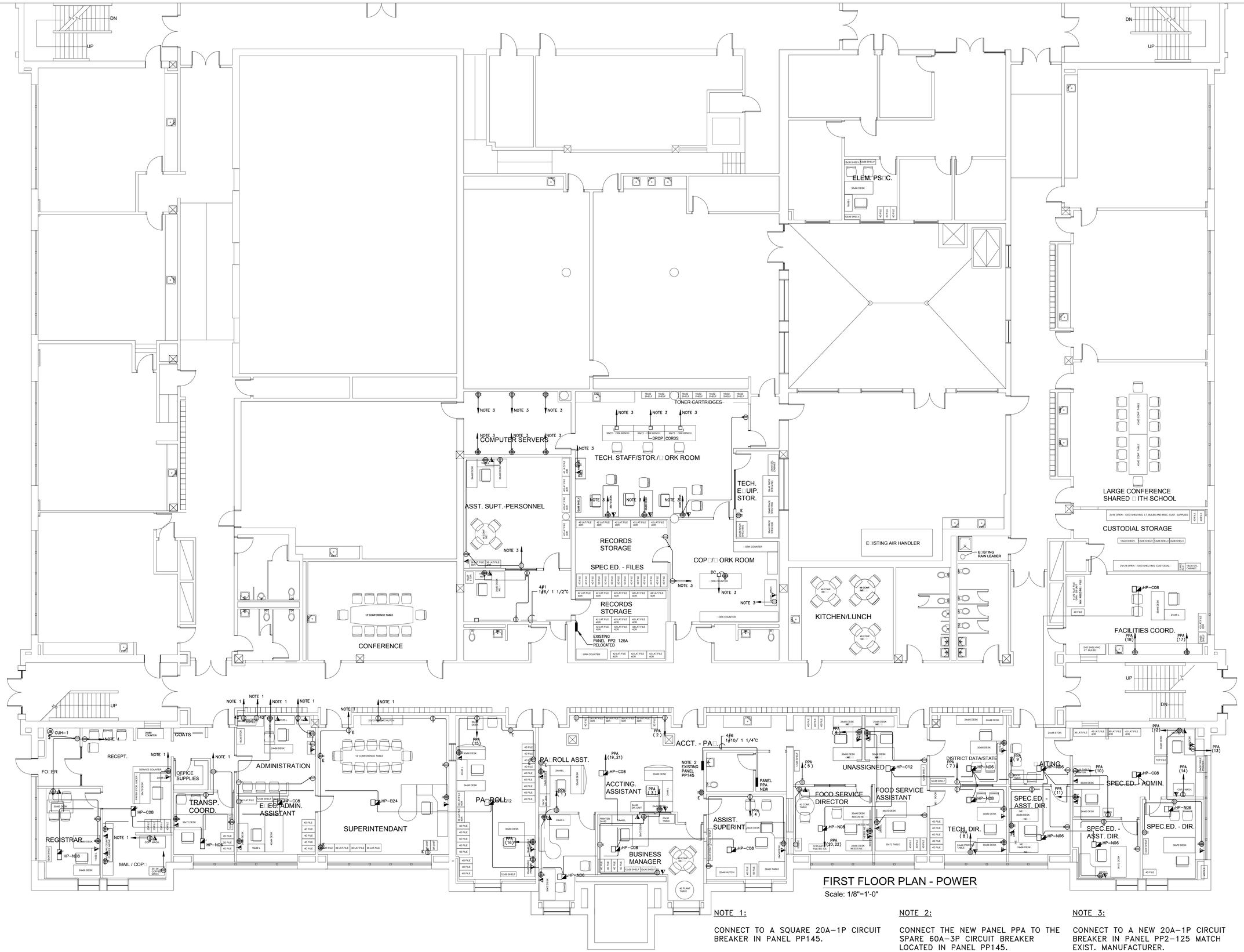

FIRST FLOOR PLAN - POWER

Scale: 1/8"=1'-0"

NOTE 1:

CONNECT TO A SQUARE 20A–1P CIRCUIT BREAKER IN PANEL PP145.

NOTE 2:

CONNECT THE NEW PANEL PPA TO THE SPARE 60A–3P CIRCUIT BREAKER LOCATED IN PANEL PP145.

NOTE 3:

CONNECT TO A NEW 20A–1P CIRCUIT BREAKER IN PANEL PP2–125 MATCH EXIST. MANUFACTURER.

JABLONSKI DeVRIESE
ARCHITECTS
www.jdarchitects.com

member: American Institute of Architects

29 Elliot Street | Springfield, MA 01105
T 4 1 3.7 4 7.5 2 8 5

Consultants:

Kohler and Lewis
70 Island Street Keene, NH 03431
603-352-4841

SHEPHERD ENGINEERING, INC.
ELECTRICAL CONSULTANTS
1308 GRAFTON STREET
WORCESTER, MASSACHUSETTS 01604
PHONE: (508) 757-7793 * FAX: (508) 753-2309
REFERENCE NO.: 16055

School Administration Offices

195 Federal Street
Greenfield, MA

First Floor Plan - Power

Revisions:

Date:	04/27/16
File Name:	xxx
Drawn By:	AJV
Reviewed By:	JDS
Scale:	1/8" = 1'-0"

Drawing No.

E1.2

LIGHTING FIXTURE SCHEDULE

TYPE	MANUFACTURER	CATALOGUE #	LAMPING			MOUNTING	REMARKS
			TYPE	WATTAGE	QUANTITY		
A	METALUX	24CZLD440UNVL835CD1U					
B	PORTFOLIO	LD6AD010TEERM6A158356LMOLIHB26					
C	METALUX	4SNLEDLD441SLLWUNVL835CD1U					
EX	ISOLITE	RLCLEDRWHSD					

LEGEND

- 2X4 LIGHT FIXTURE
- DOWN LIGHT/CELING FIXTURE
- WALL MOUNTED FIXTURE
- EXIT SIGN/EMERGENCY BATTERY UNIT
- EMERGENCY BATTERY UNIT
- $ SINGLE POLE SWITCH
- $3 THREE WAY SWITCH
- $O WALL-MOUNTED MOTION SENSOR
- CEILING-MOUNTED MOTION SENSOR
- DUPLEX RECEPTACLE
- DOUBLE DUPLEX RECEPTACLE
- GFI GFI RECEPTACLE
- SPECIAL OUTLET (SEE DRAWINGS)
- PANEL
- HOMERUN TO PANEL
- TEL/DATA OUTLET
- F PULL STATION
- S SMOKE DETECTOR
- H HORN/STROBE

PANEL: PPA — 10KAIC

MAIN: 100A MLO
VOLTAGE: 120/208V PHASE: 3 WIRE: 4
TYPE: SIEMANS CO. OR EQUAL SURFACE

CIR	DESCRIPTION	TRIP	POLE	CIR	DESCRIPTION	TRIP	POLE
1	ACCOUNTING OFFICE	20	1	2	ACCOUNTING OFFICE	20	1
3	BUSINESS MANAGER	20	1	4	ASST. SUPERINTENDANT	20	1
5	FOOD SERVICE	20	1	6	FOOD SERVICE	20	1
7	TECH. DIRECTOR	20	1	8	TECH. DIRECTOR	20	1
9	SPEC. ED OFF.	20	1	10	SPEC. ED ADM	20	1
11	SPEC. ED ADM	20	1	12	SPEC. ED DIR.	20	1
13	SPEC. ED ADM	20	1	14	SPEC. ED ADM PRINTER	20	1
15	PAYROLL	20	1	16	PAYROLL	20	1
17	FAC. COORD.	20	1	18	FAC. COORD.	20	1
19				20			
21				22			
23	SPARE	20	1	24	SPARE	20	1
25	SPARE	20	1	26	SPARE	20	1
27	SPARE	20	1	28	SPARE	20	1
29	SPARE	20	1	30	SPARE	20	1

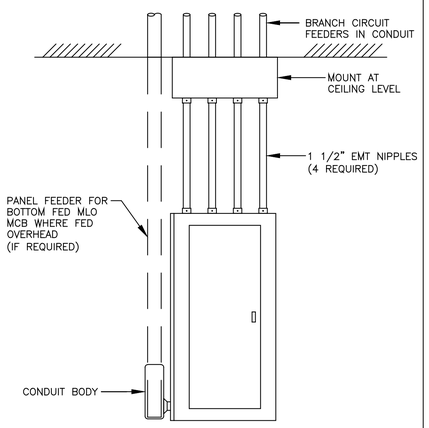

PANELBOARD ENCLOSURE DETAIL
SCALE: N.T.S.

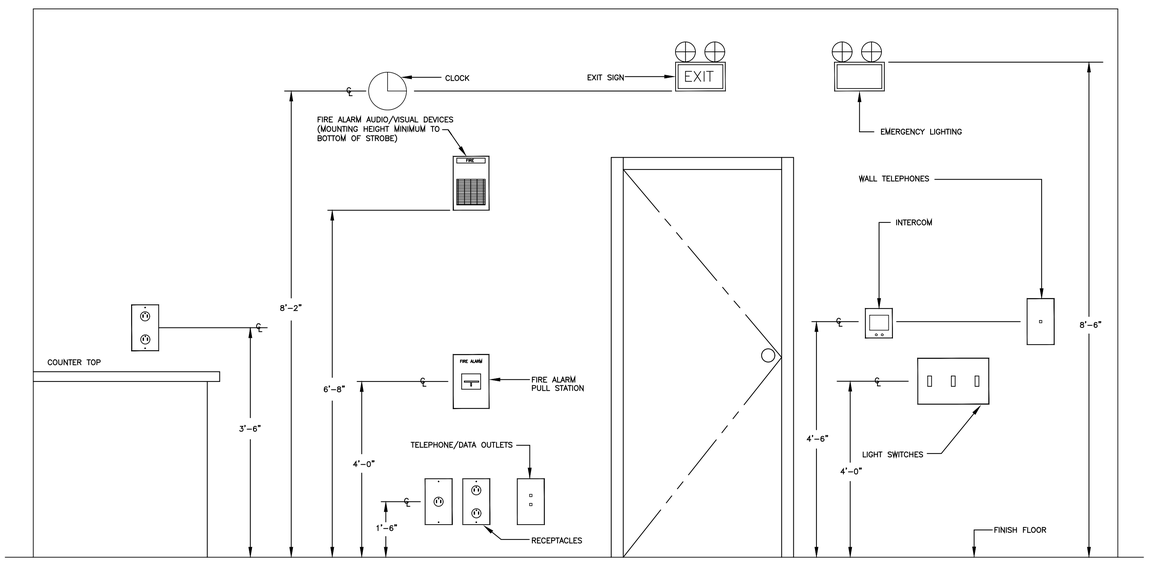

DEVICE LOCATION HEIGHTS
NOT TO SCALE

NOTES:
ALL MOUNTING HEIGHTS SHALL BE MEASURED FROM THE FINISH FLOOR TO THE CENTERLINE OF THE DEVICE EXCEPT EXIT SIGNS, CLOCKS, EMERGENCY LIGHTING AND FIRE ALARM A/V DEVICES.

DEVICES SHALL BE INSTALLED ON A COMMON VERTICAL CENTERLINE WHEREVER POSSIBLE.

ALL DEVICES SHALL BE INSTALLED AT MOUNTING HEIGHTS AS INDICATED UNLESS OTHERWISE NOTED.

STROBE HEIGHT ILLUSTRATED AT MAXIMUM HEIGHT. STROBE SHALL BE 80" AFF OR 6" BELOW CEILING, WHICHEVER IS LOWER.

JABLONSKI DEVRIESE
ARCHITECTS
www.jdarchitects.com

member: American Institute of Architects

29 Elliot Street | Springfield, MA 01105
T 413.747.5285

Consultants:
Kohler and Lewis
70 Island Street Keene, NH 03431
603-352-4841

SHEPHERD ENGINEERING, INC.
ELECTRICAL CONSULTANTS
1308 GRAFTON STREET
WORCESTER, MASSACHUSETTS 01604
PHONE: (508) 757-7793 * FAX: (508) 753-2309
REFERENCE NO.: 16055

School Administration Offices

195 Federal Street
Greenfield, MA

Legend, Schedules and Details

Revisions:

Date: 04/27/16
File Name: xxx
Drawn By: AJV
Reviewed By: JDS
Scale: N.T.S

Drawing No.

E2.1

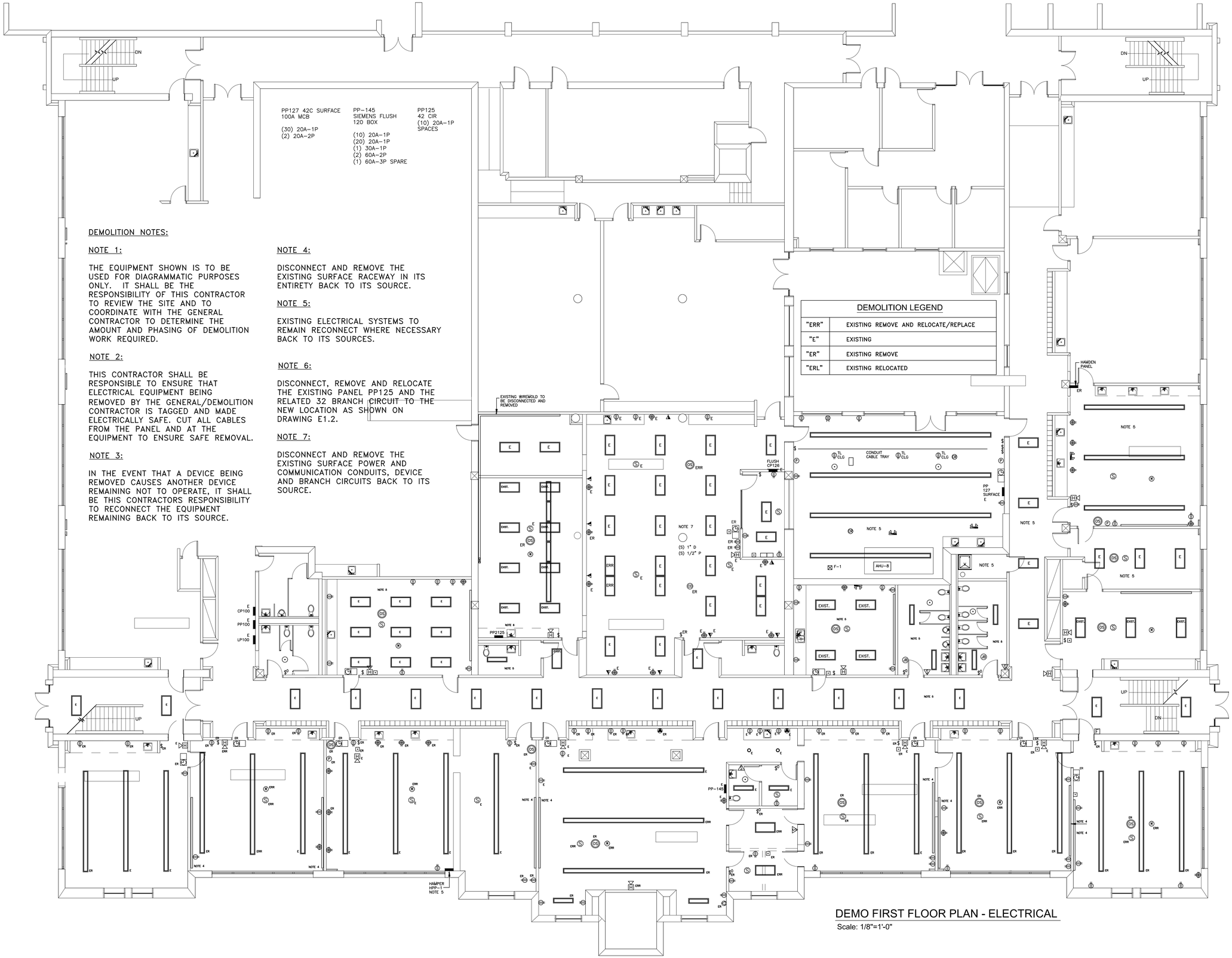

DEMOLITION NOTES:

NOTE 1:

THE EQUIPMENT SHOWN IS TO BE USED FOR DIAGRAMMATIC PURPOSES ONLY. IT SHALL BE THE RESPONSIBILITY OF THIS CONTRACTOR TO REVIEW THE SITE AND TO COORDINATE WITH THE GENERAL CONTRACTOR TO DETERMINE THE AMOUNT AND PHASING OF DEMOLITION WORK REQUIRED.

NOTE 2:

THIS CONTRACTOR SHALL BE RESPONSIBLE TO ENSURE THAT ELECTRICAL EQUIPMENT BEING REMOVED BY THE GENERAL/DEMOLITION CONTRACTOR IS TAGGED AND MADE ELECTRICALLY SAFE. CUT ALL CABLES FROM THE PANEL AND AT THE EQUIPMENT TO ENSURE SAFE REMOVAL.

NOTE 3:

IN THE EVENT THAT A DEVICE BEING REMOVED CAUSES ANOTHER DEVICE REMAINING NOT TO OPERATE, IT SHALL BE THIS CONTRACTORS RESPONSIBILITY TO RECONNECT THE EQUIPMENT REMAINING BACK TO ITS SOURCE.

NOTE 4:

DISCONNECT AND REMOVE THE EXISTING SURFACE RACEWAY IN ITS ENTIRETY BACK TO ITS SOURCE.

NOTE 5:

EXISTING ELECTRICAL SYSTEMS TO REMAIN RECONNECT WHERE NECESSARY BACK TO ITS SOURCES.

NOTE 6:

DISCONNECT, REMOVE AND RELOCATE THE EXISTING PANEL PP125 AND THE RELATED 32 BRANCH CIRCUIT TO THE NEW LOCATION AS SHOWN ON DRAWING E1.2.

NOTE 7:

DISCONNECT AND REMOVE THE EXISTING SURFACE POWER AND COMMUNICATION CONDUITS, DEVICE AND BRANCH CIRCUITS BACK TO ITS SOURCE.

DEMOLITION LEGEND

"ERR"	EXISTING REMOVE AND RELOCATE/REPLACE
"E"	EXISTING
"ER"	EXISTING REMOVE
"ERL"	EXISTING RELOCATED

DEMO FIRST FLOOR PLAN - ELECTRICAL

Scale: 1/8"=1'-0"

JABLONSKI DeVRIESE
ARCHITECTS
www.jdarchitects.com

member: American Institute of Architects

29 Elliot Street | Springfield, MA 01105
T 413.747.5285

Consultants:
Kohler and Lewis
70 Island Street Keene, NH 03431
603-352-4841

SHEPHERD ENGINEERING, INC.
ELECTRICAL CONSULTANTS
1308 GRAFTON STREET
WORCESTER, MASSACHUSETTS 01604
PHONE: (508) 757-7793 * FAX: (508) 753-2309
REFERENCE NO.: 16055

School Administration Offices

195 Federal Street
Greenfield, MA

Demo
First Floor Plan - Electrical

Revisions:

Date:	04/27/16
File Name:	xxx
Drawn By:	AJV
Reviewed By:	JDS
Scale:	1/8" = 1'-0"

Drawing No.

ED.1

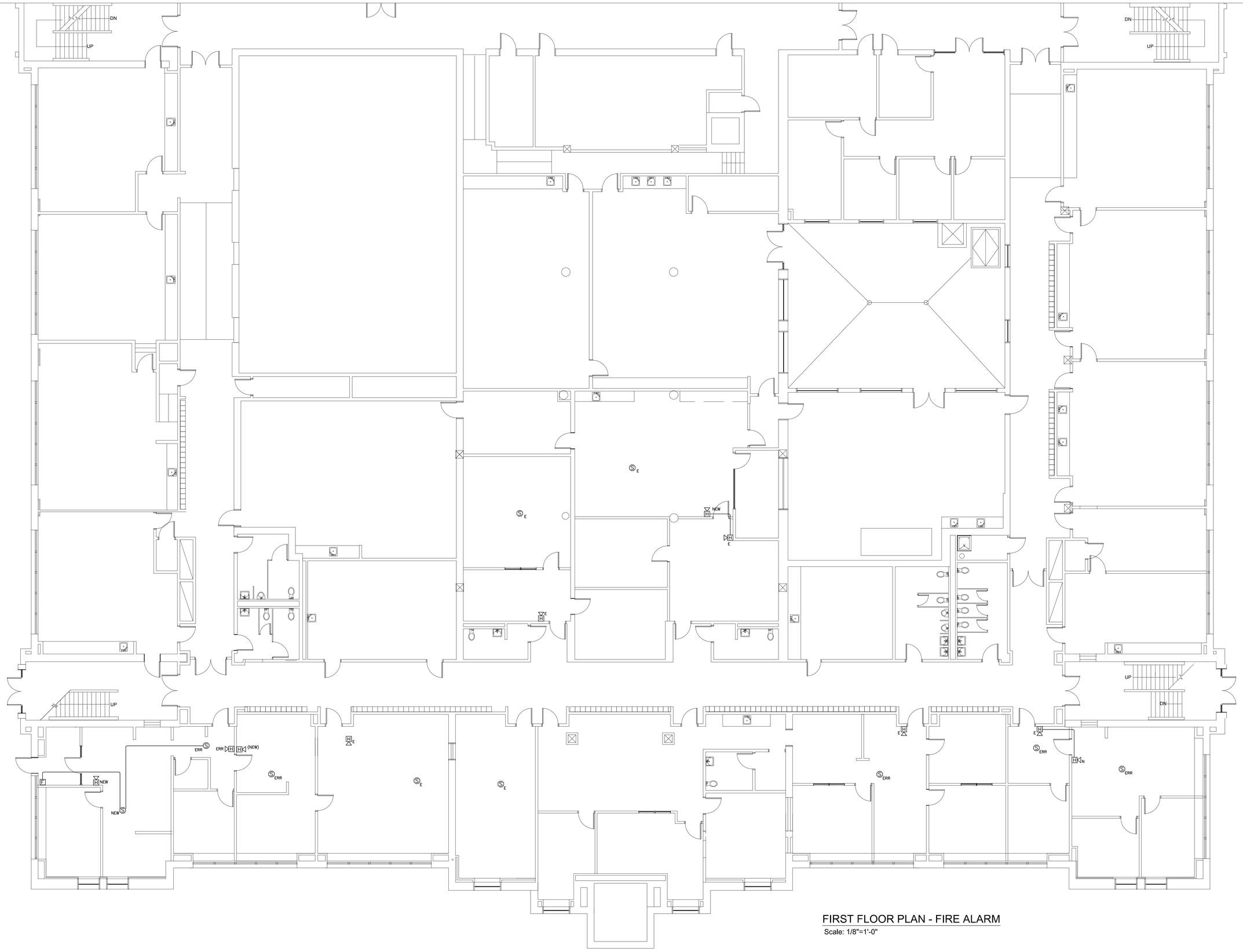

FIRST FLOOR PLAN - FIRE ALARM

Scale: 1/8"=1'-0"

JABLONSKI DeVRIESE
ARCHITECTS
www.jdarchitects.com

member: American Institute of Architects

29 Elliot Street | Springfield, MA 01105
T 413.747.5285

Consultants:

Kohler and Lewis
70 Island Street Keene, NH 03431
603-352-4841

SHEPHERD ENGINEERING, INC.
ELECTRICAL CONSULTANTS
1308 GRAFTON STREET
WORCESTER, MASSACHUSETTS 01604
PHONE: (508) 757-7793 * FAX: (508) 753-2309
REFERENCE NO.: 16055

School Administration Offices

195 Federal Street
Greenfield, MA

First Floor Plan - Fire Alarm

Revisions:

Date:	04/27/16
File Name:	xxx
Drawn By:	AJV
Reviewed By:	JDS
Scale:	1/8" = 1'-0"

Drawing No.

FA.1

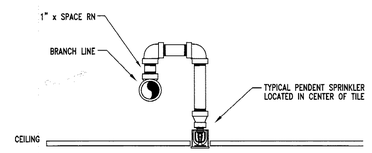

1 TYPICAL RETURN BEND
SCALE: N.T.S.

REI05501.DWG

SECTION 210000 – FIRE SPRINKLERS

PART 1 GENERAL

1.1 Scope of work

A. The sprinkler system is to be updated with the following items;
   1. All sprinklers must be adjusted to meet obstruction and coverage criteria of NFPA 13.
   2. All sprinklers shall be replaced with standard spray sprinklers. See drawing for response type.
   3. All sprinklers shall have a minimum temperature of 200F.

B. The work includes the furnishing of all labor, materials, equipment services and tests necessary to provide a complete Fire Suppression System as shown on drawing FP0, FP1, and as specified herein and as required by job conditions.

C. System shall be in strict accordance with National Fire Protection Association's Pamphlet 13, 2013 edition.

D. Included, but not limited to, are the following major items:
   1. Provide all penetrations in walls and floors and provide sleeves when penetration is through a bearing wall, footing, floor or fire rated wall.
   2. Permits.
      a) Obtain a Fire Sprinkler Permit for this contract.
      b) Obtain all necessary permits.
   3. Perform all system tests and inspections as required.
   4. Drawings are intended to show the general arrangement and extent of work to be done. The locations given are approximate and are subject to modification as may be found necessary to meet any structural or job conditions. The Sprinkler Contractor is to visit the job site to verify all dimensions and job conditions. Contractor shall coordinate his work with other trades.

1.2 Related documents

A. National Fire Protection Association's Pamphlet 13, 2013 edition.

B. 780 CMR, Massachusetts State Building Code, 8th Edition

1.3 QUALITY ASSURANCE

A. Perform Work in accordance with NFPA 13 2013 edition.

B. The installation shall be accomplished by an authorized Fire Protection Contractor, recognized as a fully experienced specialist in Automatic Fire Sprinkler Systems and other Fire Protection Equipment. All appropriate licensing requirements shall be met.

1.4 CLOSEOUT SUBMITTALS

A. Project Record Documents
   1. A complete set of record drawings shall be submitted to the owner upon completion of the project. Drawings shall include:
      a) Field modifications to shop drawings
      b) Location of any drains added to the system

Operation and Maintenance Data: Submit description of components of system, servicing requirements, record drawings, inspection data, and parts lists.

1.5 WARRANTY

A. The Sprinkler Contractor shall guarantee all parts of his work for a period of one year from the date of acceptance of the job by the Owner. If, during that period of general guarantee, any part of the work installed under this contract fails, becomes unsatisfactory or does not function properly due to any fault in material or workmanship, whether or not manufactured, built or installed by the Contractor, he shall, upon notice from the Owner, promptly proceed to repair or replace such faulty material or workmanship without expense to the Owner, including cutting, patching and painting, or other work involved, and including repair or restoration of any damaged sections of the premises resulting from such faults.

PART 2 PRODUCTS

2.1 General

A. Materials specified for the work on systems in the building shall be new and shall be manufactured in conformance with all prevailing codes or standards. Where materials are not specified, the Sprinkler Contractor shall furnish the best of the respective kind.

2.2 PIPE AND TUBE

A. All steel sprinkler piping to be ASTM A795, ASTM A53, ASTM A135, or ASME B36.10.

B. Sprinkler Systems
   1. Pipe shall be black steel.
   2. Sprinkler branch line piping 1" through 2" shall be Schedule #40 steel pipe with ductile iron screwed type fittings, or Schedule #10 with welded outlets and grooved fittings.
   3. Sprinkler main piping 2" and larger shall be Schedule #10 steel pipe with roll grooved ends, grooved type couplings and fittings, mechanical tees, or weld-o-lets.
   4. Flexible sprinkler piping allowed with hydraulic calculation submittal required.

PART 3 EXECUTION

3.1 INSTALLATION

A. The Sprinkler Contractor is required to investigate carefully the structure and finish conditions affecting his work accordingly. Any pipe or fitting required to complete his work and not shown on the sprinkler drawings shall be furnished at the Sprinkler Contractor's expense.

3.2 TESTING

A. All tests required shall be performed by the installer. The installer shall give the Local Authority Having Jurisdiction, and Rybak Engineering, Inc. advance notification of all tests. Contractor's Material and Test Certificate shall be completed and forwarded to the Authority Having Jurisdiction, and Rybak Engineering, Inc.

B. All tests shall be completed in strict accordance with NFPA Pamphlet No. 13, NFPA 72, and local Fire Marshall.

C. Entire system shall be hydrostatically tested at 200 PSI for a period of two (2) hours.

D. All alarm and supervisory switches shall be tested.

E. 2" drain test shall be conducted.

END OF SECTION

0 8' 16'
SCALE 1/8" = 1'-0"

PROJECT NOTES:

GENERAL NOTES:

1. The fire protection system shown on this plan has been designed and is to be installed in accordance with all applicable standards of the National Fire Codes, published by the National Fire Protection Association, NFPA 13, 2013 edition
2. Owner is to provide heat throughout all areas to prevent water in the system piping and valves from freezing.
3. All hangers and hanger locations to be in accordance with NFPA Pamphlet No. 13.
4. High temperature sprinkler heads to be installed in accordance with NFPA Pamphlet No. 13.
5. This drawing is intended to show the general arrangement and extent of work to be done. The locations given are approximate and are subject to modifications as may be found necessary to meet any structural or job conditions. The contractor is to visit the job site to verify all dimensions and job conditions.

SYMBOL	DESCRIPTION	QUAN.
●	Existing Quick response recessed pendent sprinkler	
⊙	NEW QR SSP RECESSED PENDENT SPRINKLER	90
	1/2" NPT, K=5.6, 200°F, FINISH TO MATCH EXIST HEADS	
○	EXISTING QR UPRIGHT SPRINKLER, SSU	
◀	EXISTING QR SIDEWALL SPRINKLER	
	NEW PIPE	
	EXISTING PIPING	
①②③	HYDRAULIC REFERENCE POINT	
	TYPICAL HANGER LOCATION	
	GROOVE TYPE COUPLING	
	FIRELOCK GROOVE TYPE COUPLING	

JABLONSKI | DEVRIESE
ARCHITECTS
www.jdarchitects.com

member: American Institute of Architects

29 Elliot Street | Springfield, MA 01105
T 413.747.5285

Consultants

RYBAK ENGINEERING, INC.
132 FOREST AVENUE
WARREN, MASSACHUSETTS 01083-0709
TEL: (413)-436-5500 FAX: (413)-436-5563
http://www.RYBAK-FPC.COM

COMMONWEALTH OF MASSACHUSETTS
CARL C. KOSLOWSKI
FIRE PROTECTION
No. 37810
REGISTERED PROFESSIONAL ENGINEER
4/25/16

School Administration Offices
195 Federal Street
Greenfield, MA

Details and Notes
Fire Protection

Revisions:

Date 04/27/16
File Name Greenfield Middle School
Drawn By
Reviewed By
Scale 1/8" = 1'-0"

Drawing No.

FP0.1

of

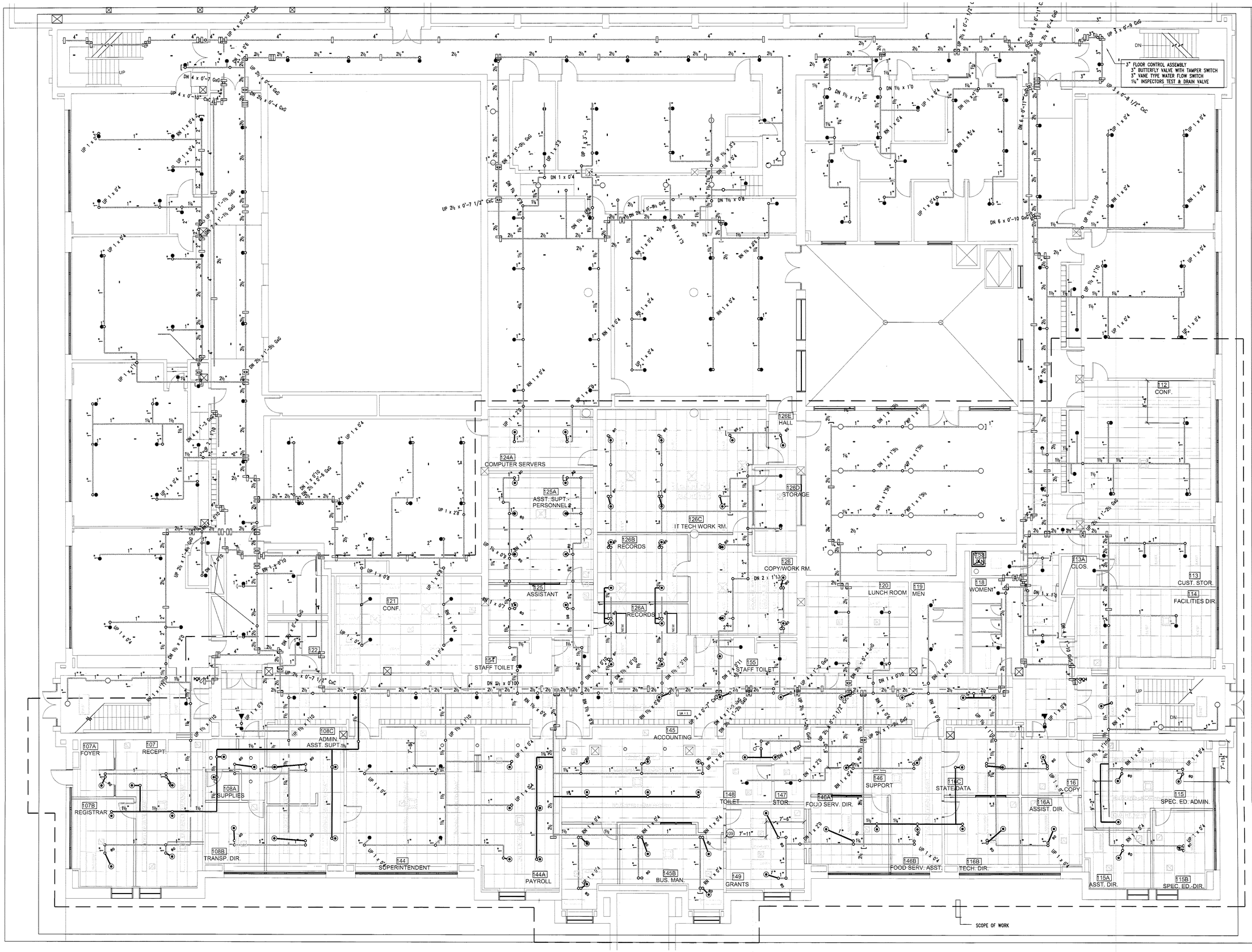

JABLONSKI | DEVRIESE
ARCHITECTS
www.jdarchitects.com

member: American Institute of Architects

29 Elliot Street | Springfield, MA 01105
T 413.747.5285

Consultants

RYBAK ENGINEERING, INC.
132 FOREST AVENUE
WARREN, MASSACHUSETTS 01083-0709
TEL: (413)-436-5500 FAX: (413)-436-5563
http://www.RYBAK-FPC.COM

COMMONWEALTH OF MASSACHUSETTS
KARL C. KOSLOWSKI
FIRE PROTECTION
No. 37810
REGISTERED PROFESSIONAL ENGINEER
4/27/16

School Administration Offices
195 Federal Street
Greenfield, MA

First Floor -West
Fire Protection

Revisions:

Date	04/27/16
File Name	Greenfield Middle School
Drawn By	
Reviewed By	
Scale	1/8" = 1'-0"

Drawing No.

FP1.1

of